STANDARDS OF THE

TUBULAR EXCHANGER

MANUFACTURERS ASSOCIATION

EIGHTH EDITION

TUBULAR EXCHANGER MANUFACTURERS ASSOCIATION, INC.
25 North Broadway
Tarrytown, New York 10591
Richard C. Byrne, Secretary
www.tema.org

NO WARRANTY
EXPRESSED OR IMPLIED

The Standards herein are recommended by The Tubular Exchanger Manufacturers Association, Inc. to assist users, engineers and designers who specify, design and install tubular exchangers. These standards are based upon sound engineering principles, research and field experience in the manufacture, design, installation and use of tubular exchangers. These standards may be subject to revision as further investigation or experience may show is necessary or desirable. Nothing herein shall constitute a warranty of any kind, expressed or implied, and warranty responsibility of any kind is expressly denied.

© Copyright 1968, 1970, 1972, 1974, 1978, 1986, 1987, 1988, 1999
Tubular Exchanger Manufacturers Association, Inc.

TEMA is a trademark of the Tubular Exchanger Manufacturers Association, Inc.

This document may not be copied, photocopied, reproduced, translated, modified or reduced to any electronic medium or machine-readable form in whole or in part, without prior written consent of the Tubular Exchanger Manufacturers Association, Inc.

ALL RIGHTS RESERVED

CONTRIBUTING MEMBERS
TUBULAR EXCHANGER MANUFACTURERS ASSOCIATION, INC.

Comprising Manufacturers of Various Types
of Shell and Tube Heat Exchanger Equipment

API Heat Transfer, Inc.	2777 Walden Avenue Buffalo, NY 14225
Cust-O-Fab, Inc.	8888 West 21st Street Sand Springs, OK 74063
Energy Exchanger Company	1844 N. Garnett Road Tulsa, OK 74116
Engineers and Fabricators Company	3501 West 11th Street Houston, TX 77008-60011
Fabsco Shell and Tube, L.L.C.	P.O. Box 988 Sapulpa, OK 74066
Graham Corporation	20 Florence Avenue Batavia, NY 14020
Heat Transfer Equipment Co.	P.O. Box 580638 Tulsa, OK 74158
Hughes-Anderson Heat Exchangers, Inc.	1001 N. Fulton Avenue Tulsa, OK 74115
ITT Standard, ITT Fluid Technology Corporation	P.O. Box 1102 Buffalo, NY 14227
Joseph Oat Corporation	2500 Broadway Camden, NJ 08104
Manning and Lewis Engineering Company	675 Rahway Avenue Union, NJ 07083
Nooter Corporation	P.O. Box 451 St. Louis, MO 63166
Ohmstede, Inc.	825 North Main Street Beaumont, TX 77701
RAS Process Equipment, Inc.	324 Meadowbrook Road Robbinsville, NJ 08691
Southern Heat Exchanger Corporation	P.O. Box 1850 Tuscaloosa, AL 35403
Struthers Industries, Inc.	1500 34th Street Gulfport, MS 39501
Wiegmann and Rose Subsidiary of Xchanger Mfg. Corp.	P.O. Box 4187 Oakland, CA 94614
Yuba Heat Transfer A Division of Connell Limited Partnership	P.O. Box 3158 Tulsa, OK 74101

TECHNICAL COMMITTEE
OF THE
TUBULAR EXCHANGER MANUFACTURERS ASSOCIATION

Ken O'Connor ..... API Heat Transfer, Inc.

Doug Werhane ..... Cust-O-Fab, Inc.

Ken Fultz ..... Energy Exchanger Company

Cris Smelley ..... Engineers and Fabricators Company

Philip Marks ..... Graham Corporation

Monte Davis ..... Heat Transfer Equipment Company

Jim Harrison ..... Hughes-Anderson Heat Exchangers, Inc.

Nick Tranquilli ..... ITT Standard

Michael Holtz ..... Joseph Oat Corporation

Ted Rapczynski ..... Manning and Lewis Engineering Co.

Steve Meierotto ..... Nooter Corporation

Michael Tracy ..... Ohmstede, Inc.
Russell Miller

Todd Allen ..... Southern Heat Exchanger Corp.
Dan Stenman

Gary L. Berry ..... Struthers Industries, Inc.

Jack E. Logan ..... Wiegmann and Rose
Subsidiary of Xchanger Mfg. Corp.

Larry Brumbaugh ..... Yuba Heat Transfer
A Division of Connell Limited Partnership

PREFACE

Eighth Edition - 1999

The Eighth Edition of the TEMA Standards was prepared by the Technical Committee of the Tubular Exchanger Manufacturers Association. A compilation of previously proven information, along with new additions to the Flow Induced Vibration, Flexible Shell Elements and Tubesheet Design sections is presented for your practical use.

Design methods for Floating Head Backing Devices have also been added and the scope has been changed to accommodate a larger range of sizes and pressures. Metric units and tables have been included wherever possible. Suggested methods have been included for support and lifting lug design in the RGP section.

This edition of the TEMA Standards is dedicated to the memory of Wayne Schaefer of the Nooter Corporation for his years of dedicated service to the TEMA Technical Committee.

The Editor also wishes to acknowledge the contributions to the Eighth Edition by the following past members of the Technical Committee: Victor J. Stachura, Joseph H. Kissel, Robert C. Moscicki and Harry W. Saultz.

Jim Harrison EDITOR

CONTENTS

Section	Symbol & Paragraph		
		MEMBERSHIP LIST	iii
		TECHNICAL COMMITTEE	iv
		PREFACE	v
		NOTES TO USERS	viii
1	N	NOMENCLATURE	
	1	Size Numbering and Type Designation—Recommended Practice	1
	2	Nomenclature of Heat Exchanger Components	3
2	F	FABRICATION TOLERANCES	
	1	External Dimensions, Nozzle and Support Locations	6
	2	Recommended Fabrication Tolerances	7
	3	Tubesheets, Partitions, Covers, and Flanges	8
	4	Flange Face Imperfections	9
3	G	GENERAL FABRICATION AND PERFORMANCE INFORMATION	
	1	Shop Operation	13
	2	Inspection	13
	3	Nameplates	13
	4	Drawings and ASME Code Data Reports	13
	5	Guarantees	14
	6	Preparation of Heat Exchangers for Shipment	15
	7	General Construction Features of TEMA Standard Heat Exchangers	15
4	E	INSTALLATION, OPERATION, AND MAINTENANCE	
	1	Performance of Heat Exchangers	17
	2	Installation of Heat Exchangers	17
	3	Operation of Heat Exchangers	18
	4	Maintenance of Heat Exchangers	19
5	RCB	MECHANICAL STANDARD TEMA CLASS RCB HEAT EXCHANGERS	
	1	Scope and General Requirements	23
	2	Tubes	27
	3	Shells and Shell Covers	30
	4	Baffles and Support Plates	31
	5	Floating End Construction	38
	6	Gaskets	43
	7	Tubesheets	45
	8	Flexible Shell Elements	75
	9	Channels, Covers, and Bonnets	88
	10	Nozzles	91
	11	End Flanges and Bolting	93
6	V	FLOW INDUCED VIBRATION	
	1	Scope and General	95
	2	Vibration Damage Patterns	95
	3	Failure Regions	95
	4	Dimensionless Numbers	96
	5	Natural Frequency	97
	6	Axial Tube Stress	104
	7	Effective Tube Mass	104
	8	Damping	107

CONTENTS

Section	Symbol & Paragraph		
6	V		FLOW INDUCED VIBRATION (continued)
		9	Shell Side Velocity Distribution 109
		10	Estimate of Critical Flow Velocity 112
		11	Vibration Amplitude 114
		12	Acoustic Vibration 116
		13	Design Considerations 121
		14	Selected References 122
7	T		THERMAL RELATIONS
		1	Scope and Basic Relations 124
		2	Fouling 125
		3	Fluid Temperature Relations 126
		4	Mean Metal Temperatures of Shell and Tubes 128
8	P		PHYSICAL PROPERTIES OF FLUIDS
		1	Fluid Density 150
		2	Specific Heat 150
		3	Heat Content of Petroleum Fractions 151
		4	Thermal Conductivity 151
		5	Viscosity 151
		6	Critical Properties 152
		7	Properties of Gas and Vapor Mixtures 152
		8	Selected References 153
9	D		GENERAL INFORMATION
			(See detailed Table of Contents) 183
10	RGP		RECOMMENDED GOOD PRACTICE
	G-7.11		Horizontal Vessel Supports 253
	G-7.12		Vertical Vessel Supports 267
	G-7.2		Lifting Lugs 269
	G-7.3		Wind and Seismic Design 273
	RCB-2		Plugging Tubes in Tube Bundle 273
	RCB-4		Entrance and Exit Areas 274
	RCB-6		Gaskets 279
	RCB-7		Tubesheets 279
	RCB-9		Channels, Covers, and Bonnets 280
	RCB-10		Nozzles 281
	RCB-11		End Flanges and Bolting 281
	T-2		Fouling 283
			INDEX 291

NOTES TO USERS OF

THE TEMA STANDARDS

Three classes of Mechanical Standards, R,C and B, reflecting acceptable designs for various service applications are presented. The user should refer to the definition of each class and choose the one that best fits the specific need.

Corresponding subject matter in the three Mechanical Standards is covered by paragraphs identically numbered except for the prefix letter. Paragraph numbers preceded by RCB indicates that all three classes are identical. Any reference to a specific paragraph must be preceded by the class designation.

The Recommended Good Practice section has been prepared to assist the designer in areas outside the scope of the basic Standards. Paragraphs in the Standards having additional information in the RGP section are marked with an asterisk (*). The reference paragraph in the RGP section has the identical paragraph number, but with an "RGP" prefix.

It is the intention of the Tubular Exchanger Manufacturers Association that this edition of its Standards may be used beginning with the date of issuance, and that its requirements supersede those of the previous edition six months from such date of issuance, except for heat exchangers contracted for prior to the end of the six month period. For this purpose the date of issuance is June 1, 1999.

Questions on interpretation of the TEMA Standards should be formally addressed to the Secretary at TEMA 25 North Broadway, Tarrytown, NY 10591. Questions requiring development of new or revised technical information will only be answered through an addendum or a new edition of the Standards.

Upon agreement between purchaser and fabricator, exceptions to TEMA requirements are acceptable. An exchanger may still be considered as meeting TEMA requirements as long as the exception is documented.

N-1 SIZE NUMBERING AND TYPE DESIGNATION--RECOMMENDED PRACTICE

It is recommended that heat exchanger size and type be designated by numbers and letters as described below.

N-1.1 SIZE

Sizes of shells (and tube bundles) shall be designated by numbers describing shell (and tube bundle) diameters and tube lengths, as follows:

N-1.11 NOMINAL DIAMETER

The nominal diameter shall be the inside diameter of the shell in inches (mm), rounded off to the nearest integer. For kettle reboilers the nominal diameter shall be the port diameter followed by the shell diameter, each rounded off to the nearest integer.

N-1.12 NOMINAL LENGTH

The nominal length shall be the tube length in inches (mm). Tube length for straight tubes shall be taken as the actual overall length. For U-tubes the length shall be taken as the approximate straight length from end of tube to bend tangent.

N-1.2 TYPE

Type designation shall be by letters describing stationary head, shell (omitted for bundles only), and rear head, in that order, as indicated in Figure N-1.2.

N-1.3 TYPICAL EXAMPLES

N-1.31

Split-ring floating head exchanger with removable channel and cover, single pass shell, 23-1/4" (591 mm) inside diameter with tubes 16'(4877 mm) long. SIZE 23-192 (591-4877) TYPE AES.

N-1.32

U-tube exchanger with bonnet type stationary head, split flow shell, 19" (483 mm) inside diameter with tubes 7'(2134 mm) straight length. SIZE 19-84 (483-2134) TYPE BGU.

N-1.33

Pull-through floating head kettle type reboiler having stationary head integral with tubesheet, 23" (584 mm) port diameter and 37" (940 mm) inside shell diameter with tubes 16'(4877 mm) long. SIZE 23/37-192 (584/940 - 4877) TYPE CKT.

N-1.34

Fixed tubesheet exchanger with removable channel and cover, bonnet type rear head, two pass shell, 33-1/8" (841 mm) inside diameter with tubes 8'(2438 mm) long. SIZE 33-96 (841-2438) TYPE AFM.

N-1.35

Fixed tubesheet exchanger having stationary and rear heads integral with tubesheets, single pass shell, 17" (432 mm) inside diameter with tubes 16'(4877 mm) long. SIZE 17-192 (432-4877) TYPE NEN.

N-1.4 SPECIAL DESIGNS

Special designs are not covered and may be described as best suits the manufacturer. For example, a single tube pass, fixed tubesheet exchanger with conical heads may be described as "TYPE BEM with Conical Heads". A pull-through floating head exchanger with an integral shell cover may be described as "TYPE AET with Integral Shell Cover".

FIGURE N-1.2

	FRONT END STATIONARY HEAD TYPES
A	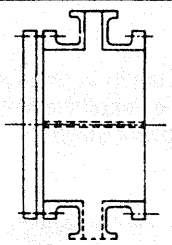 CHANNEL AND REMOVABLE COVER
B	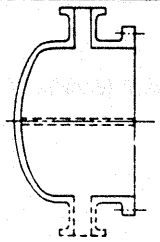 BONNET (INTEGRAL COVER)
C	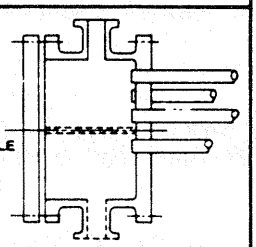 CHANNEL INTEGRAL WITH TUBE-SHEET AND REMOVABLE COVER
N	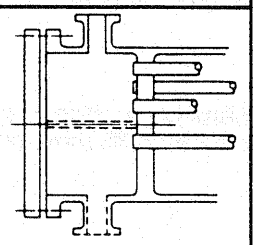 CHANNEL INTEGRAL WITH TUBE-SHEET AND REMOVABLE COVER
D	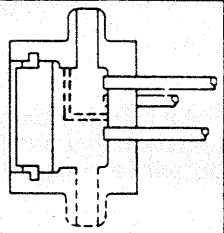 SPECIAL HIGH PRESSURE CLOSURE

	SHELL TYPES
E	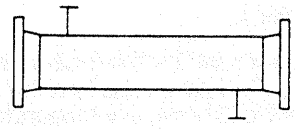 ONE PASS SHELL
F	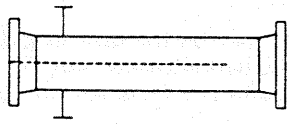 TWO PASS SHELL WITH LONGITUDINAL BAFFLE
G	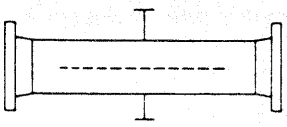 SPLIT FLOW
H	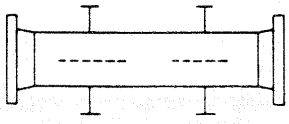 DOUBLE SPLIT FLOW
J	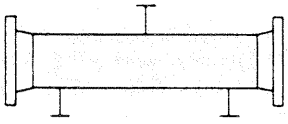 DIVIDED FLOW
K	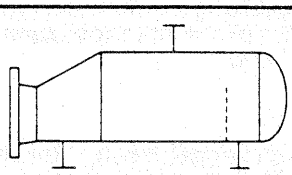 KETTLE TYPE REBOILER
X	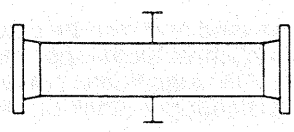 CROSS FLOW

	REAR END HEAD TYPES
L	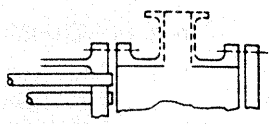 FIXED TUBESHEET LIKE "A" STATIONARY HEAD
M	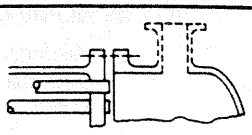 FIXED TUBESHEET LIKE "B" STATIONARY HEAD
N	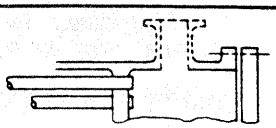 FIXED TUBESHEET LIKE "N" STATIONARY HEAD
P	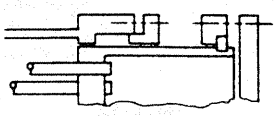 OUTSIDE PACKED FLOATING HEAD
S	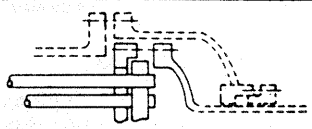 FLOATING HEAD WITH BACKING DEVICE
T	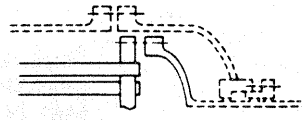 PULL THROUGH FLOATING HEAD
U	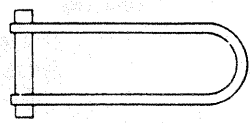 U-TUBE BUNDLE
W	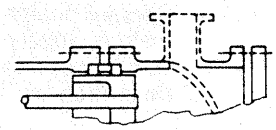 EXTERNALLY SEALED FLOATING TUBESHEET

N-2 NOMENCLATURE OF HEAT EXCHANGER COMPONENTS

For the purpose of establishing standard terminology, Figure N-2 illustrates various types of heat exchangers. Typical parts and connections, for illustrative purposes only, are numbered for identification in Table N-2.

TABLE N-2

1. Stationary Head-Channel
2. Stationary Head-Bonnet
3. Stationary Head Flange-Channel or Bonnet
4. Channel Cover
5. Stationary Head Nozzle
6. Stationary Tubesheet
7. Tubes
8. Shell
9. Shell Cover
10. Shell Flange-Stationary Head End
11. Shell Flange-Rear Head End
12. Shell Nozzle
13. Shell Cover Flange
14. Expansion Joint
15. Floating Tubesheet
16. Floating Head Cover
17. Floating Head Cover Flange
18. Floating Head Backing Device
19. Split Shear Ring
20. Slip-on Backing Flange
21. Floating Head Cover-External
22. Floating Tubesheet Skirt
23. Packing Box
24. Packing
25. Packing Gland
26. Lantern Ring
27. Tierods and Spacers
28. Transverse Baffles or Support Plates
29. Impingement Plate
30. Longitudinal Baffle
31. Pass Partition
32. Vent Connection
33. Drain Connection
34. Instrument Connection
35. Support Saddle
36. Lifting Lug
37. Support Bracket
38. Weir
39. Liquid Level Connection
40. Floating Head Support

FIGURE N-2

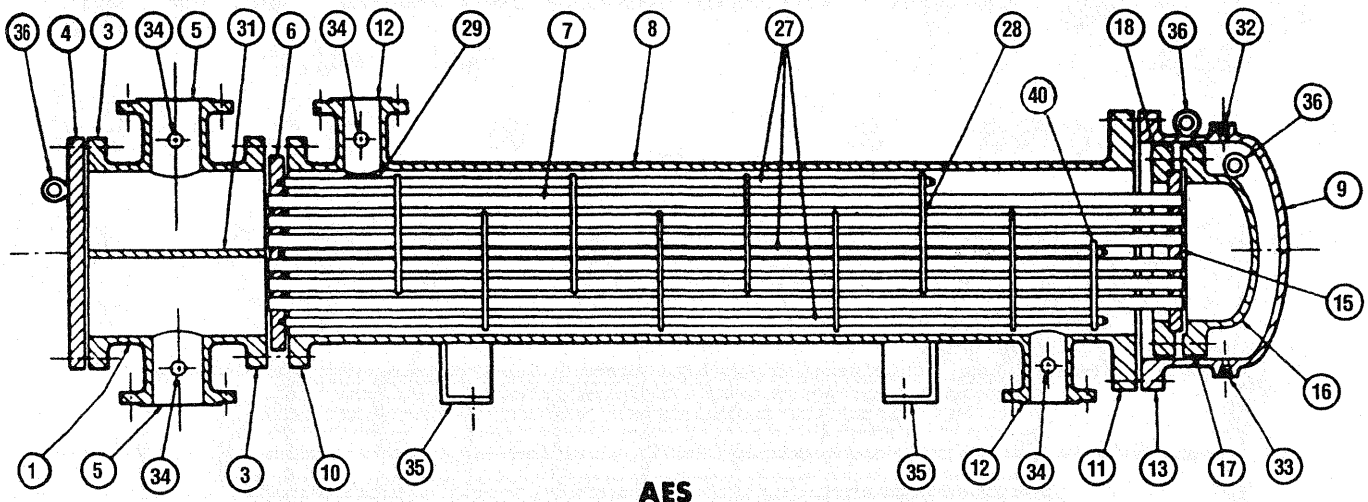

AES

FIGURE N-2 (continued)

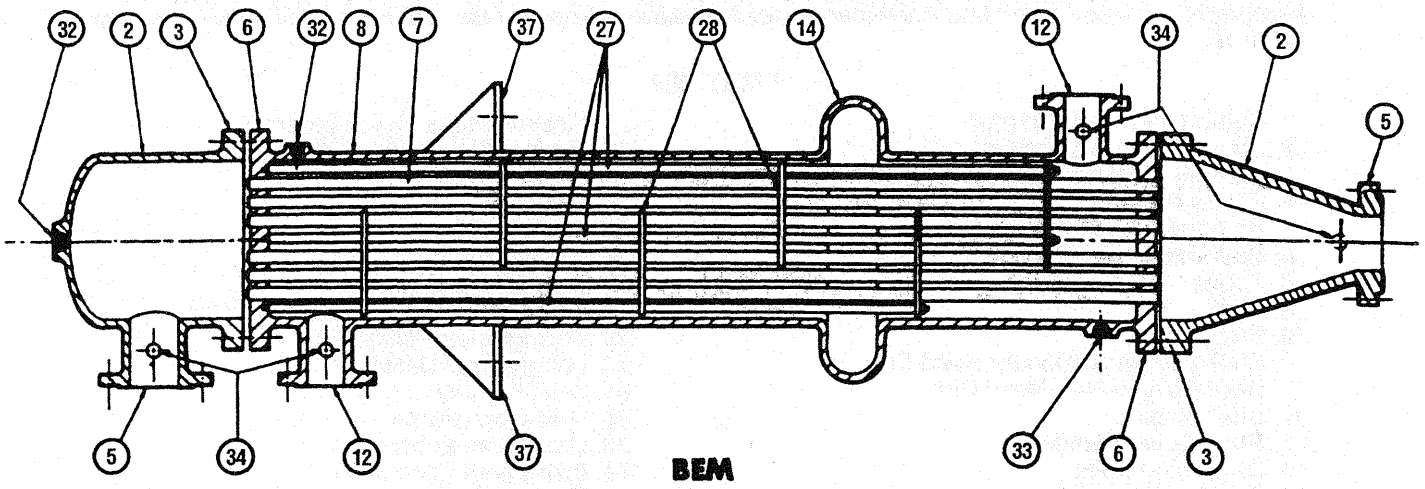

BEM

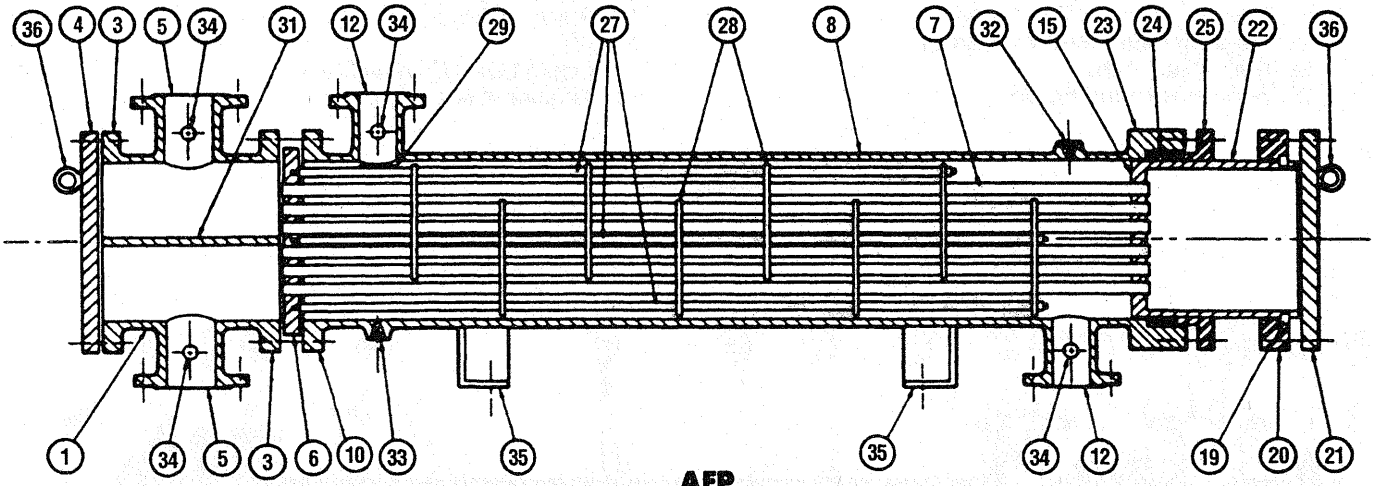

AEP

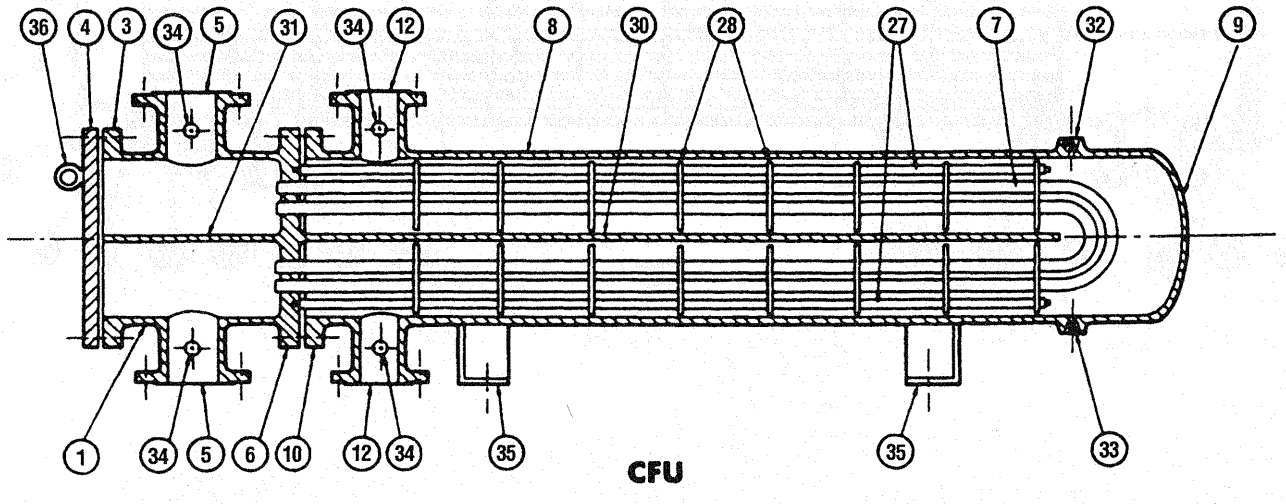

CFU

FIGURE N-2 (continued)

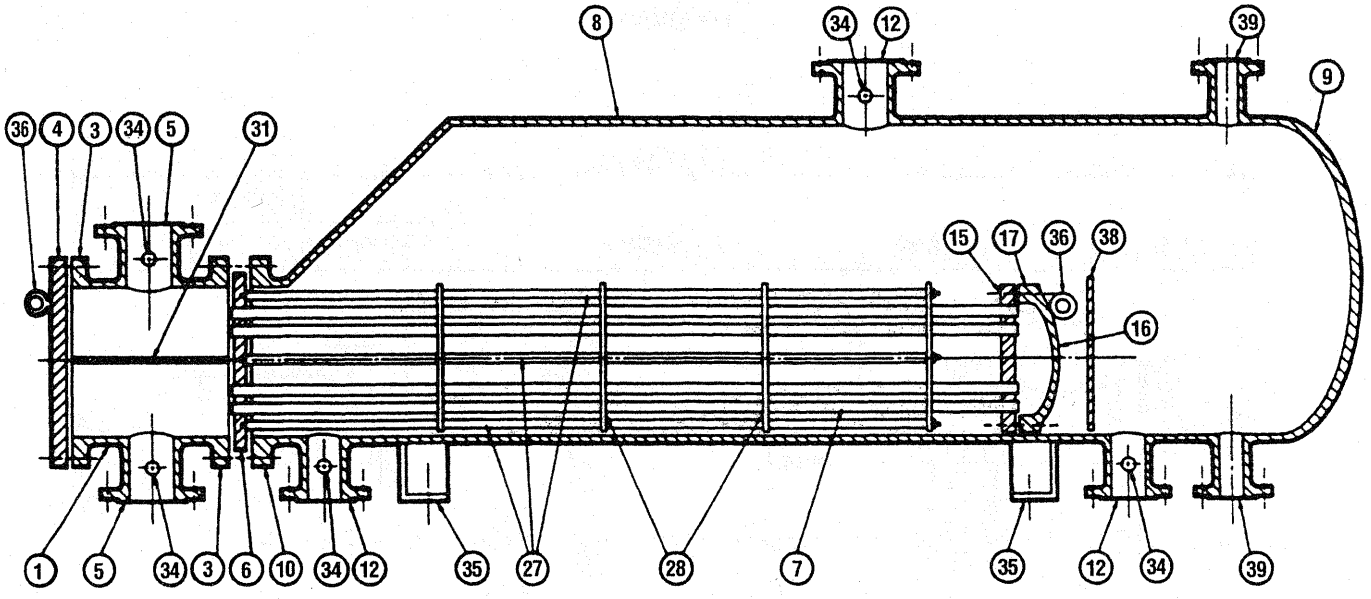

AKT

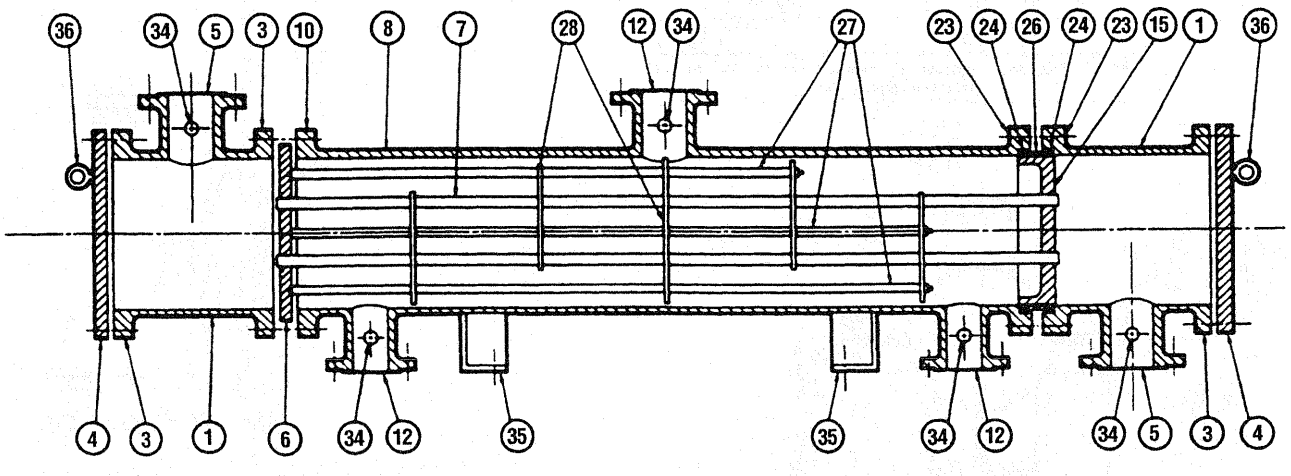

AJW

SECTION 2 HEAT EXCHANGER FABRICATION TOLERANCES

F-1 EXTERNAL DIMENSIONS, NOZZLE AND SUPPORT LOCATIONS

Standard tolerances for process flow nozzles and support locations and projections are shown in Figure F-1. Dimensions in ( ) are millimeters.

FIGURE F-1

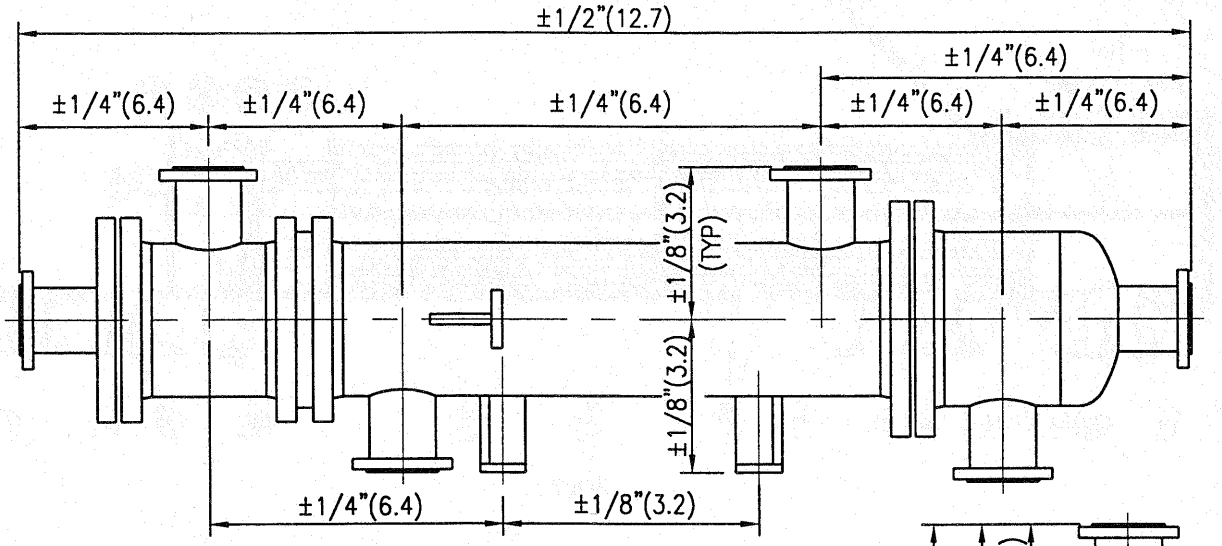

NOMINAL NOZZLE SIZE	G MAX
2"–4" INCLUSIVE	1/16"(1.6)
6"–12" INCLUSIVE	3/32"(2.4)
14"–36" INCLUSIVE	3/16"(4.8)
OVER 36"	1/4"(6.4)
NOTE: This table applies to nozzles connecting to external piping only.	

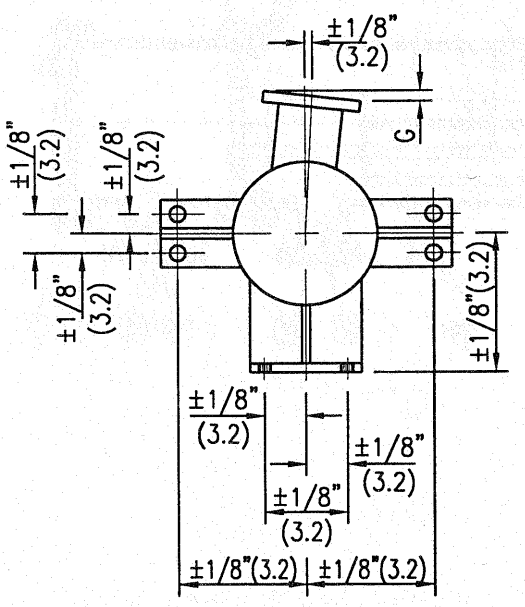

CONNECTION NOZZLE ALIGNMENT AND SUPPORT TOLERANCES

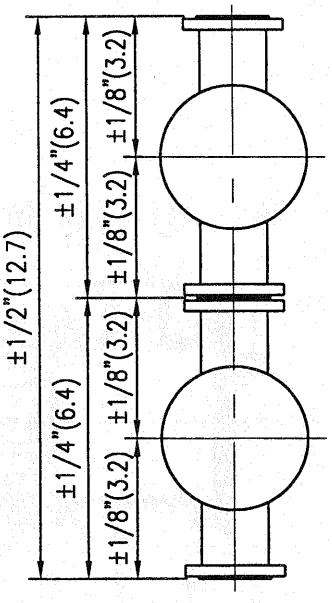

STACKED EXCHANGERS

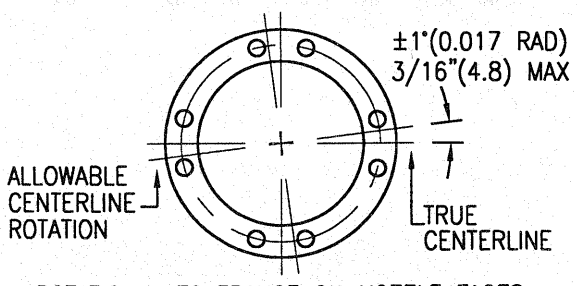

ROTATIONAL TOLERANCE ON NOZZLE FACES AT BOLT CIRCLE

F-2 RECOMMENDED FABRICATION TOLERANCES

Fabrication tolerances normally required to maintain process flow nozzle and support locations are shown in Figure F-2. These tolerances may be adjusted as necessary to meet the tolerances shown in Figure F-1. Dimensions in ( ) are millimeters.

FIGURE F-2

