ASME BOILER AND PRESSURE VESSEL CODE
AN INTERNATIONAL CODE

RULES FOR CONSTRUCTION OF PRESSURE VESSELS

VIII

Division 1

2005 Addenda
July 1, 2005

ASME BOILER AND PRESSURE VESSEL COMMITTEE SUBCOMMITTEE ON PRESSURE VESSELS

THE AMERICAN SOCIETY OF MECHANICAL ENGINEERS
NEW YORK, NEW YORK

B081W5

Date of Issuance: July 1, 2005

This international code or standard was developed under procedures accredited as meeting the criteria for American National Standards and it is an American National Standard. The Standards Committee that approved the code or standard was balanced to assure that individuals from competent and concerned interests have had an opportunity to participate. The proposed code or standard was made available for public review and comment that provides an opportunity for additional public input from industry, academia, regulatory agencies, and the public-at-large.

ASME does not "approve," "rate," or "endorse" any item, construction, proprietary device, or activity.

ASME does not take any position with respect to the validity of any patent rights asserted in connection with any items mentioned in this document, and does not undertake to insure anyone utilizing a standard against liability for infringement of any applicable letters patent, nor assume any such liability. Users of a code or standard are expressly advised that determination of the validity of any such patent rights, and the risk of infringement of such rights, is entirely their own responsibility.

Participation by federal agency representative(s) or person(s) affiliated with industry is not to be interpreted as government or industry endorsement of this code or standard.

ASME accepts responsibility for only those interpretations of this document issued in accordance with the established ASME procedures and policies, which precludes the issuance of interpretations by individuals.

The footnotes in this document are part of this American National Standard.

No part of this document may be reproduced in any form, in an electronic retrieval system or otherwise, without the prior written permission of the publisher.

Library of Congress Catalog Card Number: 56-3934
Printed in the United States of America

The American Society of Mechanical Engineers
Three Park Avenue, New York, NY 10016-5990

Copyright © 2005 by
THE AMERICAN SOCIETY OF MECHANICAL ENGINEERS
All rights reserved

SUMMARY OF CHANGES

Addenda to the 2004 Edition of the Code are issued in the form of replacement pages. Revisions, additions, or deletions are incorporated directly into the affected pages. It is advisable, however, that all replaced pages be retained for reference.

Replace or insert the pages listed. Changes given below are identified on the pages by a margin note, **A05**, placed next to the affected area. Revisions to the 2004 Edition are indicated by **04**. For the listing below, the *Page* references the affected area. A margin note, **A05**, placed next to the heading indicates *Location*. Revisions are listed under *Change*.

A detailed summary of each change contained in this Addenda is available for review and download on the ASME website at the following URL:

http://cstools.asme.org/summaryofchanges

Each entry in the listings below contains a file number (BC number), which can be used to locate the corresponding change within the detailed summary.

Page	*Location*	*Change (BC Number)*
ix, x, xxii, xxiv	Contents	Updated to reflect A05
xxxi–xl.1	Roster	Updated to reflect A05
2	U-1(c)(2)(h)	Reference to 9-1(c) added *(04-855)*
5	Table U-3	Fifteenth entry added *(03-771)*
7	UG-4(a)	First sentence revised *(03-864)*
8	UG-6	First paragraph redesignated (a) and second paragraph, (b), added *(99-353)*
11	Footnote 6	Revised *(03-830)*
12, 12.1	UG-14	First paragraph redesignated (a) and second paragraph, (b) added *(99-353)*
14	UG-20(c)	First sentence revised *(03-864)*
28	UG-32(a)	Second sentence added *(03-1092)*
	UG-32(c)	t_s added to nomenclature *(04-420)*
	UG-20(d)	Title and note revised *(04-420)*
	UG-20(e)	Title and note revised *(04-420)*
29, 29.1	UG-33(a)	Second sentence added *(03-1092)*
36	UG-35.1	Title and paragraph revised *(03-1092)*
43, 43.1	UG-37(g)	UW-15(d) redesignated as UG-37(g) *(03-1636)*
53, 53.1	UG-44(i)	(1) Reference for B16.47 added *(02-4135)* (2) Subparagraphs (i)(1) and (i)(2) revised *(02-4135)*
65	Fig. UG-84.1	Last sentence to General Note (b) added *(03-1651)*
66	Fig. UG-84.1M	Last sentence to General Note (b) added *(03-1651)*
75, 75.1	UG-101(a)(4)	Added *(03-1109)*
81	UG-116(a)(5)	Corrected by errata *(04-1608)*

Page	*Location*	*Change (BC Number)*
82, 82.1	UG-116(h)	(1) Subparagraph (h) renumbered as (h)(1) and revised *(03-152)* (2) Former subparagraphs (h)(1), (h)(2), and (h)(3) redesignated as (h)(1)(a), (h)(1)(b), and (h)(1)(c) respectively *(03-152)* (3) Subparagraphs (h)(2) and (h)(3) added *(03-152)*
87, 87.1	UG-125(a)	(1) First sentence redesignated as UG-125(a) *(03-1645)* (2) Second sentence redesignated as UG-125(a)(1) *(03-1645)* (3) Subparagraph UG-125(a)(2) added *(03-1645)* (4) Third sentence redesignated as UG-125(a)(3) *(03-1645)* (5) Final sentence redesignated as UG-125(a)(4) *(03-1645)*
	UG-125(d)	Revised *(03-1645)*
91, 92	UG-129(e)	Reference to items (10) and (11) added to final sentence *(04-458)*
97	UG-133(c)	Revised *(04-272)*
98	UG-135(a)	First and second sentences revised and third sentence added *(03-1645)*
99	UG-136(b)(3)	Revised *(02-2317)*
	UG-136(b)(4)	Revised in its entirety *(02-2317)*
101	UG-137(b)(2)	Revised *(02-2317)*
	UG-137(b)(3)	Revised in its entirety *(02-2317)*
111	UW-13(b)(5)	Added *02-1092)*
118	UW-15(d)	Redesignated as UG-37(g) *(03-1636)*
130–130.2	UW-20	Added *(04-489)*
159, 165	Table UCS-56	Corrected by errata *(04-1608)*
167, 171	UCS-56(f)(4)(a)	Corrected by errata *(04-1608)*
	UCS-66(a)	First two sentences revised *(02-2309)*
186	UNF-19(d)	Corrected by errata *(04-1608)*
188	Table UNF-23.2	Entries added to spec. no. SB-359 *(00-321)*
189	Table UNF-23.3	UNS nos. added to spec. nos. SB-163, SB-366, SB-407 – SB-409, SB-514, SB-515, and SB-564 *(03-419)*
198, 199	Table UHA-23	UNS nos. added to spec. nos. SA-182, SA-213, SA-240, SA-249, SA-312, and SA-479 *(04-114)*
202	Table UHA-32	Second column, first row revised *(02-2367)*
205	UHA-51(a)(4)	First sentence revised *(04-408)*
274, 274.1	UHX-9	Added *(00-638)*
	UHX-10(a)	First sentence revised in its entirety *(00-638)*
286	Fig. UHX-13.1	Sketch (a) revised *(04-1608)*
289	UHX-13.5.6	Final equation corrected by errata *(04-1608)*
293, 294	UHX-13.5.10	Second and fifth equation corrected by errata *(04-1608)*

Page	*Location*	*Change (BC Number)*
296	UHX-13.8.1(a)	Reference to UHX-13.5 corrected by errata *(04-1608)*
297	UHX-13.8.4(d)	Corrected by errata *(04-1608)*
	UHX-13.8.4(e)	Corrected by errata *(04-1608)*
	UHX-14.3	Corrected by errata *(04-1608)*
303	UHX-14.5.3	Equation corrected by errata *(04-1608)*
	UHX-14.5.5	Second equation corrected by errata *(04-1608)*
306–308	UHX-15	(1) New first paragraph added to UHX-15 (2) Previous UHX-15 redesignated as UW-20 *(04-489)*
309	UHX-20.1.1(c)(1)	Third nomenclature entry corrected by errata *(04-1608)*
310	UHX-20.1.1(c)(4)	Corrected by errata *(04-1608)*
325–328	UHX-20.4	Redesignated as L-10.1 *(04-489)*
	UHX-20.5	Redesignated as L-10.2 *(04-489)*
330	1-4	Second nomenclature entry added *(04-420)*
332–333	1-4(f)	(1) Title revised *(04-420)* (2) Title and paragraph revised for 1-4(f)(1) *(04-420)* (3) In 1-4(f)(1)(b), equation revised *(04-420)* (4) In 1-4(f)(1)(d), equation revised *(04-420)* (5) In 1-4(f)(1)(e), first sentence revised and final sentence added *(04-344)*(6) In 1-4(f)(1)(f), equation revised *(04-420)* (7) In 1-4(f)(1)(g), equation revised *(04-420)* (8) In 1-4(f)(2), title and first sentence revised *(04-420)*
335–336.1	1-6	(1) Title revised *(03-1092)* (2) Subparagraph (a) revised *(03-1092)* (3) Subparagraph (d)(1) revised *(03-1092)*
	Fig. 1-6	Title and sketch (a) revised *(03-1092)*
344, 344.1	2-1(a)	Second paragraph revised *(03-771)*
	2-1(b)	Penultimate sentence added *(03-771)*
346, 346.1	2-3	Definition for W_{m2} revised *(03-771)*
350, 350.1, 354	2-5(a)(3)	Added *(03-771)*
	Table 2-4	Added *(03-771)*
350	2-5(c)(2)	Second paragraph deleted *(03-771)*
355	2-6	Final sentence added to first paragraph *(03-771)*
364, 364.1	2-14	Added *(03-771)*
	2-15	Added *(03-771)*
	Table 2-14	Added *(03-771)*
376	5-1(d)	Corrected by errata *(04-1608)*
427	13-13(c)(2)	Introductory phrases for Diametral Plate corrected by errata *(04-148)*
428, 429	13-14(b)	Footnote 5 corrected by errata *(04-148)*
444	14-1(a)	Final sentence corrected by errata *(04-1608)*

Page	*Location*	*Change (BC Number)*
451, 452	Mandatory Appendix 16	Revised in its entirety *(03-615)*
455	17-4	Final sentence added *(03-1476)*
469	23-2(b)	Revised *(04-1557)*
479	26-2(d)	Reference corrected *(04-1558)*
480	Fig. 26-1	Sketches (a) and (b) corrected by errata *(04-1608)*
482, 483	26-4.2(b)	Fourth paragraph revised *(04-1558)*
	26-6.1	Second paragraph revised and corrected by errata *(04-1558)(04-148)*
	26-6.2(b)	Corrected by errata *(04-1558)*
484	26-6.4.2	Title and first equation corrected by errata *(04-148)*
	26-6.5.2(a)	Corrected by errata *(04-148)*
	26-6.5.2(b)	Sentence after text note deleted by errata *(04-148)*
488	26-6.6.3.1(b)	Revised *(04-1558)*
489, 490	26-7.2(c)	Second sentence revised *(04-1558)*
	26-7.5.1	Text note revised *(04-1558)*
491	26-8.5.1	Corrected by errata *(04-148)*
	26-8.5.2	Corrected by errata *(04-148)*
495	26-12(b)	Paragraph reference revised *(04-1558)*
	26-12(c)	Paragraph reference revised *(04-1558)*
498	26-14.2.1	Twentieth entry added by errata *(04-1608)*
503	Form 26-1	Final two lines revised *(04-1558)*
504	Form 26-1M	Final two lines revised *(04-1558)*
509	Fig. 28-1	Table added *(00-721)*
510	28-2(f)(4)	Revised in its entirety *(00-721)*
516	32-2(b)	Corrected by errata *(04-1608)*
	32-2(e)	Corrected by errata *(04-1608)*
517	Fig. 32-3	Sketch (b) revised *(03-1090)*
520	A-1(a)(1)	References updated *(04-489)*
	A-1(a)(2)	References updated in first and second paragraphs *(04-489)*
521	Table A-2	Note (4) revised *(04-489)*
580–580.3	L-10	Former UHX-20.4 and 20.5 redesignated as L-10 *(04-489)*
581	M-5.1	(1) Paragraphs (1) and (2) redesignated as (a) and (b) respectively *(04-1608)* (2) Paragraph (a) revised *(04-1608)*
583	M-5.4–M-5.8	Designators renumbered by errata *(04-1608)*
	M-5.7	References corrected by errata in first, seventh, and eighth paragraphs *(04-1608)*

Page	*Location*	*Change (BC Number)*
592	S-2	Deleted *(03-771)*
597	Form U-1A	Corrected by errata *(04-1608)*
599	Form U-2	New 20. added and remaining items renumbered *(03-152)*
600	Form U-2A	New 12. added and remaining items renumbered *(03-152)*
606	Table W-3	Numbers 68.–71. added *(03-152)*
625	Nonmandatory Appendix DD	(1) Items (1), (2)4. and (2)5. revised *(04-627)* (2) Items (2)9.–(2)12. added *(04-627)*
627	Fig. DD-1	Renumbered *(04-627)*
639.1–639.10	Appendix HH	Added *(02-2366)*

NOTE: Volume 55 of the Interpretations to Section VIII, Division 1 of the ASME Boiler and Pressure Vessel Code follows the last page of the Addenda.

Design

UW-8	General	106
UW-9	Design for Welded Joints	106
UW-10	Postweld Heat Treatment	107
UW-11	Radiographic and Ultrasonic Examination	107
UW-12	Joint Efficiencies	108
UW-13	Attachment Details	111
UW-14	Openings in or Adjacent to Welds	116
UW-15	Welded Connections	118
UW-16	Minimum Requirements for Attachment Welds at Openings	118
UW-17	Plug Welds	125
UW-18	Fillet Welds	128
UW-19	Welded Stayed Construction	128
UW-20.1	Tube-to-Tubesheet Welds	130.1 A05
UW-21	Flange to Nozzle Neck Welds	130.2

Fabrication

UW-26	General	130.2
UW-27	Welding Processes	130.2
UW-28	Qualification of Welding Procedure	131
UW-29	Tests for Welders and Welding Operators	131
UW-30	Lowest Permissible Temperatures for Welding	132
UW-31	Cutting, Fitting, and Alignment	132
UW-32	Cleaning of Surfaces to Be Welded	132
UW-33	Alignment Tolerance	132
UW-34	Spin-Holes	133
UW-35	Finished Longitudinal and Circumferential Joints	133
UW-36	Fillet Welds	134
UW-37	Miscellaneous Welding Requirements	134
UW-38	Repair of Weld Defects	135
UW-39	Peening	135
UW-40	Procedures for Postweld Heat Treatment	135
UW-41	Sectioning of Welded Joints	137
UW-42	Surface Weld Metal Buildup	137

Inspection and Tests

UW-46	General	137
UW-47	Check of Welding Procedure	137
UW-48	Check of Welder and Welding Operator Qualifications	137
UW-49	Check of Postweld Heat Treatment Practice	137
UW-50	Nondestructive Examination of Welds on Pneumatically Tested Vessels	137
UW-51	Radiographic and Radioscopic Examination of Welded Joints	138
UW-52	Spot Examination of Welded Joints	139
UW-53	Technique for Ultrasonic Examination of Welded Joints	140

Marking and Reports

UW-60	General	140

Pressure Relief Devices

UW-65	General	140

Figures

UW-3 Illustration of Welded Joint Locations Typical of Categories A, B, C, and D ... 106
UW-9 Butt Welding of Plates of Unequal Thickness ... 107
UW-13.1 Heads Attached to Shells ... 112
UW-13.2 Attachment of Pressure Parts to Flat Plates to Form a Corner Joint ... 115
UW-13.3 Typical Pressure Parts With Butt Welded Hubs ... 117
UW-13.4 Nozzle Necks Attached to Piping of Lesser Wall Thickness ... 117
UW-13.5 Fabricated Lap Joint Stub Ends for Lethal Service ... 118
UW-16.1 Some Acceptable Types of Welded Nozzles and Other Connections to Shells, Heads, etc ... 119
UW-16.2 Some Acceptable Types of Small Fittings ... 126
UW-19.1 Typical Forms of Welded Staybolts ... 129
UW-19.2 Use of Plug and Slot Welds for Staying Plates ... 129
A05 UW-20.1 Some Acceptable Types of Tube-to-Tubesheet Strength Welds ... 130.1
A05 UW-21 Welds of Socket Weld Flanges to Nozzle Necks ... 130.2

Tables

UW-12 Maximum Allowable Joint Efficiencies for Arc and Gas Welded Joints ... 109
UW-33 ... 133

Part UF Requirements for Pressure Vessels Fabricated by Forging ... 141

General

UF-1 Scope ... 141

Materials

UF-5 General ... 141
UF-6 Forgings ... 141
UF-7 Forged Steel Rolls Used for Corrugating Paper Machinery ... 141

Design

UF-12 General ... 141
UF-13 Head Design ... 142
UF-25 Corrosion Allowance ... 142

Fabrication

UF-26 General ... 142
UF-27 Tolerances on Body Forgings ... 142
UF-28 Methods of Forming Forged Heads ... 142
UF-29 Tolerance on Forged Heads ... 143
UF-30 Localized Thin Areas ... 143
UF-31 Heat Treatment ... 143
UF-32 Welding for Fabrication ... 143
UF-37 Repair of Defects in Material ... 144
UF-38 Repair of Weld Defects ... 145
UF-43 Attachment of Threaded Nozzles to Integrally Forged Necks and Thickened Heads on Vessels ... 145

Inspection and Tests

UF-45 General ... 145
UF-46 Acceptance by Inspector ... 145
UF-47 Parts Forging ... 145

Nondestructive Examination of Welded Joints

ULW-50 General ... 253
ULW-51 Inner Shells and Inner Heads ... 253
ULW-52 Layers — Welded Joints ... 253
ULW-53 Layers — Step Welded Girth Joints ... 256
ULW-54 Butt Joints ... 256
ULW-55 Flat Head and Tubesheet Weld Joints ... 256
ULW-56 Nozzle and Communicating Chambers Weld Joints ... 257
ULW-57 Random Spot Examination and Repairs of Weld ... 257

Fabrication

ULW-75 General ... 259
ULW-76 Vent Holes ... 259
ULW-77 Contact Between Layers ... 259
ULW-78 Alternative to Measuring Contact Between Layers During Construction ... 260

Inspection and Testing

ULW-90 General ... 261

Marking and Reports

ULW-115 General ... 261

Pressure Relief Devices

ULW-125 General ... 261

Figures

ULW-2.1 Some Acceptable Layered Shell Types ... 239
ULW-2.2 Some Acceptable Layered Head Types ... 240
ULW-17.1 Transitions of Layered Shell Sections ... 242
ULW-17.2 Some Acceptable Solid Head Attachments To Layered Shell Sections ... 243
ULW-17.3 Some Acceptable Flat Heads and Tubesheets With Hubs Joining Layered Shell Sections ... 245
ULW-17.4 Some Acceptable Flanges for Layered Shells ... 246
ULW-17.5 Some Acceptable Layered Head Attachments to Layered Shells ... 247
ULW-17.6 Some Acceptable Welded Joints of Layered-to-Layered and Layered-to-Solid Sections ... 248
ULW-18.1 Some Acceptable Nozzle Attachments in Layered Shell Sections ... 250
ULW-22 Some Acceptable Supports for Layered Vessels ... 252
ULW-32.1 Solid-to-Layered and Layered-to-Layered Test Plates ... 254
ULW-32.2 ... 255
ULW-32.3 ... 255
ULW-32.4 ... 255
ULW-54.1 ... 257
ULW-54.2 ... 258
ULW-77 ... 260

Part ULT Alternative Rules for Pressure Vessels Constructed of Materials Having Higher Allowable Stresses at Low Temperature ... 262

General

ULT-1 Scope ... 262
ULT-2 Conditions of Service ... 262

ULT-5	General	262
Design		
ULT-16	General	263
ULT-17	Welded Joints	263
ULT-18	Nozzles and Other Connections	263
ULT-23	Maximum Allowable Stress Values	263
ULT-27	Thickness of Shells	263
ULT-28	Thickness of Shells Under External Pressure	263
ULT-29	Stiffening Rings for Shells Under External Pressure	268
ULT-30	Structural Attachments	268
ULT-56	Postweld Heat Treatment	268
ULT-57	Examination	268
Fabrication		
ULT-75	General	268
ULT-79	Forming Shell Sections and Heads	268
ULT-82	Welding	268
ULT-86	Marking on Plate and Other Materials	272
Inspection and Tests		
ULT-90	General	272
ULT-99	Hydrostatic Test	272
ULT-100	Pneumatic Test	272
Marking and Reports		
ULT-115	General	272
Pressure Relief Devices		
ULT-125	General	273
Figure		
ULT-82	Weld Metal Delta Ferrite Content	271
Tables		
ULT-23	Maximum Allowable Stress Values in Tension for 5%, 8%, and 9% Nickel Steels, Type 304 Stainless Steel, and 5083-O Aluminum Alloy at Cryogenic Temperatures for Welded and Nonwelded Construction	264
ULT-82	Minimum Tensile Strength Requirements for Welding Procedure Qualification Tests on Tension Specimens Conforming to QW-462.1	269
Part UHX	**Rules for Shell-and-Tube Heat Exchangers**	274
UHX-1	Scope	274
UHX-2	Materials and Methods of Fabrication	274
UHX-3	Terminology	274
UHX-4	Design	274
A05 UHX-9	Tubesheet Flanged Extension	274
UHX-10	General Conditions of Applicability for Tubesheets	274.1
UHX-11	Tubesheet Characteristics	274.1
UHX-12	Rules for the Design of U-Tube Tubesheets	279
UHX-13	Rules for the Design of Fixed Tubesheets	285

UHX-14 Rules for the Design of Floating Tubesheets 297
UHX-15 Tube-to-Tubesheet Welds 306
UHX-16 Thin-Walled Expansion Joints 308
UHX-17 Thick-Walled Expansion Joints 308
UHX-18 Pressure Test Requirements 308
UHX-19 Heat Exchanger Marking 308
UHX-20 Examples 308

Figures

UHX-3 Terminology of Heat Exchanger Components 275
UHX-11.1 Tubesheet Geometry 276
UHX-11.2 Typical Untubed Lane Configurations 278
UHX-11.3 Curves for the Determination of E^*/E and ν^* (Equilateral Triangular Pattern) 280
UHX-11.4 Curves for the Determination of E^*/E and ν^* (Square Pattern) 281
UHX-12.1 U-Tube Tubesheet Configurations 282
UHX-13.1 Fixed Tubesheet Configurations 286
UHX-13.2 Z_d, Z_v, and Z_m Versus X_a 291
UHX-13.3-1 F_m Versus X_a ($0.0 \le Q_3 \le 0.8$) 292
UHX-13.3-2 F_m Versus X_a ($-0.8 \le Q_3 \le 0.0$) 293
UHX-13.4 Shell With Increased Thickness Adjacent to the Tubesheets 295
UHX-14.1 Floating Tubesheet Heat Exchangers 298
UHX-14.2 Stationary Tubesheet Configurations 299
UHX-14.3 Floating Tubesheet Configurations 300

Table

UHX-13.1 Formulas for Determination of Z_d, Z_v, and F_m 290

MANDATORY APPENDICES

Appendix 1 Supplementary Design Formulas 329
Appendix 2 Rules for Bolted Flange Connections With Ring Type Gaskets 344
Appendix 3 Definitions 365
Appendix 4 Rounded Indications Charts Acceptance Standard for Radiographically Determined Rounded Indications in Welds 368
Appendix 5 Flanged and Flued or Flanged Only Expansion Joints 376
Appendix 6 Methods for Magnetic Particle Examination (MT) 380
Appendix 7 Examination of Steel Castings 382
Appendix 8 Methods for Liquid Penetrant Examination (PT) 385
Appendix 9 Jacketed Vessels 387
Appendix 10 Quality Control System 396
Appendix 11 Capacity Conversions for Safety Valves 399
Appendix 12 Ultrasonic Examination of Welds (UT) 403
Appendix 13 Vessels of Noncircular Cross Section 404
Appendix 14 Integral Flat Heads With a Large, Single, Circular, Centrally Located Opening 444
Appendix 16 Submittal of Technical Inquiries to the Boiler and Pressure Vessel Committee 451
Appendix 17 Dimpled or Embossed Assemblies 453
Appendix 18 Adhesive Attachment of Nameplates 463
Appendix 19 Electrically Heated or Gas Fired Jacketed Steam Kettles 464
Appendix 20 Hubs Machined From Plate 465
Appendix 21 Jacketed Vessels Constructed of Work-Hardened Nickel 466

Appendix 22	Integrally Forged Vessels	467
Appendix 23	External Pressure Design of Copper, Copper Alloy, and Titanium Alloy Condenser and Heat Exchanger Tubes With Integral Fins	469
Appendix 24	Design Rules for Clamp Connections	471
Appendix 25	Acceptance of Testing Laboratories and Authorized Observers for Capacity Certification of Pressure Relief Valves	477
Appendix 26	Pressure Vessel and Heat Exchanger Expansion Joints	479
Appendix 27	Alternative Requirements for Glass-Lined Vessels	505
Appendix 28	Alternative Corner Weld Joint Detail for Box Headers for Air-Cooled Heat Exchangers	508
Appendix 30	Rules for Drilled Holes Not Penetrating Through Vessel Wall	511
Appendix 31	Rules for Cr-Mo Steels With Additional Requirements for Welding and Heat Treatment	513
Appendix 32	Local Thin Areas in Cylindrical Shells and in Spherical Segments of Shells	516
Appendix 33	Standards Units for Use in Equations	519

NONMANDATORY APPENDICES

Appendix A	Basis for Establishing Allowable Loads for Tube-to-Tubesheet Joints	520
Appendix C	Suggested Methods for Obtaining the Operating Temperature of Vessel Walls in Service	526
Appendix D	Suggested Good Practice Regarding Internal Structures	527
Appendix E	Suggested Good Practice Regarding Corrosion Allowance	528
Appendix F	Suggested Good Practice Regarding Linings	529
Appendix G	Suggested Good Practice Regarding Piping Reactions and Design of Supports and Attachments	530
Appendix H	Guidance to Accommodate Loadings Produced by Deflagration	532
Appendix K	Sectioning of Welded Joints	534
Appendix L	Examples Illustrating the Application of Code Formulas and Rules	536
Appendix M	Installation and Operation	581
Appendix P	Basis for Establishing Allowable Stress Values	587
Appendix R	Preheating	588
Appendix S	Design Considerations for Bolted Flange Connections	590
Appendix T	Temperature Protection	593
Appendix W	Guide for Preparing Manufacturer's Data Reports	594
Appendix Y	Flat Face Flanges With Metal-to-Metal Contact Outside the Bolt Circle	612
Appendix DD	Guide to Information Appearing on Certificate of Authorization (See Fig. DD-1)	625
Appendix EE	Half-Pipe Jackets	628
Appendix FF	Guide for the Design and Operation of Quick-Actuating (Quick-Opening) Closures	633
Appendix GG	Guidance for the Use of U.S. Customary and SI Units in the ASME Boiler and Pressure Vessel Code	636
A05 Appendix HH	Tube Expanding Procedures and Qualification	639.1

Index 640

PERSONNEL

ASME Boiler and Pressure Vessel Committee
Subcommittees, Subgroups, and Working Groups

As of January 1, 2005

MAIN COMMITTEE

G. G. Karcher, *Chair*
J. G. Feldstein, *Vice Chair*
J. S. Brzuszkiewicz, *Secretary*
R. W. Barnes
J. E. Batey
D. L. Berger
M. N. Bressler
D. A. Canonico
F. C. Cherny
D. A. Douin
R. E. Gimple
M. Gold
T. E. Hansen
C. L. Hoffmann
D. F. Landers
W. M. Lundy
J. R. MacKay
U. R. Miller
R. A. Moen
P. A. Molvie
C. C. Neely
G. C. Park
T. P. Pastor
M. D. Rana
B. W. Roberts
F. J. Schaaf, Jr.
A. Selz
R. W. Swayne
D. E. Tanner
S. V. Voorhees

EXECUTIVE COMMITTEE (MAIN COMMITTEE)

J. G. Feldstein, *Chair*
G. G. Karcher, *Vice Chair*
J. S. Brzuszkiewicz, *Secretary*
R. W. Barnes
D. L. Berger
D. A. Canonico
R. E. Gimple
M. Gold
M. Kotb
T. P. Pastor
A. Selz
D. E. Tanner

HONORARY MEMBERS (MAIN COMMITTEE)

F. P. Barton
R. D. Bonner
R. J. Bosnak
R. J. Cepluch
L. J. Chockie
T. M. Cullen
W. D. Doty
J. R. Farr
G. E. Feigel
R. C. Griffin
O. F. Hedden
E. J. Hemzy
M. H. Jawad
A. J. Justin
W. G. Knecht
J. LeCoff
T. G. McCarty
G. C. Millman
F. N. Moschini
R. F. Reedy
W. E. Somers
K. K. Tam
L. P. Zick, Jr.

HONORS AND AWARDS COMMITTEE

J. R. MacKay, *Chair*
J. N. Shih, *Secretary*
J. E. Batey
D. L. Berger
J. G. Feldstein
M. Gold
F. E. Gregor
W. L. Haag, Jr.
S. F. Harrison
R. M. Jessee
T. P. Pastor
R. R. Stevenson

MARINE CONFERENCE GROUP

J. Tiratto, *Chair*
L. W. Douthwaite

CONFERENCE COMMITTEE

D. A. Douin — Illinois *(Chair)*
R. D. Reetz — North Dakota *(Vice Chair)*
D. E. Tanner — Ohio *(Secretary)*
R. J. Aben, Jr. — Michigan
J. S. Aclaro — California
J. T. Amato — Minnesota
E. A. Anderson — Chicago, Illinois
F. R. Andrus — Oregon
R. D. Austin — Colorado
M. M. Barber — Michigan
R. W. Bartlett — Arizona
F. P. Barton — Virginia
W. K. Brigham — New Hampshire
D. E. Burns — Nebraska
J. H. Burpee — Maine
C. J. Castle — Nova Scotia, Canada
R. R. Cate — Louisiana
P. A. Conklin — New York
D. C. Cook — California
R. A. Coomes — Kentucky
D. Eastman — Newfoundland and Labrador, Canada
G. L. Ebeyer — New Orleans, Louisiana
E. Everett — Georgia
J. M. Given, Jr. — North Carolina
P. C. Hackford — Utah
J. B. Harlan — Delaware
M. L. Holloway — Oklahoma
K. Hynes — Prince Edward Island, Canada
D. T. Jagger — Ohio
D. J. Jenkins — Kansas
S. Katz — British Columbia, Canada
M. Kotb — Quebec, Canada
K. T. Lau — Alberta, Canada
S. E. Lyons — Arkansas
M. A. Malek — Florida
G. F. Mankel — Alaska
R. D. Marvin II — Washington
I. W. Mault — Manitoba, Canada
H. T. McEwen — Mississippi
R. Mile — Ontario, Canada
M. F. Mooney — Massachusetts
Y. Nagpaul — Hawaii
T. M. Parks — Texas
J. D. Payton — Pennsylvania
M. R. Peterson — Alaska
H. D. Pfaff — South Dakota
D. C. Price — Yukon Territory, Canada
R. S. Pucek — Wisconsin
D. E. Ross — New Brunswick, Canada
N. Surtees — Saskatchewan, Canada
M. R. Toth — Tennessee
M. J. Verhagen — Wisconsin
M. Washington — New Jersey
R. B. West — Iowa
M. J. Wheel — Vermont
D. J. Willis — Indiana

BPV PROJECT TEAM ON HYDROGEN TANKS

M. D. Rana, *Chair*
G. M. Eisenberg, *Secretary*
W. L. Birch
F. L. Brown
D. A. Canonico
D. C. Cook
R. B. Deremer
T. Joseph
N. L. Newhouse
R. E. Nickell
G. B. Rawls, Jr.
J. R. Sims, Jr.
N. Sirosh
S. Staniszewski
D. W. Treadwell
E. Upitis
C. T. L. Webster
H. Barthelemy, *Corresponding Member*
R. C. Biel, *Corresponding Member*
J. Cameron, *Corresponding Member*
M. Duncan, *Corresponding Member*
D. R. Frikken, *Corresponding Member*
C. H. Rivkin, *Corresponding Member*
T. Schilling, *Corresponding Member*
J. H. Smith, *Corresponding Member*

INTERNATIONAL INTEREST REVIEW GROUP

V. Felix
S. H. Leong
P. Williamson

SUBCOMMITTEE ON POWER BOILERS (SC I)

D. L. Berger, *Chair*
B. W. Roberts, *Vice Chair*
J. N. Shih, *Secretary*
D. A. Canonico
K. K. Coleman
P. D. Edwards
J. G. Feldstein
J. Hainsworth
T. E. Hansen
J. S. Hunter
C. F. Jeerings
J. P. Libbrecht
W. L. Lowry
J. R. MacKay
T. C. McGough
R. E. McLaughlin
P. A. Molvie
J. T. Pillow
R. D. Schueler, Jr.
J. P. Swezy
J. M. Tanzosh
R. V. Wielgoszinski
D. J. Willis

Honorary Members (SC I)

D. N. French
W. E. Somers
R. L. Williams

Subgroup on Design (SC I)

P. A. Molvie, *Chair*
M. L. Coats
J. D. Fishburn
J. P. Glaspie
C. F. Jeerings
J. P. Libbrecht
J. C. Light
R. D. Schueler, Jr.
J. L. Seigle
N. Surtees
J. P. Swezy
S. V. Torkildson
R. V. Wielgoszinski

Subgroup on Fabrication and Examination (SC I)

J. T. Pillow, *Chair*
J. P. Swezy, *Secretary*
D. L. Berger
J. Hainsworth
T. E. Hansen
T. C. McGough
R. E. McLaughlin
Y. Oishi
R. D. Schueler, Jr.
R. V. Wielgoszinski

Subgroup on General Requirements (SC I)

R. E. McLaughlin, *Chair*
J. Hainsworth, *Secretary*
P. D. Edwards
T. E. Hansen
C. F. Jeerings
W. L. Lowry
F. Massi
T. C. McGough
J. T. Pillow
R. P. Sullivan
S. V. Torkildson
R. V. Wielgoszinski
D. J. Willis

Subgroup on Materials (SC I)

B. W. Roberts, *Chair*
J. S. Hunter, *Secretary*
D. A. Canonico
K. K. Coleman
K. L. Hayes
J. F. Henry
J. P. Libbrecht
J. R. MacKay
F. Masuyama
J. M. Tanzosh

Subgroup on Piping (SC I)

T. E. Hansen, *Chair*
D. L. Berger
P. D. Edwards
W. L. Lowry
F. Massi
T. C. McGough
E. A. Whittle

Heat Recovery Steam Generators Task Group (SC I & SC VIII)

T. E. Hansen, *Chair*
E. M. Ortman, *Secretary*
R. W. Anderson
J. P. Bell
I. J. Cotton
L. R. Douglas
J. D. Fishburn
J. P. Libbrecht
D. L. Marriott
B. W. Moore
A. L. Plumley
D. W. Rahoi
R. D. Scheuler, Jr.
R. H. Sirois
J. C. Steverman, Jr.
J. K. Tercey
S. R. Timko
S. V. Torkildson
B. C. Turczynski
E. A. Turhan

SUBCOMMITTEE ON MATERIALS (SC II)

M. Gold, *Chair*
R. A. Moen, *Vice Chair*
N. Lobo, *Secretary*
F. Abe
D. C. Agarwal
W. R. Apblett, Jr.
M. N. Bressler
H. D. Bushfield
J. Cameron
D. A. Canonico
D. W. Gandy
M. H. Gilkey
J. F. Grubb
J. F. Henry
C. L. Hoffmann
F. Masuyama
R. K. Nanstad
M. L. Nayyar
E. G. Nisbett
D. W. Rahoi
B. W. Roberts
E. Shapiro
R. C. Sutherlin
R. W. Swindeman
J. M. Tanzosh
B. E. Thurgood
J. C. Vaillant

Honorary Members (SC II)

A. P. Ahrendt
T. M. Cullen
R. Dirscherl
W. D. Doty
W. D. Edsall
J. J. Heger
G. C. Hsu
C. E. Spaeder, Jr.
A. W. Zeuthen

Subgroup on External Pressure (SC II & SC-D)

R. W. Mikitka, *Chair*
J. A. Morrow, *Secretary*
S. R. Frost
D. S. Griffin
J. F. Grubb
M. Katcher
E. Michalopoulos
D. Nadel
D. F. Shaw
C. H. Sturgeon

Subgroup on Ferrous Specifications (SC II)

E. G. Nisbett, *Chair*
A. Appleton
R. M. Davison
B. M. Dingman
M. J. Dosdourian
T. Graham
J. F. Grubb
K. M. Hottle
D. Janikowski
D. C. Krouse
L. J. Lavezzi
W. C. Mack
J. K. Mahaney
A. S. Melilli
K. E. Orie
E. Upitis
R. Zawierucha
A. W. Zeuthen

Subgroup on International Material Specifications (SC II)

W. M. Lundy, *Chair*
J. P. Glaspie, *Secretary*
D. C. Agarwal
H. D. Bushfield
D. A. Canonico
A. Chaudouet
W. D. Doty
A. F. Garbolevsky
D. O. Henry
M. Higuchi
H. Lorenz
R. D. Schueler, Jr.
E. A. Steen
E. Upitis

Subgroup on Nonferrous Alloys (SC II)

D. W. Rahoi, *Chair*
M. Katcher, *Secretary*
D. C. Agarwal
W. R. Apblett, Jr.
H. D. Bushfield
L. G. Coffee
M. H. Gilkey
J. F. Grubb
E. L. Hibner
G. C. Hsu
A. G. Kireta, Jr.
J. Kissell
O. Miyahara
D. T. Peters
E. Shapiro
R. C. Sutherlin
R. Zawierucha

Subgroup on Strength, Ferrous Alloys (SC II)

C. L. Hoffmann, *Chair*
J. M. Tanzosh, *Secretary*
F. Abe
W. R. Apblett, Jr.
D. A. Canonico
K. K. Coleman
M. Gold
E. L. Hibner
F. Masuyama
O. Miyahara
R. A. Moen
H. Murakami
D. W. Rahoi
B. W. Roberts
M. S. Shelton
R. W. Swindeman
B. E. Thurgood
T. P. Vassallo, Jr.

Subgroup on Strength of Weldments (SC II & SC IX)

J. M. Tanzosh, *Chair*
K. K. Coleman
W. D. Doty
R. D. Flenner
K. L. Hayes
J. F. Henry
W. F. Newell, Jr.
D. W. Rahoi
B. W. Roberts
W. J. Sperko
B. E. Thurgood

Subgroup on Toughness (SC II & SC VIII)

W. S. Jacobs, *Chair*
J. L. Arnold
R. J. Basile
J. Cameron
W. D. Doty
H. E. Gordon
C. D. Lamb
K. Mokhtarian
C. C. Neely
T. T. Phillips
M. D. Rana
D. A. Swanson
E. Upitis

Special Working Group on Nonmetallic Materials (SC II)

C. W. Rowley, *Chair*
F. L. Brown
P. S. Hill
M. R. Kessler
F. R. Volgstadt
R. H. Walker
F. Worth

SUBCOMMITTEE ON NUCLEAR POWER (SC III)

R. W. Barnes, *Chair*
R. M. Jessee, *Vice Chair*
C. A. Sanna, *Secretary*
Y. Asada
W. H. Borter
M. N. Bressler
F. C. Cherny
J. R. Cole
R. E. Cornman, Jr.
R. P. Deubler
W. D. Doty
B. A. Erler
G. M. Foster
D. H. Hanrath
R. S. Hill III
C. L. Hoffmann
C. C. Kim
V. Kostarev
D. F. Landers
W. C. LaRochelle
K. A. Manoly
E. A. Mayhew
W. N. McLean
R. A. Moen
R. F. Reedy
B. B. Scott
J. D. Stevenson
C. H. Walters
K. R. Wichman

Honorary Members (SC III)

E. B. Branch
F. R. Drahos
C. J. Pieper

Subgroup on Containment Systems for Spent Fuel and High-Level Waste Transport Packagings (SC III)

G. M. Foster, *Chair*
G. J. Solovey, *Vice Chair*
D. K. Morton, *Secretary*
W. H. Borter
G. R. Cannell
J. T. Conner
E. L. Farrow
R. S. Hill III
H. W. Lee
P. E. McConnell
I. D. McInnes
A. B. Meichler
R. E. Nickell
T. J. O'Connell
E. L. Pleins
H. P. Shrivastava
N. M. Simpson
R. H. Smith
J. D. Stevenson
C. J. Temus
P. Turula
A. D. Watkins

Subgroup on Design (SC III)

R. P. Deubler, *Chair*
C. W. Bruny, *Vice Chair*
A. N. Nguyen, *Secretary*
T. M. Adams
E. B. Branch
M. N. Bressler
D. L. Caldwell
J. R. Cole
R. E. Cornman, Jr.
A. A. Dermenjian
K. Hada
D. H. Hanrath
R. S. Hill III
R. I. Jetter
H. Kobayashi
J. T. Land
D. F. Landers
K. A. Manoly
R. J. Masterson
W. N. McLean
J. C. Minichiello
F. F. Naguib
T. Nakamura
W. Z. Novak
I. Saito
G. C. Slagis
J. D. Stevenson
J. P. Tucker
K. R. Wichman

Working Group on Supports (SG-D) (SC III)

R. J. Masterson, *Chair*
F. J. Birch, *Secretary*
U. S. Bandyopadhyay
R. P. Deubler
J. C. Finneran, Jr.
A. N. Nguyen
I. Saito
J. R. Stinson
D. V. Walshe
C.-I. Wu

Working Group on Core Support Structures (SG-D) (SC III)

J. F. Kielb
J. T. Land

Working Group on Dynamic and Extreme Load Conditions (SG-D) (SC III)

M. K. Au-Yang
R. D. Blevins
P.-Y. Chen
W. S. LaPay
H. Lockert
P. R. Olson

Working Group on Piping (SG-D) (SC III)

J. R. Cole, *Chair*
P. Hirschberg, *Secretary*
T. M. Adams
G. A. Antaki
C. Basavaraju
J. Catalano
C. Y. Chern
R. J. Gurdal
R. W. Haupt
R. S. Hill III
D. F. Landers
V. C. Matzen
J. F. McCabe
J. C. Minichiello
F. F. Naguib
A. N. Nguyen
O. O. Oyamada
R. D. Patel
E. C. Rodabaugh
M. S. Sills
G. C. Slagis
V. K. Verma
E. A. Wais
C.-I. Wu

Working Group on Probabilistic Methods in Design (SG-D) (SC III)

R. S. Hill III, *Chair*
T. Asayama
B. M. Ayyub
T. A. Bacon
K. R. Balkey
A. A. Dermenjian
M. R. Graybeal
D. O. Henry
E. V. Imbro
S. D. Kulat
A. McNeill III
P. J. O'Regan
I. Saito
M. E. Schmidt
J. P. Tucker
R. M. Wilson

Working Group on Pumps (SG-D) (SC III)

R. E. Cornman, Jr., *Chair*
M. Higuchi
G. R. Jones
J. W. Leavitt
J. E. Livingston
J. R. Rajan
G. K. Vaghasia
A. G. Washburn

Working Group on Valves (SG-D) (SC III)

W. N. McLean, *Chair*
R. R. Brodin
J. D. Page
S. N. Shields
H. R. Sonderegger
J. C. Tsacoyeanes
J. P. Tucker
R. G. Visalli

Working Group on Vessels (SG-D) (SC III)

F. F. Naguib, *Chair*
G. K. Miller, *Secretary*
C. W. Bruny
G. D. Cooper
D. H. Hanrath
M. Hartzman
W. J. Heilker
A. Kalnins
R. B. Keating
D. E. Matthews
M. Nakahira
R. M. Wilson

Special Working Group on Environmental Effects (SG-D) (SC III)

W. Z. Novak, *Chair*
Y. Asada
R. S. Hill III
C. L. Hoffmann
R. A. Moen
S. Yukawa

Subgroup on General Requirements (SC III & SC 3C)

W. C. LaRochelle, *Chair*
C. A. Lizotte, *Secretary*
A. Appleton
B. H. Berg
E. A. Mayhew
R. P. McIntyre
M. R. Minick
B. B. Scott
H. K. Sharma
D. M. Vickery
D. V. Walshe
C. H. Walters

Subgroup on Materials, Fabrication, and Examination (SC III)

C. L. Hoffmann, *Chair*
G. P. Milley, *Secretary*
B. H. Berg
W. H. Borter
D. M. Doyle
G. M. Foster
G. B. Georgiev
R. M. Jessee
C. C. Kim
M. Lau
R. A. Moen
H. Murakami
M. Nakahira
C. J. Pieper
N. M. Simpson
W. J. Sperko
J. R. Stinson
K. B. Stuckey
S. Yukawa

Subgroup on Pressure Relief (SC III)

S. F. Harrison, Jr., *Chair*
F. C. Cherny
E. M. Petrosky
A. L. Szeglin
D. G. Thibault

Special Working Group on Editing and Review (SC III)

R. F. Reedy, *Chair*
W. H. Borter
M. N. Bressler
D. L. Caldwell
R. P. Deubler
B. A. Erler
D. H. Hanrath
W. C. LaRochelle
J. D. Stevenson

Project Team on Graphite Core Components (SC III)

T. D. Burchell, *Chair*
C. A. Sanna, *Secretary*
R. L. Bratton
M. W. Davies
O. Gelineau
M. P. Labar
L. C. Lanzel
S. M. Mazurkiewicz
M. N. Mitchell

JOINT ACI-ASME COMMITTEE ON CONCRETE COMPONENTS FOR NUCLEAR SERVICE (SC 3C)

M. F. Hessheimer, *Chair*
T. C. Inman, *Vice Chair*
C. A. Sanna, *Secretary*
J. F. Artuso
A. C. Eberhardt
M. Elgohary
B. A. Erler
J. Gutierrez
D. C. Jeng
T. E. Johnson
N.-H. Lee
B. B. Scott
R. E. Shewmaker
J. D. Stevenson
T. Watson
A. Y. C. Wong

SUBCOMMITTEE ON HEATING BOILERS (SC IV)

P. A. Molvie, *Chair*
S. V. Voorhees, *Vice Chair*
G. Moino, *Secretary*
R. W. Bartlett
T. L. Bedeaux
D. C. Bixby
J. Calland
C. M. Dove
B. G. French
W. L. Haag, Jr.
J. D. Hoh
D. J. Jenkins
K. M. McTague
K. R. Moskwa
E. A. Nordstrom
J. L. Seigle
R. V. Wielgoszinski
F. P. Barton, *Honorary Member*
R. B. Duggan, *Honorary Member*
R. H. Weigel, *Honorary Member*
J. I. Woodward, *Honorary Member*

Subgroup on Care and Operation of Heating Boilers (SC IV)

S. V. Voorhees, *Chair*
T. L. Bedeaux
K. J. Hoey
J. D. Hoh
K. M. McTague
P. A. Molvie

Subgroup on Cast Iron Boilers (SC IV)

K. M. McTague, *Chair*
T. L. Bedeaux
J. P. Chicoine
P. A. Larkin
C. P. McQuiggan
K. R. Moskwa

Subgroup on Water Heaters (SC IV)

W. L. Haag, Jr., *Chair*
J. Calland
T. D. Gantt
F. M. Lucas
K. M. McTague
E. Robinson
F. J. Schreiner
M. A. Taylor
T. E. Trant

Subgroup on Welded Boilers (SC IV)

J. L. Seigle, *Chair*
R. W. Bartlett
T. L. Bedeaux
J. Calland
C. M. Dove
B. G. French
E. A. Nordstrom
R. P. Sullivan
R. V. Wielgoszinski

SUBCOMMITTEE ON NONDESTRUCTIVE EXAMINATION (SC V)

J. E. Batey, *Chair*
F. B. Kovacs, *Vice Chair*
U. D'Urso, *Secretary*
S. J. Akrin
A. S. Birks
P. L. Brown
N. Y. Faransso
G. W. Hembree
R. W. Kruzic
J. F. Manning
W. C. McGaughey
R. D. McGuire
D. R. Quattlebaum, Jr.
F. J. Sattler
M. J. Wheel

Subgroup on General Requirements/ Personnel Qualifications and Inquiries (SC V)

R. D. McGuire, *Chair*
J. E. Batey
A. S. Birks
N. Y. Faransso
G. W. Hembree
J. W. Houf
J. R. MacKay
J. P. Swezy

Subgroup on Surface Examination Methods (SC V)

S. J. Akrin
A. S. Birks
N. Y. Faransso
G. W. Hembree
R. W. Kruzic
D. R. Quattlebaum, Jr.
F. J. Sattler
E. F. Summers, Jr.
M. J. Wheel
P. L. Brown, *Alternate*

Subgroup on Volumetric Methods (SC V)

G. W. Hembree, *Chair*
S. J. Akrin
J. E. Batey
N. Y. Faransso
A. F. Garbolevsky
R. Kellerhall
F. B. Kovacs
R. W. Kruzic
J. F. Manning
W. C. McGaughey
F. J. Sattler
E. F. Summers, Jr.
J. P. Swezy
P. L. Brown, *Alternate*

Working Group on Acoustic Emissions (SG-VM) (SC V)

J. E. Aycock
J. E. Batey
N. Y. Faransso
J. F. Manning

Working Group on Radiography (SG-VM) (SC V)

G. W. Hembree, *Chair*
F. B. Kovacs, *Chair*
S. J. Akrin
J. E. Aycock
J. E. Batey
N. Y. Faransso
A. F. Garbolevsky
R. W. Kruzic
T. Plasek
E. F. Summers, Jr.
J. P. Swezy
P. L. Brown, *Alternate*

Working Group on Ultrasonics (SG-VM) (SC V)

R. W. Kruzic, *Chair*
J. E. Aycock
N. Y. Faransso
O. F. Hedden
R. Kellerhall
J. F. Manning
W. C. McGaughey
F. J. Sattler

SUBCOMMITTEE ON PRESSURE VESSELS (SC VIII)

T. P. Pastor, *Chair*
K. Mokhtarian, *Vice Chair*
S. J. Rossi, *Secretary*
R. J. Basile
V. Bogosian
J. Cameron
R. M. Elliott
J. G. Feldstein
J. P. Glaspie
M. J. Houle
W. S. Jacobs
G. G. Karcher
K. T. Lau
R. Mahadeen
R. W. Mikitka
U. R. Miller
C. C. Neely
D. T. Peters
M. J. Pischke
M. D. Rana
S. C. Roberts
C. D. Rodery
K. J. Schneider
A. Selz
J. R. Sims, Jr.
E. A. Steen
K. K. Tam
E. L. Thomas, Jr.
E. Upitis

Subgroup on Design (SC VIII)

U. R. Miller, *Chair*
R. E. Knoblock, *Secretary*
O. A. Barsky
R. J. Basile
M. R. Breach
S. M. Caldwell
J. R. Farr
J. P. Glaspie
W. S. Jacobs
M. D. Lower
R. W. Mikitka
K. Mokhtarian
T. P. Pastor
M. D. Rana
G. B. Rawls, Jr.
S. C. Roberts
C. D. Rodery
A. Selz
S. C. Shah
J. C. Sowinski
C. H. Sturgeon
D. A. Swanson
K. K. Tam
E. L. Thomas, Jr.
R. A. Whipple

Subgroup on Fabrication and Inspection (SC VIII)

C. D. Rodery, *Chair*
E. A. Steen, *Vice Chair*
J. L. Arnold
W. J. Bees
L. F. Campbell
H. E. Gordon
M. J. Houle
W. S. Jacobs
D. J. Kreft
C. D. Lamb
J. S. Lee
B. R. Morelock
M. J. Pischke
B. F. Shelley

Subgroup on General Requirements (SC VIII)

S. C. Roberts, *Chair*
D. B. Demichael, *Secretary*
R. J. Basile
V. Bogosian
R. M. Elliott
J. P. Glaspie
K. T. Lau
C. C. Neely
A. S. Olivares
F. L. Richter
K. J. Schneider
K. K. Tam

Subgroup on Materials (SC VIII)

J. Cameron, *Chair*
E. E. Morgenegg, *Secretary*
D. C. Agarwal
W. D. Doty
J. F. Grubb
E. L. Hibner
M. Katcher
W. M. Lundy
E. G. Nisbett
D. W. Rahoi
R. C. Sutherlin
E. Upitis

Special Working Group on Graphite Pressure Equipment (SC VIII)

S. Malone, *Chair*
U. D'Urso, *Secretary*
G. Braussen
F. L. Brown
S. W. Hairston
M. D. Johnson
M. R. Minick
T. A. Pindroh
E. Soltow
A. A. Stupica

Special Working Group on Heat Transfer Equipment (SC VIII)

R. Mahadeen, *Chair*
G. Aurioles, *Secretary*
O. A Barsky
S. M. Caldwell
J. I. Gordon
M. J. Holtz
F. E. Jehrio
S. Mayeux
U. R. Miller
T. W. Norton
F. Osweiller
R. J. Stastny
S. Yokell
R. P. Zoldak

Special Working Group on High-Pressure Vessels (SC VIII)

J. R. Sims, Jr., *Chair*
D. T. Peters, *Vice Chair*
P. A. Reddington, *Secretary*
L. P. Antalffy
R. C. Biel
D. J. Burns
P. N. Chaku
R. D. Dixon
M. E. Dupre
D. M. Fryer
J. L. Heck, Jr.
W. Hiller
A. H. Honza
M. M. James
P. Jansson
J. A. Kapp
J. Keltjens
D. P. Kendall
A. K. Khare
M. D. Mann
S. C. Mordre
G. J. Mraz
E. H. Perez
E. D. Roll
J. F. Sullivan
F. W. Tatar
S. Terada

Task Group on Impulsively Loaded Vessels (SC VIII)

R. B. Nickell, *Chair*
S. J. Rossi, *Secretary*
G. A. Antaki
D. D. Barker
R. C. Biel
D. W. Bowman
D. L. Caldwell
A. M. Clayton
J. E. Didlake, Jr.
T. A. Duffey
R. Forgan
B. L. Haroldsen
H. L. Heaton
E. A. Rodriguez
J. R. Sims, Jr.

SUBCOMMITTEE ON WELDING (SC IX)

J. G. Feldstein, *Chair*
W. J. Sperko, *Vice Chair*
J. D. Wendler, *Secretary*
D. A. Bowers
R. K. Brown, Jr.
M. L. Carpenter
L. P. Connor
W. D. Doty
P. D. Flenner
M. J. Houle
J. S. Lee
W. M. Lundy
I. W. Mault
R. D. McGuire
B. R. Newmark
A. S. Olivares
M. J. Pischke
S. D. Reynolds, Jr.
M. J. Rice
G. W. Spohn III
M. J. Stanko
P. L. Van Fosson
R. R. Young

Subgroup on Brazing (SC IX)

M. J. Pischke, *Chair*
F. Beckman
L. F. Campbell
M. L. Carpenter
M. J. Houle
C. F. Jeerings
J. P. Swezy

Subgroup on General Requirements (SC IX)

B. R. Newmark, *Chair*
P. R. Evans
R. M. Jessee
A. S. Olivares
H. B. Porter
R. A. Weiss
K. R. Willens

Subgroup on Materials (SC IX)

M. L. Carpenter, *Chair*
M. Bernasek
L. P. Connor
R. M. Jessee
C. C. Kim
S. D. Reynolds, Jr.
H. A. Sadler
C. E. Sainz
W. J. Sperko
M. J. Stanko
R. R. Young

Subgroup on Performance Qualification (SC IX)

D. A. Bowers, *Chair*
V. A. Bell
L. P. Connor
R. B. Corbit
P. R. Evans
P. D. Flenner
K. L. Hayes
M. J. Houle
J. S. Lee
W. M. Lundy
I. W. Mault
R. D. McGuire
M. B. Sims
G. W. Spohn III

Subgroup on Procedure Qualification (SC IX)

D. A. Bowers, *Chair*
M. J. Rice, *Secretary*
R. K. Brown, Jr.
A. S. Olivares
F. C. Ouyang
S. D. Reynolds, Jr.
M. B. Sims
W. J. Sperko
J. P. Swezy
P. L. Van Fosson
T. C. Wiesner

Honorary Member (SC IX)

W. K. Scattergood

SUBCOMMITTEE ON FIBER-REINFORCED PLASTIC PRESSURE VESSELS (SC X)

D. Eisberg, *Chair*
P. J. Conlisk, *Vice Chair*
J. N. Shih, *Secretary*
F. L. Brown
J. L. Bustillos
T. W. Cowley
T. J. Fowler
D. H. Hodgkinson
L. E. Hunt
B. M. Linnemann
J. C. Murphy
D. J. Painter
D. J. Pinell
G. Ramirez
J. R. Richter
B. F. Shelley
F. W. Van Name
D. O. Yancey, Jr.
P. H. Ziehl

SUBCOMMITTEE ON NUCLEAR INSERVICE INSPECTION (SC XI)

G. C. Park, *Chair*
R. W. Swayne, *Vice Chair*
S. E. Burke, *Secretary*
W. H. Bamford, Jr.
R. L. Beverly
R. C. Cipolla
D. D. Davis
R. L. Dyle
E. L. Farrow
R. E. Gimple
F. E. Gregor
K. Hasegawa
D. O. Henry
R. D. Kerr
S. D. Kulat
D. F. Landers
J. T. Lindberg
K. Miya
W. E. Norris
A. T. Roberts III
W. R. Rogers III
L. Sage
D. A. Scarth
F. J. Schaaf, Jr.
J. C. Spanner, Jr.
J. E. Staffiera
G. L. Stevens
E. W. Throckmorton III
D. E. Waskey
R. A. West
C. J. Wirtz
C. S. Withers
R. A. Yonekawa
K. K. Yoon
J. M. Agold, *Alternate*

Honorary Members (SC XI)

S. H. Bush
L. J. Chockie
C. D. Cowfer
O. F. Hedden
J. P. Houstrup
L. R. Katz
P. C. Riccardella

Subgroup on Evaluation Standards (SC XI)

W. H. Bamford, Jr., *Chair*
R. C. Cipolla
S. Coffin
G. H. De Boo
T. J. Griesbach
K. Hasegawa
D. N. Hopkins
Y. Imamura
K. Koyama
D. R. Lee
H. S. Mehta
J. G. Merkle
S. Ranganath
D. A. Scarth
G. L. Stevens
C. A. Tomes
K. R. Wichman
G. M. Wilkowski
K. K. Yoon

Working Group on Flaw Evaluation (SG-ES) (SC XI)

R. C. Cipolla, *Chair*
G. H. De Boo, *Secretary*
W. H. Bamford, Jr.
M. Basol
J. M. Bloom
E. Friedman
T. J. Griesbach
F. D. Hayes
P. H. Hoang
D. N. Hopkins
Y. Imamura
K. Koyama
D. R. Lee
H. S. Mehta
J. G. Merkle
M. A. Mitchell
K. Miyazaki
J. E. O'Sullivan
R. K. Qashu
S. Ranganath
D. A. Scarth
T. S. Schurman
W. L. Server
F. A. Simonen
K. R. Wichman
G. M. Wilkowski
K. K. Yoon
S. Yukawa
V. A. Zilberstein

Working Group on Operating Plant Criteria (SG-ES) (SC XI)

T. J. Griesbach, *Chair*
W. H. Bamford, Jr.
H. Behnke
B. A. Bishop
E. Friedman
S. R. Gosselin
P. J. Hijeck
S. N. Malik
P. Manbeck
H. S. Mehta
R. Pace
J. S. Panesar
D. W. Peltola
J. R. Pfefferle
S. Ranganath
S. T. Rosinski
W. L. Server
E. A. Siegel
F. A. Simonen
G. L. Stevens
K. K. Yoon
S. Yukawa
C. Santos, Jr., *Alternate*

Working Group on Pipe Flaw Evaluation (SG-ES) (SC XI)

D. A. Scarth, *Chair*
G. M. Wilkowski, *Secretary*
T. A. Bacon
W. H. Bamford, Jr.
R. C. Cipolla
N. G. Cofie
S. K. Daftuar
G. H. De Boo
E. Friedman
L. F. Goyette
K. Hasegawa
P. H. Hoang
D. N. Hopkins
K. K. Kashima
H. S. Mehta
K. Miyazaki
J. S. Panesar
K. K. Yoon
S. Yukawa
V. A. Zilberstein

Subgroup on Liquid-Metal–Cooled Systems (SC XI)

C. G. McCargar, *Chair*
W. L. Chase
R. W. King

Working Group on Liquid-Metal Reactor Covers (SG-LMCS) (SC XI)

W. L. Chase, *Chair*

Subgroup on Nondestructive Examination (SC XI)

J. C. Spanner, Jr., *Chair*
C. J. Wirtz, *Secretary*
F. L. Becker
N. R. Bentley
T. L. Chan
C. B. Cheezem
C. D. Cowfer
F. J. Dodd
D. O. Henry
M. R. Hum
G. L. Lagleder
J. T. Lindberg
G. A. Lofthus
A. S. Reed
F. J. Schaaf, Jr.
M. F. Sherwin

Working Group on Personnel Qualification and Surface, Visual, and Eddy Current Examination (SG-NDE) (SC XI)

J. J. McArdle III, *Chair*
M. F. Sherwin, *Chair*
D. R. Cordes, *Secretary*
B. L. Curtis
N. Farenbaugh
G. B. Georgiev
D. O. Henry
J. T. Lindberg
D. R. Quattlebaum, Jr.
A. S. Reed
J. C. Spanner, Jr.
C. J. Wirtz

Working Group on Pressure Testing (SG-WCS) (SC XI)

D. W. Lamond, *Chair*
J. M. Boughman, *Secretary*
T. M. Anselmi
J. J. Churchwell
S. Coffin
G. L. Fechter
K. W. Hall
R. E. Hall
J. K. McClanahan
A. McNeill III
B. L. Montgomery

Working Group on Procedure Qualification and Volumetric Examination (SG-NDE) (SC XI)

N. R. Bentley, *Chair*
B. Bevins, *Secretary*
G. R. Perkins, *Secretary*
F. L. Becker
C. B. Cheezem
C. D. Cowfer
S. R. Doctor
F. J. Dodd
M. E. Gothard
D. A. Jackson
R. Kellerhall
D. B. King
D. Kurek
G. L. Lagleder
G. A. Lofthus
C. E. Moyer, *Alternate*

Subgroup on Repair/Replacement Activities (SG-RRA)(SC XI)

R. W. Swayne, *Chair*
E. V. Farrell, Jr., *Secretary*
M. N. Bressler
S. B. Brown
R. E. Cantrell
P. D. Fisher
E. B. Gerlach
R. E. Gimple
R. A. Hermann
E. V. Imbro
R. D. Kerr
S. L. McCracken
B. R. Newton
J. E. O'Sullivan
W. R. Rogers III
R. R. Stevenson
D. E. Waskey
J. G. Weicks
C. S. Withers
R. A. Yonekawa

Working Group on Design and Programs (SG-RRA) (SC XI)

R. A. Yonekawa, *Chair*
S. B. Brown, *Secretary*
G. G. Elder
E. V. Farrell, Jr.
S. K. Fisher
E. B. Gerlach
D. R. Graham
W. R. Rogers III
S. P. Sekerak
R. R. Stevenson
R. W. Swayne
A. H. Taufique
T. P. Vassallo, Jr.

Working Group on Welding and Special Repair Process (SG-RRA) (SC XI)

D. E. Waskey, *Chair*
R. E. Cantrell, *Secretary*
J. A. Davis
S. J. Findlan
P. D. Fisher
A. J. Giannuzzi
R. P. Indap
R. D. Kerr
C. C. Kim
M. Lau
S. L. McCracken
B. R. Newton
J. E. O'Sullivan
J. G. Weicks
K. R. Willens
E. V. Andruskiewicz, *Alternate*

Subgroup on Water-Cooled Systems (SC XI)

E. W. Throckmorton III, *Chair*
G. E. Whitman, *Secretary*
J. M. Agold
G. L. Belew
J. M. Boughman
W. J. Briggs
R. E. Ciemiewicz
D. D. Davis
E. L. Farrow
O. F. Hedden
M. L. Herrera
S. D. Kulat
D. W. Lamond
W. E. Norris
D. Song
J. E. Staffiera
H. M. Stephens, Jr.
K. B. Thomas
R. A. West
H. L. Graves III, *Alternate*

Working Group on Containment (SG-WCS) (SC XI)

J. E. Staffiera, *Chair*
H. M. Stephens, Jr., *Secretary*
H. Ashar
W. J. Briggs
S. G. Brown
K. K. N. Chao
R. E. Ciemiewicz
R. C. Cox
M. J. Ferlisi
H. L. Graves III
H. T. Hill
R. D. Hough
C. N. Krishnaswamy
W. M. Lazear
D. Naus
S. C. Petitgout
W. E. Norris, *Alternate*

Working Group on ISI Optimization (SG-WCS) (SC XI)

E. A. Siegel, *Chair*
R. L. Turner, *Secretary*
W. H. Bamford, Jr.
N. R. Bentley
J. M. Boughman
R. E. Hall
D. G. Naujock
M. F. Sherwin
K. B. Thomas
G. E. Whitman

Working Group on Implementation of Risk-Based Examination (SG-WCS) (SC XI)

S. D. Kulat, *Chair*
J. M. Agold, *Secretary*
S. A. Ali
K. R. Balkey
B. A. Bishop
H. Q. Do
R. Fougerousse
M. R. Graybeal
K. W. Hall
M. L. Herrera
D. W. Lamond
J. T. Lindberg
I. Mach
R. K. Mattu
A. McNeill III
J. T. Mitman
P. J. O'Regan
M. J. Paterak
M. A. Pyne
F. A. Simonen
R. A. West
A. T. Keim, *Alternate*

Working Group on Inspection of Systems and Components (SG-WCS) (SC XI)

K. B. Thomas, *Chair*
D. Song, *Secretary*
V. L. Armentrout
G. L. Belew
H. Q. Do
R. Fougerousse
M. R. Hum
S. D. Kulat
J. T. Lindberg
I. Mach
D. G. Naujock
T. Nomura
C. M. Ross
R. L. Turner
R. A. West
G. E. Whitman

Working Group on General Requirements (SC XI)

A. T. Roberts III, *Chair*
K. Rhyne, *Secretary*
T. L. Chan
J. W. Crider
E. L. Farrow
E. J. Maloney
R. K. Mattu
L. Sage
S. R. Scott
C. S. Withers

Special Working Group on Editing and Review (SC XI)

R. W. Swayne, *Chair*
R. L. Beverly
L. Sage
J. E. Staffiera
C. J. Wirtz

Special Working Group on Plant Life Extension (SC XI)

F. E. Gregor, *Chair*
D. V. Burgess, *Secretary*
M. P. Lintz, *Secretary*
T. M. Anselmi
D. D. Davis
P.-T. Kuo
W. M. Lazear
T. A. Meyer

Project Team on High Temperature Gas-Cooled Reactors (SC XI)

J. Fletcher, *Chair*
C. A. Greene, *Secretary*
T. W. Brombach
N. Broom
W. A. O. Kriel
M. P. Labar
S. M. Mazurkiewicz
M. N. Mitchell
F. J. Schaaf, Jr.
R. W. Swayne

SUBCOMMITTEE ON TRANSPORT TANKS (SC XII)

A. Selz, *Chair*
P. D. Stumpf, *Secretary*
A. N. Antoniou
C. Becht IV
M. L. Coats
M. A. Garrett
C. H. Hochman
G. G. Karcher
G. McRae
M. R. Minick
M. D. Rana
C. M. Serratella
S. Staniszewski
G. R. Stoeckinger
M. R. Toth
A. P. Varghese
S. V. Voorhees
C. H. Walters

Subgroup on Design and Materials (SC XII)

M. D. Rana, *Chair*
D. A. Canonico
W. D. Doty
G. G. Karcher
M. Madheswaria
S. L. McWilliams
T. P. Pastor
M. D. Pham
J. L. Rademacher
T. A. Rogers
C. M. Serratella
A. P. Varghese
M. R. Ward
E. A. Whittle

Subgroup on Fabrication and Inspection (SC XII)

S. V. Voorhees, *Chair*
J. A. Byers
D. A. Canonico
M. L. Coats
J. J. Engelking
B. L. Gehl
L. D. Holsinger
D. J. Kreft
G. McRae
M. R. Minick

Subgroup on General Requirements (SC XII)

C. H. Hochman, *Chair*
T. W. Alexander
D. M. Allbritten
C. A. Betts
J. F. Cannon
J. L. Freiler
W. L. Garfield
M. A. Garrett
K. L. Gilmore
T. B. Lee
N. J. Paulick
G. R. Stoeckinger
M. R. Toth
C. H. Walters
L. Wolpert

SUBCOMMITTEE ON BOILER AND PRESSURE VESSEL ACCREDITATION (SC-BPVA)

W. C. LaRochelle, *Chair*
P. D. Edwards, *Vice Chair*
K. I. Baron, *Secretary*
M. B. Doherty
R. M. Elliott
P. C. Hackford
B. B. MacDonald
L. E. McDonald
K. M. McTague
M. L. Sisk
N. Surtees
D. E. Tanner
B. C. Turczynski
D. E. Tuttle
R. W. Bartlett, *Alternate*
V. Bogosian, *Alternate*
M. A. DeVries, *Alternate*
C. E. Ford, *Alternate*
T. E. Hansen, *Alternate*
L. J. Kuchera, *Alternate*
K. T. Lau, *Alternate*
G. P. Milley, *Alternate*
B. R. Morelock, *Alternate*
J. D. O'Leary, *Alternate*
H. R. Staehr, *Alternate*
J. A. West, *Alternate*
R. V. Wielgoszinski, *Alternate*
A. J. Spencer, *Honorary Member*

SUBCOMMITTEE ON NUCLEAR ACCREDITATION (SC-NA)

R. R. Stevenson, *Chair*
W. C. LaRochelle, *Vice Chair*
A. Bagner, *Secretary*
V. Bogosian
M. N. Bressler
G. Deily
S. M. Goodwin
K. A. Huber
M. Kotb
R. P. McIntyre
M. R. Minick
H. B. Prasse
T. E. Quaka
A. T. Roberts III
P. D. Edwards, *Alternate*
J. W. Highlands, *Alternate*
B. G. Kovarik, *Alternate*
C. Lizotte, *Alternate*
P. F. Prescott, *Alternate*
D. E. Tanner, *Alternate*
S. Toledo, *Alternate*
D. M. Vickery, *Alternate*
S. V. Voorhees, *Alternate*
C. H. Walters, *Alternate*
R. V. Wielgoszinski, *Alternate*
H. L. Wiger, *Alternate*
O. E. Trapp, *Staff Representative*

SUBCOMMITTEE ON DESIGN (SC-D)

R. J. Basile, *Chair*
G. M. Eisenberg, *Secretary*
R. W. Barnes
M. R. Breach
R. P. Deubler
G. G. Graven
G. L. Hollinger
R. I. Jetter
D. P. Jones
R. W. Mikitka
U. R. Miller
W. J. O'Donnell
R. D. Schueler, Jr.
A. Selz

Subgroup on Design Analysis (SC-D)

D. P. Jones, *Chair*
M. R. Breach
R. G. Brown
P. J. Conlisk
C. S. Gerhard
R. J. Gurdal
C. F. Heberling II
G. L. Hollinger
A. Kalnins
W. J. Koves
O. Maekawa
G. A. Miller
T. G. Seipp
G. Taxacher
E. L. Thomas, Jr.
R. A. Whipple

Subgroup on Elevated Temperature Design (SC-D)

R. I. Jetter, *Chair*
C. Becht IV
J. Cervenka
D. S. Griffin
B. F. Hantz
M. H. Jawad
S. Majumdar
K. A. Moore
W. J. O'Donnell
D. A. Osage
J. S. Porowski
D. F. Shaw
M. S. Shelton

Subgroup on Fatigue Strength (SC-D)

W. J. O'Donnell, *Chair*
P. R. Donavin
R. J. Gurdal
J. A. Hayward
P. Hirschberg
P. Hsu
D. P. Jones
G. Kharshafdjian
C. Lawton
S. Majumdar
M. J. Manjoine
T. Nakamura
G. Taxacher
H. H. Ziada

Subgroup on Openings (SC-D)

M. R. Breach, *Chair*
R. W. Mikitka, *Secretary*
G. G. Graven
V. T. Hwang
J. C. Light
R. B. Luney
J. P. Madden
D. R. Palmer
J. A. Pfeifer
M. D. Rana
E. C. Rodabaugh

Special Working Group on Bolted Flanged Joints (SC-D)

R. W. Mikitka, *Chair*
G. D. Bibel
H. A. Bouzid
A. Chaudouet
E. Michalopoulos
S. N. Pagay
J. R. Payne
P. G. Scheckermann
R. W. Schneider
R. D. Schueler, Jr.
A. Selz
M. S. Shelton

SUBCOMMITTEE ON SAFETY VALVE REQUIREMENTS (SC-SVR)

S. F. Harrison, Jr., *Chair*
J. A. West, *Vice Chair*
U. D'Urso, *Secretary*
J. F. Ball
S. Cammeresi
J. A. Cox
R. D. Danzy
D. B. Demichael
R. J. Doelling
J. P. Glaspie
H. I. Gregg
W. F. Hart
C. A. Neumann
T. M. Parks
D. K. Parrish
D. J. Scallan
J. C. Standfast
Z. Wang

Subgroup on Design (SC-SVR)

J. A. West, *Chair*
C. E. Beair
R. D. Danzy
R. J. Doelling
H. I. Gregg
D. Miller
T. Patel
T. R. Tarbay

Subgroup on General Requirements (SC-SVR)

D. B. Demichael, *Chair*
J. F. Ball
G. Brazier
J. P. Glaspie
C. A. Neumann
T. M. Parks
D. K. Parrish
J. W. Ramsey
J. W. Richardson
J. C. Standfast

Subgroup on Testing (SC-SVR)

J. A. Cox, *Chair*
S. Cammeresi
G. D. Goodson
W. F. Hart
K. G. Roth
D. J. Scallan
Z. Wang

INTRODUCTION

SCOPE

U-1 SCOPE

U-1(a)

U-1(a)(1) The Foreword provides the basis for the rules described in this Division.

U-1(a)(2) For the scope of this Division, pressure vessels are containers for the containment of pressure, either internal or external. This pressure may be obtained from an external source, or by the application of heat from a direct or indirect source, or any combination thereof.

U-1(a)(3) This Division contains mandatory requirements, specific prohibitions, and nonmandatory guidance for pressure vessel materials, design, fabrication, examination, inspection, testing, certification, and pressure relief. The Code does not address all aspects of these activities, and those aspects which are not specifically addressed should not be considered prohibited. Engineering judgment must be consistent with the philosophy of this Division, and such judgments must never be used to overrule mandatory requirements or specific prohibitions of this Division. See also informative and nonmandatory guidance regarding metallurgical phenomena in Appendix A of Section II, Part D.

U-1(b) This Division is divided into three Subsections, Mandatory Appendices, and Nonmandatory Appendices. Subsection A consists of Part UG, covering the general requirements applicable to all pressure vessels. Subsection B covers specific requirements that are applicable to the various methods used in the fabrication of pressure vessels. It consists of Parts UW, UF, and UB dealing with welded, forged, and brazed methods, respectively. Subsection C covers specific requirements applicable to the several classes of materials used in pressure vessel construction. It consists of Parts UCS, UNF, UHA, UCI, UCL, UCD, UHT, ULW, and ULT dealing with carbon and low alloy steels, nonferrous metals, high alloy steels, cast iron, clad and lined material, cast ductile iron, ferritic steels with properties enhanced by heat treatment, layered construction, and low temperature materials, respectively. Section II, Part D also contains tables of maximum allowable stress values for these classes of materials.

The Mandatory Appendices address specific subjects not covered elsewhere in this Division, and their requirements are mandatory when the subject covered is included in construction under this Division. The Nonmandatory Appendices provide information and suggested good practices.

U-1(c)

U-1(c)(1) The scope of this Division has been established to identify the components and parameters considered in formulating the rules given in this Division. Laws or regulations issued by municipality, state, provincial, federal, or other enforcement or regulatory bodies having jurisdiction at the location of an installation establish the mandatory applicability of the Code rules, in whole or in part, within their jurisdiction. Those laws or regulations may require the use of this Division of the Code for vessels or components not considered to be within its Scope. These laws or regulations should be reviewed to determine size or service limitations of the coverage which may be different or more restrictive than those given here.

U-1(c)(2) Based on the Committee's consideration, the following classes of vessels are not included in the scope of this Division; however, any pressure vessel which meets all the applicable requirements of this Division may be stamped with the Code U Symbol:

(a) those within the scope of other Sections;

(b) fired process tubular heaters;

(c) pressure containers which are integral parts or components of rotating or reciprocating mechanical devices, such as pumps, compressors, turbines, generators, engines, and hydraulic or pneumatic cylinders where the primary design considerations and/or stresses are derived from the functional requirements of the device;

(d) except as covered in U-1(f), structures whose primary function is the transport of fluids from one location to another within a system of which it is an integral part, that is, piping systems;

(e) piping components, such as pipe, flanges, bolting, gaskets, valves, expansion joints, fittings, and the pressure containing parts of other components, such as strainers and devices which serve such purposes as mixing, separating, snubbing, distributing, and metering or

controlling flow, provided that pressure containing parts of such components are generally recognized as piping components or accessories;

(f) a vessel for containing water[1] under pressure, including those containing air the compression of which serves only as a cushion, when none of the following limitations are exceeded:

(1) a design pressure of 300 psi (2 MPa);

(2) a design temperature of 210°F (99°C);

(g) a hot water supply storage tank heated by steam or any other indirect means when none of the following limitations is exceeded:

(1) a heat input of 200,000 Btu/hr (58.6 kW);

(2) a water temperature of 210°F (99°C);

(3) a nominal water containing capacity of 120 gal (450 L);

A05 *(h)* vessels having an internal or external operating pressure (see 3-2) not exceeding 15 psi (100 kPa) with no limitation on size [see UG-28(f) and 9-1(c)];

(i) vessels having an inside diameter, width, height, or cross section diagonal not exceeding 6 in. (152 mm), with no limitation on length of vessel or pressure;

(j) pressure vessels for human occupancy.[2]

U-1(d) The rules of this Division have been formulated on the basis of design principles and construction practices applicable to vessels designed for pressures not exceeding 3000 psi (20 MPa). For pressures above 3000 psi (20 MPa), deviations from and additions to these rules usually are necessary to meet the requirements of design principles and construction practices for these higher pressures. Only in the event that after having applied these additional design principles and construction practices the vessel still complies with all of the requirements of this Division may it be stamped with the applicable Code symbol.

U-1(e) In relation to the geometry of pressure containing parts, the scope of this Division shall include the following:

U-1(e)(1) where external piping; other pressure vessels including heat exchangers; or mechanical devices, such as pumps, mixers, or compressors, are to be connected to the vessel:

(a) the welding end connection for the first circumferential joint for welded connections [see UW-13(g)];

(b) the first threaded joint for screwed connections;

(c) the face of the first flange for bolted, flanged connections;

(d) the first sealing surface for proprietary connections or fittings;

U-1(e)(2) where nonpressure parts are welded directly to either the internal or external pressure retaining surface of a pressure vessel, this scope shall include the design, fabrication, testing, and material requirements established for nonpressure part attachments by the applicable paragraphs of this Division;[3]

U-1(e)(3) pressure retaining covers for vessel openings, such as manhole and handhole covers;

U-1(e)(4) the first sealing surface for proprietary fittings or components for which rules are not provided by this Division, such as gages, instruments, and nonmetallic components.

U-1(f) The scope of the Division includes provisions for pressure relief devices necessary to satisfy the requirements of UG-125 through UG-136 and Appendix 11.

U-1(g) Unfired steam boilers as defined in Section I shall be constructed in accordance with the rules of Section I or this Division [see UG-125(b) and UW-2(c)].

The following pressure vessels in which steam is generated shall be constructed in accordance with the rules of this Division:

U-1(g)(1) vessels known as evaporators or heat exchangers;

U-1(g)(2) vessels in which steam is generated by the use of heat resulting from operation of a processing system containing a number of pressure vessels such as used in the manufacture of chemical and petroleum products;

U-1(g)(3) vessels in which steam is generated but not withdrawn for external use.

U-1(h) Pressure vessels or parts subject to direct firing from the combustion of fuel (solid, liquid, or gaseous), which are not within the scope of Sections I, III, or IV may be constructed in accordance with the rules of this Division [see UW-2(d)].

U-1(i) Gas fired jacketed steam kettles with jacket operating pressures not exceeding 50 psi (345 kPa) may be constructed in accordance with the rules of this Division (see Appendix 19).

U-1(j) Pressure vessels exclusive of those covered in U-1(c), U-1(g), U-1(h), and U-1(i) that are not required by the rules of this Division to be fully radiographed,

[1] The water may contain additives provided the flash point of the aqueous solution at atmospheric pressure is 185°F or higher. The flash point shall be determined by the methods specified in ASTM D 93 or in ASTM D 56, whichever is appropriate.

[2] Requirements for pressure vessels for human occupancy are covered by ANSI/ASME PVHO-1.

[3] These requirements for design, fabrication, testing, and material for nonpressure part attachments do not establish the length, size, or shape of the attachment material. Pads and standoffs are permitted and the scope can terminate at the next welded or mechanical joint.

TABLE U-3
YEAR OF ACCEPTABLE EDITION OF REFERENCED STANDARDS IN THIS DIVISION

04
A05

Title	Number	Year
Seat Tightness of Pressure Relief Valves	API Std. 527	1991
Unified Inch Screw Threads (UN and UNR Thread Form)	ASME B1.1	1989 (R2001)(2)
Pipe Threads, General Purpose (Inch)	ANSI/ASME B1.20.1	1983 (R1992)(2)
Cast Iron Pipe Flanges and Flanged Fittings, Classes 25, 125, 250, and 800	ASME/ANSI B16.1	1989
Pipe Flanges and Flanged Fittings	ASME B16.5	1996(1)
Factory-Made Wrought Buttwelding Fittings	ASME B16.9	2001
Forged Fittings, Socket-Welding and Threaded	ASME B16.11	2001
Cast Bronze Threaded Fittings Classes 125 and 250	ANSI/ASME B16.15	1985
Metallic Gaskets for Pipe Flanges — Ring-Joint, Spiral Wound, and Jacketed	ASME B16.20	1993
Cast Copper Alloy Pipe Flanges and Flanged Fittings, Class 150, 300, 400, 600, 900, 1500, and 2500	ASME B16.24	1991
Ductile Iron Pipe Flanges and Flanged Fittings, Class 150 and 300	ASME/ANSI B16.42	1987
Large Diameter Steel Flanges, NPS 26 Through NPS 60	ASME B16.47	1996
Square and Hex Nuts (Inch Series)	ASME/ANSI B18.2.2	1987 (R1994)(2)
Welded and Seamless Wrought Steel Pipe	ASME B36.10M	2000
Guidelines for Pressure Boundary Bolted Flange Joint Assembly	ASME PCC-1	2000
Pressure Relief Devices	ASME PTC 25	2001
Qualifications for Authorized Inspection	ASME QAI-1	(3)
ASNT Central Certification Program	ACCP	Rev 3, November 1997
ASNT Standard for Qualification and Certification of Nondestructive Testing Personnel	CP-189	1995
Recommended Practice for Personnel Qualification and Certification in Nondestructive Testing	SNT-TC-1A	1996, A98
Standard Test Methods for Flash Point by Tag Closed Tester	ASTM D 56	1987
Standard Test Methods for Flash Point by Pensky-Martens Closed Tester	ASTM D 93	1990

TABLE U-3
YEAR OF ACCEPTABLE EDITION OF REFERENCED STANDARDS IN THIS DIVISION
(CONT'D)

Title	Number	Year
Methods of Tension Testing of Metallic Materials	ASTM E 8	1990
Methods of Verification and Classification of Extensometers	ASTM E 83	1990
Reference Photographs for Magnetic Particle Indications on Ferrous Castings	ASTM E 125	1963 (R1985)(2)
Hardness Conversion Tables for Metals	ASTM E 140	1988
Standard Reference Radiographs for Heavy-Walled (2 to 4½-in. (51 to 114-mm)) Steel Castings	ASTM E 186	1998
Method of Conducting Drop Weight Test to Determine Nil Ductility Transition Temperature of Ferritic Steel	ASTM E 208	1987a
Standard Reference Radiographs for Heavy-Walled (4½ to 12-in. (114 to 305-mm)) Steel Castings	ASTM E 280	1998
Standard Reference Radiographs for Steel Castings up to 2 in. (51 mm) in Thickness	ASTM E 446	1998
Marking and Labeling Systems	ANSI/UL-969	1991

NOTES:
(1) See UG-11(a)(2).
(2) R — Reaffirmed.
(3) See UG-91.

SUBSECTION A
GENERAL REQUIREMENTS

PART UG
GENERAL REQUIREMENTS FOR ALL METHODS OF CONSTRUCTION AND ALL MATERIALS

UG-1 SCOPE

The requirements of Part UG are applicable to all pressure vessels and vessel parts and shall be used in conjunction with the specific requirements in Subsections B and C and the Mandatory Appendices that pertain to the method of fabrication and the material used.

MATERIALS

UG-4 GENERAL

A05 *(a)* Material subject to stress due to pressure shall conform to one of the specifications given in Section II, Part D, Subpart 1, Tables 1A, 1B, and 3, including all applicable notes in the tables, and shall be limited to those that are permitted in the applicable Part of Subsection C, except as otherwise permitted in UG-9, UG-10, UG-11, UG-15, and the Mandatory Appendices. Material may be identified as meeting more than one material specification and/or grade provided the material meets all requirements of the identified material specification(s) and/or grade(s) [see UG-23(a)].

(b) Material for nonpressure parts, such as skirts, supports, baffles, lugs, clips, and extended heat transfer surfaces, need not conform to the specifications for the material to which they are attached or to a material specification permitted in this Division, but if attached to the vessel by welding shall be of weldable quality [see UW-5(b)]. The allowable stress values for material not identified in accordance with UG-93 shall not exceed 80% of the maximum allowable stress value permitted for similar material in Subsection C.

(c) Material covered by specifications in Section II is not restricted as to the method of production unless so stated in the specification, and so long as the product complies with the requirements of the specification. (See UG-85.)

(d) Materials other than those allowed by this Division may not be used, unless data thereon are submitted to and approved by the Boiler and Pressure Vessel Committee in accordance with Appendix 5 in Section II, Part D.

(e) Materials outside the limits of size and/or thickness given in the title or scope clause of the specifications given in Section II, and permitted by the applicable part of Subsection C, may be used if the material is in compliance with the other requirements of the specification,[1] and no size or thickness limitation is given in the stress tables. In those specifications in which chemical composition or mechanical properties vary with size or thickness, materials outside the range shall be required to conform to the composition and mechanical properties shown for the nearest specified range.

[1] In some instances the limitations of the scope clause in the material specifications are based on a very realistic maximum. It is recommended that the designer and/or fabricator confer with the material manufacturer or supplier before proceeding, thus assuring himself that except for size or thickness, all requirements of the material specification will be met and so certified.

(f) It is recommended that the user or his designated agent assure himself that materials used for the construction of the vessels will be suitable for the intended service with respect to retention of satisfactory mechanical properties, and resistance to corrosion, erosion, oxidation, and other deterioration during their intended service life. See also informative and nonmandatory guidance regarding metallurgical phenomena in Appendix A of Section II, Part D.

UG-5 PLATE[2]

Plate used in the construction of pressure parts of pressure vessels shall conform to one of the specifications in Section II for which allowable stress values are given in the tables referenced in UG-23, except as otherwise provided in UG-4, UG-10, UG-11, and UG-15.

A05 UG-6 FORGINGS

(a) Forged material may be used in pressure vessel construction provided the material has been worked sufficiently to remove the coarse ingot structure. Specifications and maximum allowable stress values for acceptable forging materials are given in the tables referenced in UG-23. (See Part UF for forged vessels.)

(b) Forged rod or bar may only be used within the limitations of UG-14.

UG-7 CASTINGS

Cast material may be used in the construction of pressure vessels and vessel parts. Specifications and maximum allowable stress values for acceptable casting materials are given in the tables referenced in UG-23. These allowable stress values shall be multiplied by the applicable casting quality factor given in UG-24 for all materials except cast iron.

UG-8 PIPE AND TUBES

(a) Pipe and tubes of seamless or welded[3] construction conforming to one of the specifications given in Section II may be used for shells and other parts of pressure vessels. Allowable stress values for the materials used in pipe and tubes are given in the tables referenced in UG-23.

(b) Integrally finned tubes may be made from tubes that conform in every respect with one of the specifications given in Section II. These tubes may be used under the following conditions.

(1) The tubes, after finning, shall have a temper or condition which conforms to one of those provided in the governing specifications, or, when specified, they may be furnished in the "as-fabricated condition" where the finned portions of the tube are in the cold worked temper (as-finned) resulting from the finning operation, and the unfinned portions in the temper of the tube prior to finning.

(2) The maximum allowable stress value for the finned tube shall be that given in the tables referenced in UG-23 for the tube before finning except as permitted in (3) below.

(3) The maximum allowable stress value for a temper or condition that has a higher stress value than that of the tube before finning may be used provided that qualifying mechanical property tests demonstrate that such a temper or condition is obtained and conforms to one of those provided in the governing specifications in Section II, and provided that allowable stress values have been established in the tables referenced in UG-23 for the tube material used. The qualifying mechanical property tests shall be made on specimens of finned tube from which the fins have been removed by machining. The frequency of tests shall be as required in the unfinned tube specification.

(4) The maximum allowable internal or external working pressure of the tube shall be based on the root diameter and the minimum wall of the finned section, or the outside diameter and wall of the unfinned section together with appropriate stress values, whichever results in the lower maximum allowable working pressure. Alternatively, the maximum allowable external pressure for tubes with integral fins may be established under the rules of Appendix 23.

(5) In addition to the tests required by the governing specifications, each tube after finning shall be subjected to a pneumatic test or a hydrostatic test as indicated below. UG-90(c)(1)(i) requirement for a visual inspection by the Inspector does not apply to either of these tests.

(a) an internal pneumatic test of not less than 250 psi (1.7 MPa) for 5 sec without evidence of leakage. The test method shall permit easy visual detection of any leakage such as immersion of the tube under water or a pressure differential method.[4]

(b) an individual tube hydrostatic test in accordance with UG-99 which permits complete examination of the tube for leakage.

[2] The term "plate" for the purpose of this usage includes sheet and strip also.

[3] Pipe and tubing fabricated by fusion welding, with filler metal added, may not be used in Code construction unless it is fabricated in accordance with Code rules as a pressure part.

[4] The pressure differential method is described in "Materials Research Standards," Vol. 1, No. 7, July 1961, published by ASTM.

of the completed vessel, with the concurrence of the Authorized Inspector, may remove the nameplate. The removal of the nameplate shall be noted in the "Remarks" section of the vessel Manufacturer's Data Report. The nameplate shall be destroyed. The rules of (a), (b), and (c) below shall not be applied to quick-actuating closures [UG-35(b)].

(a) Cast, Forged, Rolled, or Die Formed Standard Pressure Parts

A05 *(1)* Pressure parts, such as pipe fittings, flanges, nozzles, welding necks, welding caps, manhole frames and covers, that are wholly formed by casting, forging, rolling, or die forming shall not require inspection, identification in accordance with UG-93(a) or (b), or Partial Data Reports. Standard pressure parts which comply with some ASME/ANSI standard[5] shall be made of materials permitted by this Division or of materials specifically listed in an ASME/ANSI product standard listed elsewhere in this Division. Standard pressure parts which comply with a Manufacturer's standard[6,7] shall be made of materials permitted by this Division. Parts made to either an ASME/ANSI standard or Manufacturer's standard shall be marked with the name or trademark of the parts manufacturer and such other markings as are required by the standard. Such markings shall be considered as the parts Manufacturer's certification that the product complies with the material specifications and standards indicated and is suitable for service at the rating indicated. The intent of this paragraph will have been met if, in lieu of the detailed marking on the part itself, the parts described herein have been marked in any permanent or temporary manner that will serve to identify the part with the parts manufacturer's written listing of the particular items and such listings are available for examination by the Inspector.

(2) Flanges and flanged fittings may be used at the pressure–temperature ratings specified in the appropriate standard listed in this Division. Other pressure–temperature ratings may be used if the flange satisfies the requirements of UG-11(a)(1) and, using the specified gaskets and bolting, satisfies the design requirements of UG-34 or Appendix 2 of this Division.

(3) Parts of small size falling within this category for which it is difficult or impossible to obtain identified material or which may be stocked and for which identification in accordance with UG-93 cannot be economically obtained and are not customarily furnished, and which do not appreciably affect the safety of the vessel, may be used for relatively unimportant parts or parts stressed to not more than 50% of the stress value permitted by this Division provided they are suitable for the purpose intended and are acceptable to the Inspector [see (a)(1) above and UG-4(b)]. The Manufacturer of the vessel to be marked with the Code Symbol shall satisfy himself that the part is suitable for the design conditions specified for the vessel in accordance with the rules of this Division.

(b) Cast, Forged, Rolled, or Die Formed Nonstandard Pressure Parts. Pressure parts such as shells, heads, removable doors, and pipe coils that are wholly formed by casting, forging, rolling, or die forming may be supplied basically as materials. All such parts shall be made of materials permitted under this Division and the Manufacturer of the part shall furnish identification in accordance with UG-93. Such parts shall be marked with the name or trademark of the parts Manufacturer and with such other markings as will serve to identify the particular parts with accompanying material identification. The Manufacturer of the vessel to be marked with the Code Symbol shall satisfy himself that the part is suitable for the design conditions specified for the completed vessel in accordance with the rules of this Division.

(c) Welded Standard Pressure Parts for Use Other Than the Shell or Heads of a Vessel. Pressure parts, such as welded standard pipe fittings, welding caps, and flanges that are fabricated by one of the welding processes recognized by this Division shall not require inspection, identification in accordance with UG-93(a) or (b), or Partial Data Reports provided:

(1) standard pressure parts which comply with some ASME/ANSI product standard[5] shall be made of materials permitted by this Division or of materials specifically listed in an ASME/ANSI product standard listed elsewhere in this Division. Standard pressure parts which comply with a Manufacturer's standard[6,7] shall be made of materials permitted by this Division.

(2) welding for pressure parts which comply with a Manufacturer's standard[6,7] shall comply with the requirements of UW-26(a), (b), and (c) and UW-27 through UW-40. Welding for pressure parts which comply with some ASME/ANSI product standard[5] shall comply with the requirements of UW-26(a), (b), and (c) and

[5] These are pressure parts which comply with some ASME/ANSI product standard accepted by reference in UG-44. The ASME/ANSI product standard establishes the basis for the pressure–temperature rating and marking unless modified in UG-44.

[6] These are pressure parts that comply with a parts Manufacturer's standard that defines the pressure–temperature rating marked on the part and described in the parts Manufacturer's literature. The Manufacturer of the completed vessel shall satisfy him/herself that all such parts used comply with the applicable rules of this Division and are suitable for the design conditions of the completed vessel.

[7] Pressure parts may be in accordance with an ASME/ANSI product standard not covered by footnote 5, but such parts shall satisfy the requirements applicable to a parts Manufacturer's standard and footnote 6.

UW-27 through UW-40, or with the welding requirements of SA-234. Markings, where applicable, or Certification by the parts Manufacturer where markings are not applicable, shall be accepted as evidence of compliance with the above welding requirements. Such parts shall be marked as required by UG-11(a)(1).

Such parts shall be marked with the name or trademark of the parts manufacturer and with such other markings as will serve to identify the materials of which the parts are made. Such markings shall be considered as the parts Manufacturer's certification that the product complies with (1) above. A statement by the parts Manufacturer that all welding complies with Code requirements shall be accepted as evidence that the product complies with (2) above.

(3) if radiography or postweld heat treatment is required by the rules of this Division, it may be performed either in the plant of the parts Manufacturer or in the plant of the manufacturer of the vessel to be marked with the Code Symbol.

If the radiographing is done under the control of the parts manufacturer, the completed radiographs, properly identified, with a radiographic inspection report, shall be forwarded to the vessel Manufacturer and shall be available to the Inspector.

(4) if heat treatment is performed at the plant of the parts manufacturer, certification by the parts manufacturer that such treatment was performed shall be accepted as evidence of compliance with applicable Code paragraphs. This certification shall be available to the Inspector.

(d) Parts furnished under the provisions of (a), (b), and (c) above need not be manufactured by a Certificate of Authorization Holder.

UG-12 BOLTS AND STUDS

(a) Bolts and studs may be used for the attachment of removable parts. Specifications, supplementary rules, and maximum allowable stress values for acceptable bolting materials are given in the tables referenced in UG-23.

(b) Studs shall be threaded full length or shall be machined down to the root diameter of the thread in the unthreaded portion, provided that the threaded portions are at least $1\frac{1}{2}$ diameters in length.

Studs greater than eight diameters in length may have an unthreaded portion which has the nominal diameter of the thread, provided the following requirements are met:

(1) the threaded portions shall be at least $1\frac{1}{2}$ diameters in length;

(2) the stud shall be machined down to the root diameter of the thread for a minimum distance of 0.5 diameters adjacent to the threaded portion;

(3) a suitable transition shall be provided between the root diameter and the unthreaded portion; and

(4) particular consideration shall be given to any dynamic loadings.

UG-13 NUTS AND WASHERS

(a) Nuts shall conform to the requirements in the applicable Part of Subsection C (see UCS-11 and UNF-13). They shall engage the threads for the full depth of the nut.

(b) The use of washers is optional. When used, they shall be of wrought materials.

UG-14 RODS AND BARS A05

(a) Rod and bar stock may be used in pressure vessel construction for pressure parts such as flange rings, stiffening rings, frames for reinforced openings, stays and staybolts, and similar parts. Rod and bar materials shall conform to the requirements for bars or bolting in the applicable part of Subsection C.

(b) Except for flanges of all types, hollow cylindrically-shaped parts [up to and including NPS 4 (DN 100)] may be machined from hot-rolled or forged bar, provided that the axial length of the part is approximately parallel to the metal flow lines of the stock. Other parts, such as heads or caps [up to and including NPS 4 (DN 100)], not including flanges, may be machined from hot-rolled or forged bar. Elbows, return bends, tees, and header tees shall not be machined directly from barstock.

UG-15 PRODUCT SPECIFICATION

When there is no material specification listed in Subsection C covering a particular wrought product of a grade, but there is an approved specification listed in Subsection C covering some other wrought product of that grade, the product for which there is no specification may be used provided:

(a) the chemical and physical properties, heat treating requirements, and requirements for deoxidation, or grain size requirements conform to the approved specification listed in Subsection C. The stress values for that specification given in the tables referenced in UG-23 shall be used.

(b) the manufacturing procedures, tolerances, tests, and marking are in accordance with a Section II specification covering the same product form of a similar material;

(c) for the case of welded tubing made of plate, sheet, or strip, without the addition of filler metal, the appropriate stress values are multiplied by a factor of 0.85;

(d) the product is not pipe or tubing fabricated by fusion welding with the addition of filler metal unless it is fabricated in accordance with the rules of this Division as a pressure part;

(e) mill test reports reference the specifications used in producing the material and in addition make reference to this paragraph.

DESIGN

UG-16 GENERAL

(a) The design of pressure vessels and vessel parts shall conform to the general design requirements in the following paragraphs and in addition to the specific requirements for *Design* given in the applicable Parts of Subsections B and C.

(b) Minimum Thickness of Pressure Retaining Components. Except for the special provisions listed below, the minimum thickness permitted for shells and heads, after forming and regardless of product form and material, shall be $1/16$ in. (1.5 mm) exclusive of any corrosion allowance. Exceptions are:

(1) the minimum thickness does not apply to heat transfer plates of plate-type heat exchangers;

(2) this minimum thickness does not apply to the inner pipe of double pipe heat exchangers nor to tubes in shell-and-tube heat exchangers, where such pipes or tubes are NPS 6 (DN 150) and less. This exemption applies whether or not the outer pipe or shell is constructed to Code rules. All other pressure parts of these heat exchangers which are constructed to Code rules must meet the $1/16$ in. (1.5 mm) minimum thickness requirements.

(3) the minimum thickness of shells and heads of unfired steam boilers shall be $1/4$ in. (6 mm) exclusive of any corrosion allowance;

(4) the minimum thickness of shells and heads used in compressed air service, steam service, and water service, made from materials listed in Table UCS-23, shall be $3/32$ in. (2.5 mm) exclusive of any corrosion allowance.

(5) this minimum thickness does not apply to the tubes in air cooled and cooling tower heat exchangers if all the following provisions are met:

(a) the tubes shall not be used for lethal UW-2(a) service applications;

(b) the tubes shall be protected by fins or other mechanical means;

(c) the tube outside diameter shall be a minimum of $3/8$ in. (10 mm) and a maximum of $1\frac{1}{2}$ in. (38 mm);

(d) the minimum thickness used shall not be less than that calculated by the formulas given in UG-27 or 1-1 and in no case less than the greater of the minimum thickness calculated using a design pressure of 500 psi (3.5 MPa) at 70°F (20°C) or 0.022 in. (0.5 mm).

(c) Mill Undertolerance. Plate material shall be ordered not thinner than the design thickness. Vessels made of plate furnished with an undertolerance of not more than the smaller value of 0.01 in. (0.25 mm) or 6% of the ordered thickness may be used at the full design pressure for the thickness ordered. If the specification to which the plate is ordered allows a greater undertolerance, the ordered thickness of the materials shall be sufficiently greater than the design thickness so that the thickness of the material furnished is not more than the smaller of 0.01 in. (0.25 mm) or 6% under the design thickness.

(d) Pipe Undertolerance. If pipe or tube is ordered by its nominal wall thickness, the manufacturing undertolerance on wall thickness shall be taken into account except for nozzle wall reinforcement area requirements in accordance with UG-37 and UG-40. The manufacturing undertolerances are given in the several pipe and tube specifications listed in the applicable Tables in Subsection C. After the minimum wall thickness is determined, it shall be increased by an amount sufficient to provide the manufacturing undertolerance allowed in the pipe or tube specification.

(e) Corrosion Allowance in Design Formulas. The dimensional symbols used in all design formulas throughout this Division represent dimensions in the corroded condition.

UG-17 METHODS OF FABRICATION IN COMBINATION

A vessel may be designed and constructed by a combination of the methods of fabrication given in this Division, provided the rules applying to the respective methods of fabrication are followed and the vessel is limited to the service permitted by the method of fabrication having the most restrictive requirements (see UG-116).

UG-18 MATERIALS IN COMBINATION

Except as specifically prohibited by other rules of this Division, a vessel may be designed and constructed of any combination of materials permitted in Subsection C, provided the applicable rules are followed and the requirements in Section IX for welding dissimilar metals are met.

The requirements for the base metals, HAZ's, and weld metal(s) of a dissimilar metal weldment shall each be applied in accordance with the rules of this Division. (For example, if a carbon steel base metal is joined to a stainless steel base metal with a nickel filler metal, the rules of Part UCS apply to the carbon steel base metal and its HAZ; Part UHA to the stainless steel base metal and its HAZ; and Part UNF to the weld metal.)

NOTE: Because of the different thermal coefficients of expansion of dissimilar materials, caution should be exercised in design and construction under the provisions of this paragraph in order to avoid difficulties in service under extreme temperature conditions, or with unusual restraint of parts such as may occur at points of stress concentration and also because of metallurgical changes occurring at elevated temperatures. [See also *Galvanic Corrosion* in Appendix A, A-440(c), of Section II, Part D.]

UG-19 SPECIAL CONSTRUCTIONS

(a) Combination Units. When a pressure vessel unit consists of more than one independent pressure chamber, operating at the same or different pressures and temperatures, each such pressure chamber (vessel) shall be designed and constructed to withstand the most severe condition of coincident pressure and temperature expected in normal service. Only the parts of chambers which come within the scope of this Division, U-1, need be constructed in compliance with its provisions. Also, see 9-1(c) for jacketed vessels.

(b) Special Shapes. Vessels other than cylindrical and spherical and those for which no design rules are provided in this Division may be designed under the conditions set forth in U-2.

(c) When no design rules are given and the strength of a pressure vessel or vessel part cannot be calculated with a satisfactory assurance of accuracy, the maximum allowable working pressure of the completed vessel shall be established in accordance with the provisions of UG-101.

UG-20 DESIGN TEMPERATURE

(a) Maximum. Except as required in UW-2(d)(3), the maximum temperature used in design shall be not less than the mean metal temperature (through the thickness) expected under operating conditions for the part considered (see 3-2). If necessary, the metal temperature shall be determined by computation or by measurement from equipment in service under equivalent operating conditions.

(b) Minimum. The minimum metal temperature used in design shall be the lowest expected in service except when lower temperatures are permitted by the rules of this Division (see UCS-66 and UCS-160) (See footnote 36). The minimum mean metal temperature shall be determined by the principles described in (a) above. Consideration shall include the lowest operating temperature, operational upsets, autorefrigeration, atmospheric temperature, and any other sources of cooling [except as permitted in (f)(3) below for vessels meeting the requirements of (f) below]. The MDMT marked on the nameplate shall correspond to a coincident pressure equal to the MAWP. When there are multiple MAWP's, the largest value shall be used to establish the MDMT marked on the nameplate. Additional MDMT's corresponding with other MAWP's may also be marked on the nameplate (See footnote 36).

A05 *(c)* Design temperatures that exceed the temperature limit in the applicability column shown in Section II, Part D, Subpart 1, Tables 1A, 1B, and 3 are not permitted. In addition, design temperatures for vessels under external pressure shall not exceed the maximum temperatures given on the external pressure charts.

(d) The design of zones with different metal temperatures may be based on their determined temperatures.

(e) Suggested methods for obtaining the operating temperature of vessel walls in service are given in Appendix C.

(f) Impact testing per UG-84 is not mandatory for pressure vessel materials which satisfy all of the following.

(1) The material shall be limited to P-No. 1, Gr. No. 1 or 2, and the thickness, as defined in UCS-66(a) [see also General Note (1) in Fig. UCS-66.2], shall not exceed that given in (a) or (b) below:

(a) ½ in. (13 mm) for materials listed in Curve A of Fig. UCS-66;

(b) 1 in. (25 mm) for materials listed in Curve B, C, or D of Fig. UCS-66.

(2) The completed vessel shall be hydrostatically tested per UG-99(b) or (c) or 27-4.

(3) Design temperature is no warmer than 650°F (345°C) nor colder than −20°F (−29°C). Occasional operating temperatures colder than −20°F (−29°C) are acceptable when due to lower seasonal atmospheric temperature.

(4) The thermal or mechanical shock loadings are not a controlling design requirement. (See UG-22.)

(5) Cyclical loading is not a controlling design requirement. (See UG-22.)

UG-21 DESIGN PRESSURE[8]

Vessels covered by this Division of Section VIII shall be designed for at least the most severe condition of coincident pressure and temperature expected in normal operation. For this condition and for test conditions, the maximum difference in pressure between the inside and outside of a vessel, or between any two chambers of a combination unit, shall be considered [see UG-98, UG-99(e), and 3-2].

[8] It is recommended that a suitable margin be provided above the pressure at which the vessel will be normally operated to allow for probable pressure surges in the vessel up to the setting of the pressure relieving devices (see UG-134).

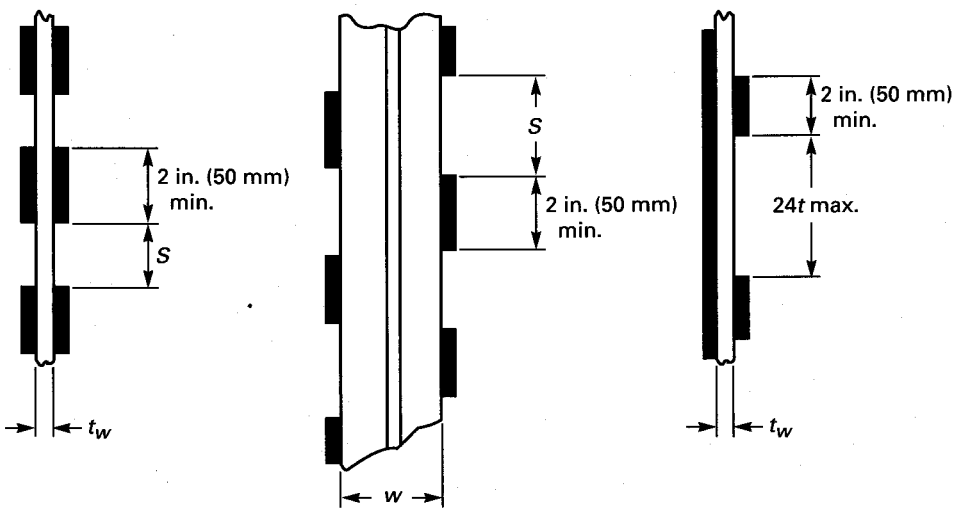

In-line Intermittent Weld | **Staggered Intermittent Weld** | **Continuous Fillet Weld One Side, Intermittent Other Side**

$S \leq 8t$ external stiffeners
$S \leq 12t$ internal stiffeners

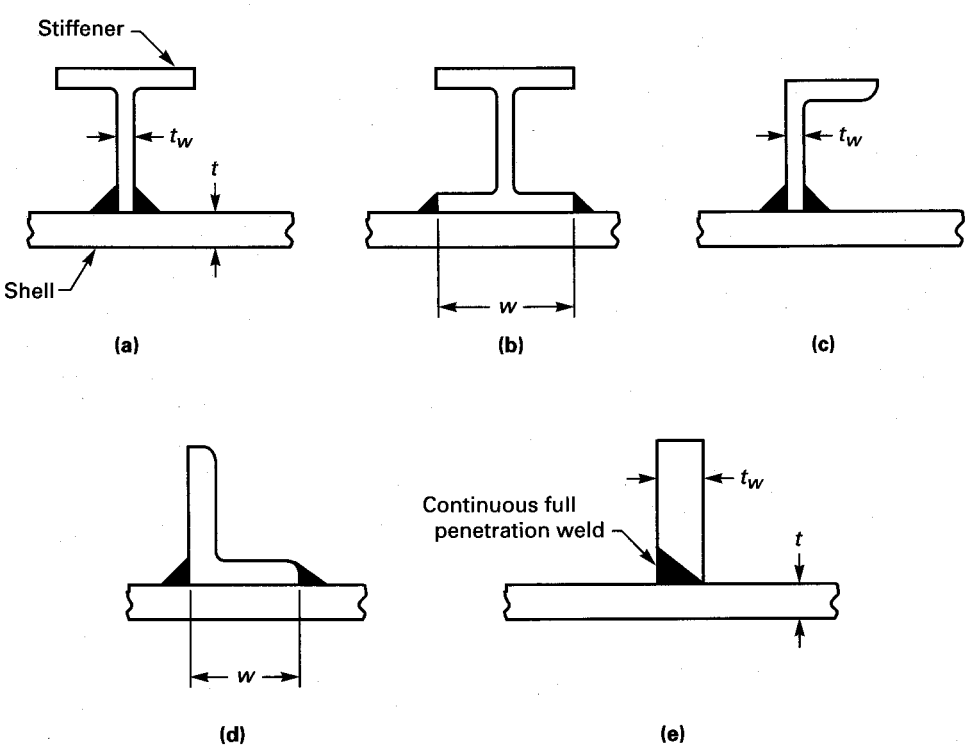

FIG. UG-30 SOME ACCEPTABLE METHODS OF ATTACHING STIFFENING RINGS

(1) Additional wall thickness should be provided when corrosion, erosion, or wear due to cleaning operations is expected.

(2) Where ends are threaded, additional wall thickness is to be provided in the amount of $0.8/n$ in. ($20/n$ mm) [where n equals the number of threads per inch (25.4 mm)].

NOTE: The requirements for rolling, expanding, or otherwise seating tubes in tube plates may require additional wall thickness and careful choice of materials because of possible relaxation due to differential expansion stresses.

UG-32 FORMED HEADS, AND SECTIONS, PRESSURE ON CONCAVE SIDE

A05 *(a)* The minimum required thickness at the thinnest point after forming[17] of ellipsoidal, torispherical, hemispherical, conical, and toriconical heads under pressure on the concave side (plus heads) shall be computed by the appropriate formulas in this paragraph,[18] except as permitted by Appendix 32. Heads with bolting flanges shall meet the requirements of UG-35.1. In addition, provision shall be made for any of the loadings listed in UG-22. The provided thickness of the heads shall also meet the requirements of UG-16, except as permitted in Appendix 32.

(b) The thickness of an unstayed ellipsoidal or torispherical head shall in no case be less than the required thickness of a seamless hemispherical head divided by the efficiency of the head-to-shell joint.

A05 *(c)* The symbols defined below are used in the formulas of this paragraph:

t = minimum required thickness of head after forming

t_s = minimum specified thickness of head after forming, in. (mm). t_s shall be $\geq t$

P = internal design pressure (see UG-21)

D = inside diameter of the head skirt; or inside length of the major axis of an ellipsoidal head; or inside diameter of a conical head at the point under consideration, measured perpendicular to the longitudinal axis

D_i = inside diameter of the conical portion of a toriconical head at its point of tangency to the knuckle, measured perpendicular to the axis of the cone
$= D - 2r(1 - \cos\alpha)$

r = inside knuckle radius

S = maximum allowable stress value in tension as given in the tables referenced in UG-23, except as limited in UG-24 and (e) below.

E = lowest efficiency of any joint in the head; for hemispherical heads this includes head-to-shell joint; for welded vessels, use the efficiency specified in UW-12

L = inside spherical or crown radius. The value of L for ellipsoidal heads shall be obtained from Table UG-37.

α = one-half of the included (apex) angle of the cone at the center line of the head (see Fig. 1-4)

(d) Ellipsoidal Heads With $t_s/L \geq 0.002$. The required thickness of a dished head of semiellipsoidal form, in which half the minor axis (inside depth of the head minus the skirt) equals one-fourth of the inside diameter of the head skirt, shall be determined by A05

$$t = \frac{PD}{2SE - 0.2P} \quad \text{or} \quad P = \frac{2SEt}{D + 0.2t} \qquad (1)$$

NOTE: For ellipsoidal heads with $t_s/L < 0.002$, the rules of 1-4(f) shall also be met.

An acceptable approximation of a 2:1 ellipsoidal head is one with a knuckle radius of $0.17D$ and a spherical radius of $0.90D$.

(e) Torispherical Heads With $t_s/L \geq 0.002$. The required thickness of a torispherical head for the case in which the knuckle radius is 6% of the inside crown radius and the inside crown radius equals the outside diameter of the skirt [see UG-32(j)] shall be determined by A05

$$t = \frac{0.885PL}{SE - 0.1P} \quad \text{or} \quad P = \frac{SEt}{0.885L + 0.1t} \qquad (2)$$

NOTE: For torispherical heads with $t_s/L < 0.002$, the rules of 1-4(f) shall also be met.

Torispherical heads made of materials having a specified minimum tensile strength exceeding 70,000 psi (500 MPa) shall be designed using a value of S equal to 20,000 psi (150 MPa) at room temperature and reduced in proportion to the reduction in maximum allowable stress values at temperature for the material (see UG-23).

(f) Hemispherical Heads. When the thickness of a hemispherical head does not exceed $0.356L$, or P does not exceed $0.665SE$, the following formulas shall apply:

$$t = \frac{PL}{2SE - 0.2P} \quad \text{or} \quad P = \frac{2SEt}{L + 0.2t} \qquad (3)$$

[17] In order to ensure that a finished head is not less than the minimum thickness required, it is customary to use a thicker plate to take care of possible thinning during the process of forming. The neck of an opening in a head with an integrally flanged opening will thin out due to the fluing operation. This is permissible provided the neck thickness is not less than the thickness required for a cylindrical shell subject to internal and/or external pressure, as applicable, and having an inside diameter equal to the maximum diameter of the opening [see UG-38(a) and UG-46(j)].

[18] Formulas in terms of outside dimensions and for heads of other proportions are given in 1-4 together with illustrative examples.

(g) Conical Heads and Sections (Without Transition Knuckle). The required thickness of conical heads or conical shell sections that have a half apex-angle α not greater than 30 deg shall be determined by

$$t = \frac{PD}{2\cos\alpha(SE - 0.6P)} \text{ or } P = \frac{2SEt\cos\alpha}{D + 1.2t\cos\alpha} \quad (4)$$

A reinforcing ring shall be provided when required by the rule in 1-5(d) and (e).

Conical heads or sections having a half apex-angle α greater than 30 deg. without a transition knuckle shall comply with Formula (4) and 1-5(g).

(h) Toriconical Heads and Sections. The required thickness of the conical portion of a toriconical head or section, in which the knuckle radius is neither less than 6% of the outside diameter of the head skirt nor less than three times the knuckle thickness, shall be determined by Formula (4) in (g) above, using D_i in place of D.

The required thickness of the knuckle shall be determined by Formula (3) of 1-4(d) in which

$$L = \frac{D_i}{2\cos\alpha}$$

Toriconical heads or sections may be used when the angle $\alpha \leq 30$ deg. and are mandatory for conical head designs when the angle α exceeds 30 deg, unless the design complies with 1-5(g).

(i) When an ellipsoidal, torispherical, hemispherical, conical, or toriconical head is of a lesser thickness than required by the rules of this paragraph, it shall be stayed as a flat surface according to the rules of UG-47 for braced and stayed flat plates.

(j) The inside crown radius to which an unstayed head is dished shall be not greater than the outside diameter of the skirt of the head. The inside knuckle radius of a torispherical head shall be not less than 6% of the outside diameter of the skirt of the head but in no case less than 3 times the head thickness.

(k) A dished head with a reversed skirt may be used in a pressure vessel provided the maximum allowable working pressure for the head is established in accordance with the requirements of UG-101.

(l) All formed heads, thicker than the shell and concave to pressure, intended for butt welded attachment, shall have a skirt length sufficient to meet the requirements of Fig. UW-13.1, when a tapered transition is required. All formed heads concave to pressure and intended for butt welded attachment need not have an integral skirt when the thickness of the head is equal to or less than the thickness of the shell. When a skirt is provided, its thickness shall be at least that required for a seamless shell of the same inside diameter.

(m) Heads concave to pressure, intended for attachment by brazing, shall have a skirt length sufficient to meet the requirements for circumferential joints in Part UB.

(n) Any taper at a welded joint within a formed head shall be in accordance with UW-9. The taper at a circumferential welded joint connecting a formed head to a main shell shall meet the requirements of UW-13 for the respective type of joint shown therein.

(o) If a torispherical, ellipsoidal, or hemispherical head is formed with a flattened spot or surface, the diameter of the flat spot shall not exceed that permitted for flat heads as given by Formula (1) in UG-34, using $C = 0.25$.

(p) Openings in formed heads under internal pressure shall comply with the requirements of UG-36 through UG-46.

(q) A stayed jacket that completely covers a formed inner head or any of the types included in this paragraph shall also meet the requirements of UG-47(c).

UG-33 FORMED HEADS, PRESSURE ON CONVEX SIDE

(a) General. The required thickness at the thinnest point after forming [see footnote 17, UG-32(a)] of ellipsoidal, torispherical, hemispherical, toriconical, and conical heads and conical segments under pressure on the convex side (minus heads) shall be computed by the appropriate formulas given in this paragraph (see UG-16). Heads with bolting flanges shall meet the requirements of UG-35.1. In addition, provisions shall be made for any other loading given in UG-22. The required thickness for heads due to pressure on the convex side shall be determined as follows. A05

(1) For ellipsoidal and torispherical heads, the required thickness shall be the greater of the following:

(a) the thickness computed by the procedure given in UG-32 for heads with pressure on the concave side (plus heads) using a design pressure 1.67 times the design pressure on the convex side, assuming a joint efficiency $E = 1.00$ for all cases; or

(b) the thickness as computed by the appropriate procedure given in (d) or (e) below.

In determining the maximum allowable working pressure on the convex side of ellipsoidal or torispherical heads, reverse the procedures in (a)(1)(a) and (a)(1)(b) above, and use the smaller of the pressures obtained.

(2) For hemispherical heads, the required thickness shall be determined by the rules given in (c) below.

(3) For conical and toriconical heads and conical sections, the required thickness shall be determined by the rules given in (f) below.

(b) Nomenclature. The nomenclature defined below is used in this paragraph. Figure 1-4 shows principal dimensions of typical heads.

A, B, E, and *P* are as defined in UG-28(b)

D_o = outside diameter of the head skirt

$D_o/2h_o$ = ratio of the major to the minor axis of ellipsoidal heads, which equals the outside diameter of the head skirt divided by twice the outside height of the head (see Table UG-33.1)

TABLE UG-33.1
VALUES OF SPHERICAL RADIUS FACTOR K_o FOR ELLIPSOIDAL HEAD WITH PRESSURE ON CONVEX SIDE
Interpolation Permitted for Intermediate Values

$D_o/2h_o$	...	3.0	2.8	2.6	2.4	2.2
K_o	...	1.36	1.27	1.18	1.08	0.99
$D_o/2h_o$	2.0	1.8	1.6	1.4	1.2	1.0
K_o	0.90	0.81	0.73	0.65	0.57	0.50

t_e = effective thickness of conical section
= $t \cos \alpha$
L_c = axial length of conical section, excluding the knuckle, of a toriconical head or section (see Fig. UG-33.1)
L_e = equivalent length of conical section
= $(L/2)(1 + D_s/D_L)$
L = axial length of cone or conical section (see Fig. UG-33.1) [for a toriconical head or section, see UG-33(g)].
D_s = outside diameter at small end of conical section under consideration
D_L = outside diameter at large end of conical section under consideration
h_o = one-half of the length of the outside minor axis of the ellipsoidal head, or the outside height of the ellipsoidal head measured from the tangent line (head-bend line)
K_o = factor depending on the ellipsoidal head proportions $D_o/2h_o$ (see Table UG-33.1)
R_o = for hemispherical heads, the outside radius
R_o = for ellipsoidal heads, the equivalent outside spherical radius taken as K_oD_o
R_o = for torispherical heads, the outside radius of the crown portion of the head
t = minimum required thickness of head after forming, in. (mm)
α = one-half the apex angle in conical heads and sections, deg.

(c) Hemispherical Heads. The required thickness of a hemispherical head having pressure on the convex side shall be determined in the same manner as outlined in UG-28(d) for determining the thickness for a spherical shell. An example illustrating the use of this procedure is given in L-6.3.

(d) Ellipsoidal Heads. The required thickness of an ellipsoidal head having pressure on the convex side, either seamless or of built-up construction with butt joints, shall not be less than that determined by the following procedure.

Step 1. Assume a value for t and calculate the value of factor A using the following formula:

$$A = \frac{0.125}{R_o/t}$$

Step 2. Using the value of A calculated in Step 1, follow the same procedure as that given for spherical shells in UG-28(d), Steps 2 through 6. An example illustrating the use of this procedure is given in L-6.1.

(e) Torispherical Heads. The required thickness of a torispherical head having pressure on the convex side, either seamless or of built-up construction with butt joints, shall not be less than that determined by the same design procedure as is used for ellipsoidal heads given in (d) above, using the appropriate value for R_o. An example illustrating the use of this procedure is given in L-6.2.

(f) Conical Heads and Sections. The required thickness of a conical head or section under pressure on the convex side, either seamless or of built-up construction with butt joints, shall be determined in accordance with the following subparagraphs.

(1) When α is equal to or less than 60 deg.:

(a) cones having D_L/t_e values ≥ 10:

Step 1. Assume a value for t_e and determine the ratios L_e/D_L and D_L/t_e.

Step 2. Enter Fig. G of Subpart 3 of Section II, Part D at a value of L/D_o equivalent to the value of L_e/D_L determined in Step 1. For values of L_e/D_L greater than 50, enter the chart at a value of $L_e/D_L = 50$.

Step 3. Move horizontally to the line for the value of D_o/t equivalent to the value of D_L/t_e determined in Step 1. Interpolation may be made for intermediate values of D_L/t_e. From this point of intersection move vertically downwards to determine the value of factor A.

Step 4. Using the value of A calculated in Step 3, enter the applicable material chart in Subpart 3 of Section II, Part D for the material under consideration. Move vertically to an intersection with the material/temperature line for the design temperature (see UG-20). Interpolation may be made between lines for intermediate temperatures.

In cases where the value of A falls to the right of the end of the material/temperature line, assume an intersection with the horizontal projection of the upper end of the material/temperature line. For values of A falling to the left of the material/temperature line, see Step 7.

Step 5. From the intersection obtained in Step 4, move horizontally to the right and read the value of factor B.

Step 6. Using this value of B, calculate the value of the maximum allowable external working pressure P_a using the following formula:

$$P_a = \frac{4B}{3(D_L/t_e)}$$

where the flange thickness is not less than two times the shell thickness, the corner radius on the inside is not less than three times the flange thickness, and the welding meets all the requirements for circumferential joints given in Part UW.

Sketch (b-2). $C = 0.33m$ but not less than 0.20 for forged circular and noncircular heads integral with or butt welded to the vessel, where the flange thickness is not less than the shell thickness, the corner radius on the inside is not less than the following:

r_{min} = 0.375 in. (10 mm) for $t_s \le 1\frac{1}{2}$ in. (38 mm)

$r_{min} = 0.25t_s$ for $t_s > 1\frac{1}{2}$ in. (38 mm) but need not be greater than $\frac{3}{4}$ in. (19 mm)

The welding shall meet all the requirements for circumferential joints given in Part UW.

Sketch (c). $C = 0.13$ for circular heads lap welded or brazed to the shell with corner radius not less than $3t$ and Y not less than required by Formula (6) and the requirements of UW-13 are met.

$C = 0.20$ for circular and noncircular lap welded or brazed construction as above, but with no special requirement with regard to Y.

$C = 0.30$ for circular flanged plates screwed over the end of the vessel, with inside corner radius not less than $3t$, in which the design of the threaded joint against failure by shear, tension, or compression, resulting from the end force due to pressure, is based on a factor of safety of at least four, and the threaded parts are at least as strong as the threads for standard piping of the same diameter. Seal welding may be used, if desired.

Sketch (d). $C = 0.13$ for integral flat circular heads when the dimension d does not exceed 24 in. (600 mm), the ratio of thickness of the head to the dimension d is not less than 0.05 or greater than 0.25, the head thickness t_h is not less than the shell thickness t_s, the inside corner radius is not less than $0.25t$, and the construction is obtained by special techniques of upsetting and spinning the end of the shell, such as employed in closing header ends.

Sketches (e), (f), and (g). $C = 0.33m$ but not less than 0.20 for circular plates, welded to the inside of a vessel, and otherwise meeting the requirements for the respective types of welded vessels. If a value of m less than 1 is used in calculating t, the shell thickness t_s shall be maintained along a distance inwardly from the inside face of the head equal to at least $2\sqrt{dt_s}$. The throat thickness of the fillet welds in sketches (e) and (f) shall be at least $0.7t_s$. The size of the weld t_w in sketch (g) shall be not less than 2 times the required thickness of a seamless shell nor less than 1.25 times the nominal shell thickness but need not be greater than the head thickness; the weld shall be deposited in a welding groove with the root of the weld at the inner face of the head as shown in the sketch.

$C = 0.33$ for noncircular plates, welded to the inside of a vessel and otherwise meeting the requirements for the respective types of welded vessels. The throat thickness of the fillet welds in sketches (e) and (f) shall be at least $0.7t_s$. The size of the weld t_w in sketch (g) shall be not less than 2 times the required thickness of a seamless shell nor less than 1.25 times the nominal shell thickness but need not be greater than the head thickness; the weld shall be deposited in a welding groove with the root of the weld at the inner face of the head as shown in the sketch.

Sketch (h). $C = 0.33$ for circular plates welded to the end of the shell when t_s is at least $1.25t_r$ and the weld details conform to the requirements of UW-13(e) and Fig. UW-13.2 sketches (a) to (g) inclusive. See also UG-93(d)(3).

Sketch (i). $C = 0.33m$ but not less than 0.20 for circular plates if an inside fillet weld with minimum throat thickness of $0.7t_s$ is used and the details of the outside weld conform to the requirements of UW-13(e) and Fig. UW-13.2 sketches (a) to (g) inclusive, in which the inside weld can be considered to contribute an amount equal to t_s to the sum of the dimensions a and b. See also UG-93(d)(3).

Sketches (j) and (k). $C = 0.3$ for circular and noncircular heads and covers bolted to the vessel as indicated in the figures. Note that Formula (2) or (5) shall be used because of the extra moment applied to the cover by the bolting.

When the cover plate is grooved for a peripheral gasket, as shown in sketch (k), the net cover plate thickness under the groove or between the groove and the outer edge of the cover plate shall be not less than

$$d\sqrt{1.9Wh_G/Sd^3}$$

for circular heads and covers, nor less than

$$d\sqrt{6Wh_G/SLd^2}$$

for noncircular heads and covers.

Sketches (m), (n), and (o). $C = 0.3$ for a circular plate inserted into the end of a vessel and held in place by a positive mechanical locking arrangement, and when all possible means of failure (either by shear, tension, compression, or radial deformation, including flaring, resulting from pressure and differential thermal expansion) are resisted with a factor of safety of at least four. Seal welding may be used, if desired.

Sketch (p). $C = 0.25$ for circular and noncircular covers bolted with a full-face gasket, to shells, flanges or side plates.

Sketch (q). $C = 0.75$ for circular plates screwed into the end of a vessel having an inside diameter d not exceeding 12 in. (300 mm); or for heads having an integral flange screwed over the end of a vessel having an inside diameter d not exceeding 12 in. (300 mm); and when the design of the threaded joint, against failure by shear, tension, compression, or radial deformation, including flaring, resulting from pressure and differential thermal expansion, is based on a factor of safety of at least four. If a tapered pipe thread is used, the requirements of Table UG-43 shall also be met. Seal welding may be used, if desired.

Sketch (r). $C = 0.33$ for circular plates having a dimension d not exceeding 18 in. (450 mm) inserted into the vessel as shown and otherwise meeting the requirements for the respective types of welded vessels. The end of the vessel shall be crimped over at least 30 deg., but not more than 45 deg. The crimping may be done cold only when this operation will not injure the metal. The throat of the weld shall be not less than the thickness of the flat head or shell, whichever is greater.

Sketch (s). $C = 0.33$ for circular beveled plates having a diameter d not exceeding 18 in. (450 mm), inserted into a vessel, the end of which is crimped over at least 30 deg., but not more than 45 deg., and when the undercutting for seating leaves at least 80% of the shell thickness. The beveling shall be not less than 75% of the head thickness. The crimping shall be done when the entire circumference of the cylinder is uniformly heated to the proper forging temperature for the material used. For this construction, the ratio t_s/d shall be not less than the ratio P/S nor less than 0.05. The maximum allowable pressure for this construction shall not exceed $P = S/5d$ for Customary units ($P = 127S/d$ for SI units).

This construction is not permissible if machined from rolled plate.

UG-35 OTHER TYPES OF CLOSURES

A05 **UG-35.1 Dished Covers**

Requirements for design of dished heads with bolting flanges are given in 1-6.

04 **UG-35.2 Quick-Actuating (Quick-Opening) Closures**

UG-35.2(a) Definitions

UG-35.2(a)(1) Quick-actuating or quick-opening closures are those that permit substantially faster access to the contents space of a pressure vessel than would be expected with a standard bolted flange connection (bolting through one or both flanges). Closures with swing bolts are not considered quick-actuating (quick-opening).

UG-35.2(a)(2) Holding elements are parts of the closure used to hold the cover to the vessel, and/or to provide the load required to seal the closure. Hinge pins or bolts can be holding elements.

UG-35.2(a)(3) Locking components are parts of the closure that prevent a reduction in the load on a holding element that provides the force required to seal the closure, or prevent the release of a holding element. Locking components may also be used as holding elements.

UG-35.2(a)(4) The locking mechanism or locking device may consist of a combination of locking components.

UG-35.2(a)(5) The use of a multi-link component, such as a chain, as a holding element is not permitted.

UG-35.2(b) General Design Requirements

UG-35.2(b)(1) Quick-actuating closures shall be designed such that the locking elements will be engaged prior to or upon application of pressure and will not disengage until the pressure is released.

UG-35.2(b)(2) Quick-actuating closures shall be designed such that the failure of a single locking component while the vessel is pressurized (or contains a static head of liquid acting at the closure) will not:

(a) cause or allow the closure to be opened or leak; or

(b) result in the failure of any other locking component or holding element; or

(c) increase the stress in any other locking component or holding element by more than 50% above the allowable stress of the component.

UG-35.2(b)(3) Quick-actuating closures shall be designed and installed such that it may be determined by visual external observation that the holding elements are in satisfactory condition.

UG-35.2(b)(4) Quick-actuating closures shall also be designed so that all locking components can be verified to be fully engaged by visual observation or other means prior to the application of pressure to the vessel.

UG-35.2(b)(5) When installed, all vessels having quick-actuating closures shall be provided with a pressure indicating device visible from the operating area and suitable to detect pressure at the closure.

UG-35.2(c) Specific Design Requirements

UG-35.2(c)(1) Quick-actuating closures that are held in position by positive locking devices and that are fully released by partial rotation or limited movement of the closure itself or the locking mechanism, and any closure that is other than manually operated, shall be so

F shall be 1.0 in all external pressure reinforcement calculations.

(2) The reinforcement required for openings in each shell of a multiple-walled vessel shall comply with (1) above when the shell is subject to external pressure, and with (c) above when the shell is subject to internal pressure, regardless of whether or not there is a common nozzle secured to more than one shell by strength welds.

(e) Design for Alternate Internal and External Pressure. Reinforcement of vessels subject to alternate internal and external pressures shall meet the requirements of (c) above for internal pressure and of (d) above for external pressure.

(f) Details and formulas for required area and available area are given in Fig. UG-37.1.

A05 *(g)* Reinforcing plates and saddles of nozzles attached to the outside of a vessel shall be provided with at least one telltale hole [maximum size NPS $\frac{1}{4}$ (DN 8) tap] that may be tapped for a preliminary compressed air and soapsuds test for tightness of welds that seal off the inside of the vessel. These telltale holes may be left open or may be plugged when the vessel is in service. If the holes are plugged, the plugging material used shall not be capable of sustaining pressure between the reinforcing plate and the vessel wall.

UG-38 FLUED OPENINGS IN SHELLS AND FORMED HEADS

(a) Flued openings in shells and formed heads made by inward or outward forming of the head plate shall meet the requirements for reinforcement in UG-37. The thickness of the flued flange shall also meet the requirements of UG-27 and/or UG-28, as applicable, where L as used in UG-28 is the minimum depth of flange as shown in Fig. UG-38. The minimum thickness of the flued flange on a vessel subject to both internal and external pressure shall be the larger of the two thicknesses as determined above.

(b) The minimum depth of flange of a flued in opening exceeding 6 in. (150 mm) in any inside dimension, when not stayed by an attached pipe or flue, shall equal $3t_r$ or (t_r + 3 in.) (for SI units, t_r + 75 mm), whichever is less, where t_r is the required shell or head thickness. The depth of flange shall be determined by placing a straight edge across the side opposite the flued opening along the major axis and measuring from the straightedge to the edge of the flanged opening (see Fig. UG-38).

(c) There is no minimum depth of flange requirement for flued out openings.

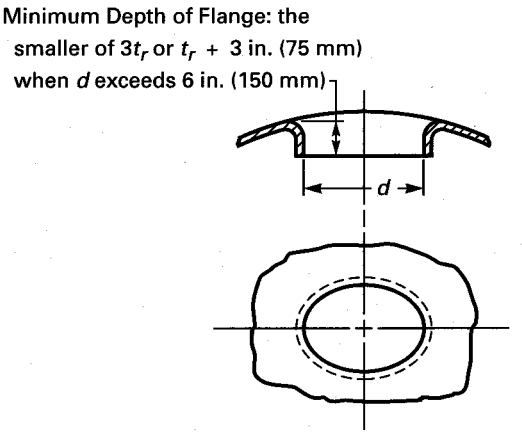

FIG. UG-38 MINIMUM DEPTH FOR FLANGE OF FLUED IN OPENINGS

(d) The minimum width of bearing surface for a gasket on a self-sealing flued opening shall be in accordance with UG-46(j).

UG-39 REINFORCEMENT REQUIRED FOR OPENINGS IN FLAT HEADS

UG-39(a) General. The rules in this paragraph apply to all openings in flat heads except opening(s) which do not exceed the size and spacing limits in UG-36(c)(3) and do not exceed one-fourth the head diameter or shortest span.

UG-39(b) Single and multiple openings in flat heads that have diameters equal to or less than one-half the head diameter may be reinforced as follows.

UG-39(b)(1) Flat heads that have a single opening with a diameter that does not exceed one-half the head diameter or shortest span, as defined in UG-34, shall have a total cross-sectional area of reinforcement for all planes through the center of the opening not less than that given by the formula

$$A = 0.5dt + tt_n\,(1 - f_{r1})$$

where d, t_n, and f_{r1} are defined in UG-37 and t in UG-34.

UG-39(b)(2) Multiple openings none of which have diameters exceeding one-half the head diameter and no pair having an average diameter greater than one-quarter the head diameter may be reinforced individually as required by (1) above when the spacing between any pair of adjacent openings is equal to or greater than twice the average diameter of the pair.

When spacing between adjacent openings is less than twice but equal to or more than $1\frac{1}{4}$ the average diameter of the pair, the required reinforcement for each opening in the pair, as determined by (1) above, shall be summed together and then distributed such that 50% of the sum is located between the two openings. Spacings of less than $1\frac{1}{4}$ the average diameter of adjacent openings shall be treated by rules of U-2(g).

UG-39(b)(3) In no case shall the width of ligament between two adjacent openings be less than one-quarter the diameter of the smaller of the two openings in the pair. The width of ligament between the edge of any

one opening and the edge of the flat head (such as U_3 or U_5 in Fig. UG-39) shall not be less than one-quarter the diameter of that one opening.

UG-39(c) Flat heads which have an opening with a diameter that exceeds one-half the head diameter or shortest span, as defined in UG-34, shall be designed as follows.

UG-39(c)(1) When the opening is a single, circular centrally located opening in a circular flat head, the head shall be designed according to Appendix 14 and related factors in Appendix 2. The head-to-shell junction may be integral, as shown in Fig. UG-34 sketches (a), (b-1), (b-2), (d), and (g). The head may also be attached by a butt weld or a full-penetration corner weld similar to the joints shown in Fig. UW-13.2 sketches (a), (b), (c), (d), (e), or (f). The large centrally located opening may have a nozzle which is integrally formed or integrally attached by a full penetration weld or may be plain without an attached nozzle or hub. The head thickness does not have to be calculated by UG-34 rules. The thickness that satisfies all the requirements of Appendix 14 meets the requirements of the Code.

UG-39(c)(2) Opening(s) may be located in the rim space surrounding the central opening. See Fig. UG-39. Such openings may be reinforced by area replacement in accordance with the formula in (b)(1) above using as a required head thickness the thickness that satisfies rules of Appendix 14. Multiple rim openings shall meet spacing rules of (b)(2) and (b)(3) above. Alternatively, the head thickness that meets the rules of Appendix 14 may be increased by multiplying it by the square root of two (1.414) if only a single opening is placed in the rim space or if spacing p between two such openings is twice or more than their average diameter. For spacing less than twice their average diameter, the thickness that satisfies Appendix 14 shall be divided by the square root of efficiency factor e, where e is defined in (e)(2) below.

The rim opening(s) shall not be larger in diameter than one-quarter the differences in head diameter less central opening diameter. The minimum ligament width U shall not be less than one-quarter the diameter of the smaller of the two openings in the pair. A minimum ligament width of one-quarter the diameter of the rim opening applies to ligaments designated as U_2, U_4, U_3, and U_5 in Fig. UG-39.

UG-39(c)(3) When the large opening is any other type than that described in (c)(1) above, there are no specific rules given. Consequently, the requirements of U-2(g) shall be met.

UG-39(d) As an alternative to (b)(1) above, the thickness of flat heads and covers with a single opening with a diameter that does not exceed one-half the head diameter may be increased to provide the necessary reinforcement as follows.

UG-39(d)(1) In Formula (1) or (3) of UG-34(c), use $2C$ or 0.75 in place of C, whichever is the lesser; except that, for sketches (b-1), (b-2), (e), (f), (g), and (i) of Fig. UG-34, use $2C$ or 0.50, whichever is the lesser.

UG-39(d)(2) In Formula (2) or (5) of UG-34(c), double the quantity under the square root sign.

UG-39(e) Multiple openings none of which have diameters exceeding one-half the head diameter and no pair having an average diameter greater than one-quarter the head diameter may be reinforced as follows.

UG-39(e)(1) When the spacing between a pair of adjacent openings is equal to or greater than twice the average diameter of the pair, and this is so for all opening pairs, the head thickness may be determined by rules in (d) above.

UG-39(e)(2) When the spacing between adjacent openings in a pair is less than twice but equal to or greater than $1\frac{1}{4}$ the average diameter of the pair, the required head thickness shall be that determined by (d) above multiplied by a factor h, where

$$h = \sqrt{0.5/e}$$

$$e = [(p - d_{ave})/p]_{smallest}$$

where

e = smallest ligament efficiency of adjacent opening pairs in the head
p = center-to-center spacing of two adjacent openings
d_{ave} = average diameter of the same two adjacent openings

UG-39(e)(3) Spacings of less than $1\frac{1}{4}$ the average diameter of adjacent openings shall be treated by rules of U-2(g).

UG-39(e)(4) In no case shall the width of ligament between two adjacent openings be less than one-quarter the diameter of the smaller of the two openings in the pair.

UG-39(e)(5) The width of ligament between the edge of any one opening and the edge of the flat head (such as U_3 or U_5 in Fig. UG-39) shall not be less than one-quarter the diameter of that one opening.

UG-40 LIMITS OF REINFORCEMENT

(a) The boundaries of the cross sectional area in any plane normal to the vessel wall and passing through the center of the opening within which metal must be located in order to have value as reinforcement are designated as

UG-44(h) ASME B16.47, Large Diameter Steel Flanges, NPS 26 Through NPS 60

A05 *UG-44(i)* A forged nozzle flange may use the ASME B16.5/B16.47 pressure–temperature ratings for the flange material being used, provided all of the following are met.

UG-44(i)(1) For ASME B16.5 applications, the forged nozzle flange shall meet all dimensional requirements of a flanged fitting given in ASME B16.5 with the exception of the inside diameter. The inside diameter of the forged nozzle flange shall not exceed the inside diameter of the same size lap joint flange given in ASME B16.5. For ASME B16.47 applications, the inside diameter shall not exceed the weld hub diameter *A* given in the ASME B16.47 tables.

UG-44(i)(2) For ASME B16.5 applications, the outside diameter of the forged nozzle neck shall be at least equal to the hub diameter of the same size and class ASME B16.5 lap joint flange. For ASME B16.47 applications, the outside diameter of the hub shall at least equal the *X* diameter given in the ASME B16.47 tables. Larger hub diameters shall be limited to nut stop diameter dimensions. See Fig. 2-4 sketches (12) and (12a).

UG-45 NOZZLE NECK THICKNESS

The minimum wall thickness of nozzle necks shall be the larger of (a) or (b) below. Shear stresses caused by UG-22 loadings shall not exceed the allowable shear stress in (c) below. For applications of rules in this paragraph refer to Appendix L, Examples 2, 5, and 8 (see L-7.2, L-7.5, and L-7.8, respectively).

UG-45(a) The minimum wall thickness of a nozzle neck or other connection (including access openings and openings for inspection) shall not be less than the thickness computed from the applicable loadings in UG-22 plus the thickness added for allowances for corrosion and threading, as applicable [see UG-31(c)(2)], on the connection.

UG-45(b) Additionally, the minimum thickness of a nozzle neck or other connection (except for access openings and openings for inspection only) shall not be less than the smaller of the nozzle wall thickness as determined by the applicable rule in (b)(1), (b)(2) or (b)(3) below, and the wall thickness as determined by (b)(4) below:

UG-45(b)(1) for vessels under internal pressure only, the thickness (plus corrosion allowance) required for pressure (assuming $E = 1.0$) for the shell or head at the location where the nozzle neck or other connection attaches to the vessel but in no case less than the minimum thickness specified for the material in UG-16(b);

UG-45(b)(2) for vessels under external pressure only, the thickness (plus corrosion allowance) obtained by using the external design pressure as an equivalent internal design pressure (assuming $E = 1.0$) in the formula for the shell or head at the location where the nozzle neck or other connection attaches to the vessel but in no case less than the minimum thickness specified for the material in UG-16(b);

UG-45(b)(3) for vessels designed for both internal and external pressure, the greater of the thicknesses determined by (b)(1) or (b)(2) above;

UG-45(b)(4) the minimum thickness[25] of standard wall pipe plus the thickness added for corrosion allowance on the connection; for nozzles larger than the largest pipe size included in ANSI/ASME B36.10M, the wall thickness of that largest size plus the thickness added for corrosion allowance on the connection.

UG-45(c) The allowable stress value for shear in the nozzle neck shall be 70% of the allowable tensile stress for the nozzle material.

UG-46 INSPECTION OPENINGS[26]

(a) All pressure vessels for use with compressed air and those subject to internal corrosion or having parts subject to erosion or mechanical abrasion (see UG-25), except as permitted otherwise in this paragraph, shall be provided with suitable manhole, handhole, or other inspection openings for examination and cleaning.

Compressed air as used in this paragraph is not intended to include air which has had moisture removed to provide an atmospheric dew point of –50°F (–46°C) or less.

Inspection openings may be omitted in vessels covered in UG-46(b), and in the shell side of fixed tubesheet heat exchangers. When inspection openings are not provided, the Manufacturer's Data Report shall include one of the following notations under remarks:

(1) "UG-46(b)" when telltale holes are used in lieu of inspection openings;

(2) "UG-46(a)" when inspection openings are omitted in fixed tubesheet heat exchangers;

(3) "UG-46(c)," "UG-46(d)," or "UG-46(e)" when provision for inspection is made in accordance with one of these paragraphs;

(4) the statement "for noncorrosive service."

[25] The minimum thickness for all materials is that wall thickness listed in Table 2 of ANSI/ASME B36.10M, less 12½%. For diameters other than those listed as standard (STD) in the Table, this shall be based upon the next larger pipe size. When a material specification does not specify schedule weights conforming to ANSI/ASME B36.10M, the pipe weight indicated as regular shall be used when so designated in the specification. If not so designated, the heaviest schedule listed shall be used even though this is less than the thickness of standard weight pipe of ANSI/ASME B36.10M.

[26] All dimensions given, for size of vessel on which inspection openings are required, are nominal.

(b) When provided with tell-tale holes complying with the provisions of UG-25, inspection openings as required in (a) above may be omitted in vessels not over 36 in. (900 mm). I.D. which are subject only to corrosion, provided that the holes are spaced one hole per 10 sq ft (0.9 m^2) (or fraction thereof) of internal vessel surface area where corrosion is expected with a minimum of four uniformly spaced holes per vessel. This provision does not apply to vessels for compressed air.

(c) Vessels over 12 in. (300 mm) I.D. under air pressure which also contain, as an inherent requirement of their operation, other substances which will prevent corrosion need not have openings for inspection only, provided the vessel contains suitable openings through which inspection can be made conveniently, and provided such openings are equivalent in size and number to the requirements for inspection openings in (f) below.

(d) For vessels 12 in. (300 mm) or less in inside diameter, openings for inspection only may be omitted if there are at least two removable pipe connections not less than NPS $^3/_4$ (DN 20).

(e) Vessels less than 16 in. (400 mm) and over 12 in. (300 mm) I.D. shall have at least two handholes or two threaded pipe plug inspection openings of not less than NPS $1^1/_2$ (DN 40) except as permitted by the following: when vessels less than 16 in. (400 mm) and over 12 in. (300 mm) I.D. are to be installed so that inspection cannot be made without removing the vessel from the assembly, openings for inspection only may be omitted provided there are at least two removable pipe connections of not less than NPS $1^1/_2$ (DN 40).

(f) Vessels that require access or inspection openings shall be equipped as follows.[27]

(1) All vessels less than 18 in. (450 mm) and over 12 in. (300 mm) I.D. shall have at least two handholes or two plugged, threaded inspection openings of not less than NPS $1^1/_2$ (DN 40).

(2) All vessels 18 in. (450 mm) to 36 in. (900 mm), inclusive, I.D. shall have a manhole or at least two handholes or two plugged, threaded inspection openings of not less than NPS 2 (DN 50).

(3) All vessels over 36 in. (900 mm) I.D. shall have a manhole, except that those whose shape or use makes one impracticable shall have at least two handholes 4 in. × 6 in. (100 mm × 150 mm) or two equal openings of equivalent area.

(4) When handholes or pipe plug openings are permitted for inspection openings in place of a manhole, one handhole or one pipe plug opening shall be in each head or in the shell near each head.

(5) Openings with removable heads or cover plates intended for other purposes may be used in place of the required inspection openings provided they are equal at least to the size of the required inspection openings.

(6) A single opening with removable head or cover plate may be used in place of all the smaller inspection openings provided it is of such size and location as to afford at least an equal view of the interior.

(7) Flanged and/or threaded connections from which piping, instruments, or similar attachments can be removed may be used in place of the required inspection openings provided that:

(a) the connections are at least equal to the size of the required openings; and

(b) the connections are sized and located to afford at least an equal view of the interior as the required inspection openings.

(g) When inspection or access openings are required, they shall comply at least with the following requirements.

(1) An elliptical or obround manhole shall be not less than 12 in. × 16 in. (300 mm × 400 mm). A circular manhole shall be not less than 16 in. (400 mm) I.D.

(2) A handhole opening shall be not less than 2 in. × 3 in. (50 mm × 75 mm), but should be as large as is consistent with the size of the vessel and the location of the opening.

(h) All access and inspection openings in a shell or unstayed head shall be designed in accordance with the rules of this Division for openings.

(i) When a threaded opening is to be used for inspection or cleaning purposes, the closing plug or cap shall be of a material suitable for the pressure and no material shall be used at a temperature exceeding the maximum temperature allowed in this Division for that material. The thread shall be a standard taper pipe thread except that a straight thread of at least equal strength may be used if other sealing means to prevent leakage are provided.

(j) Manholes of the type in which the internal pressure forces the cover plate against a flat gasket shall have a minimum gasket bearing width of $^{11}/_{16}$ in. (17 mm).

BRACED AND STAYED SURFACES

UG-47 BRACED AND STAYED SURFACES

(a) The minimum thickness and maximum allowable working pressure for braced and stayed flat plates and those parts which, by these rules, require staying as flat plates with braces or staybolts of uniform diameter symmetrically spaced, shall be calculated by the following formulas:

$$t = p\sqrt{\frac{P}{SC}} \quad (1)$$

$$P = \frac{t^2 SC}{p^2} \quad (2)$$

where

t = minimum thickness of plate
P = internal design pressure (see UG-21)
S = maximum allowable stress value in tension (see UG-23)
p = maximum pitch. The maximum pitch is the greatest distance between any set of parallel straight

[27] Dimensions referred to are nominal.

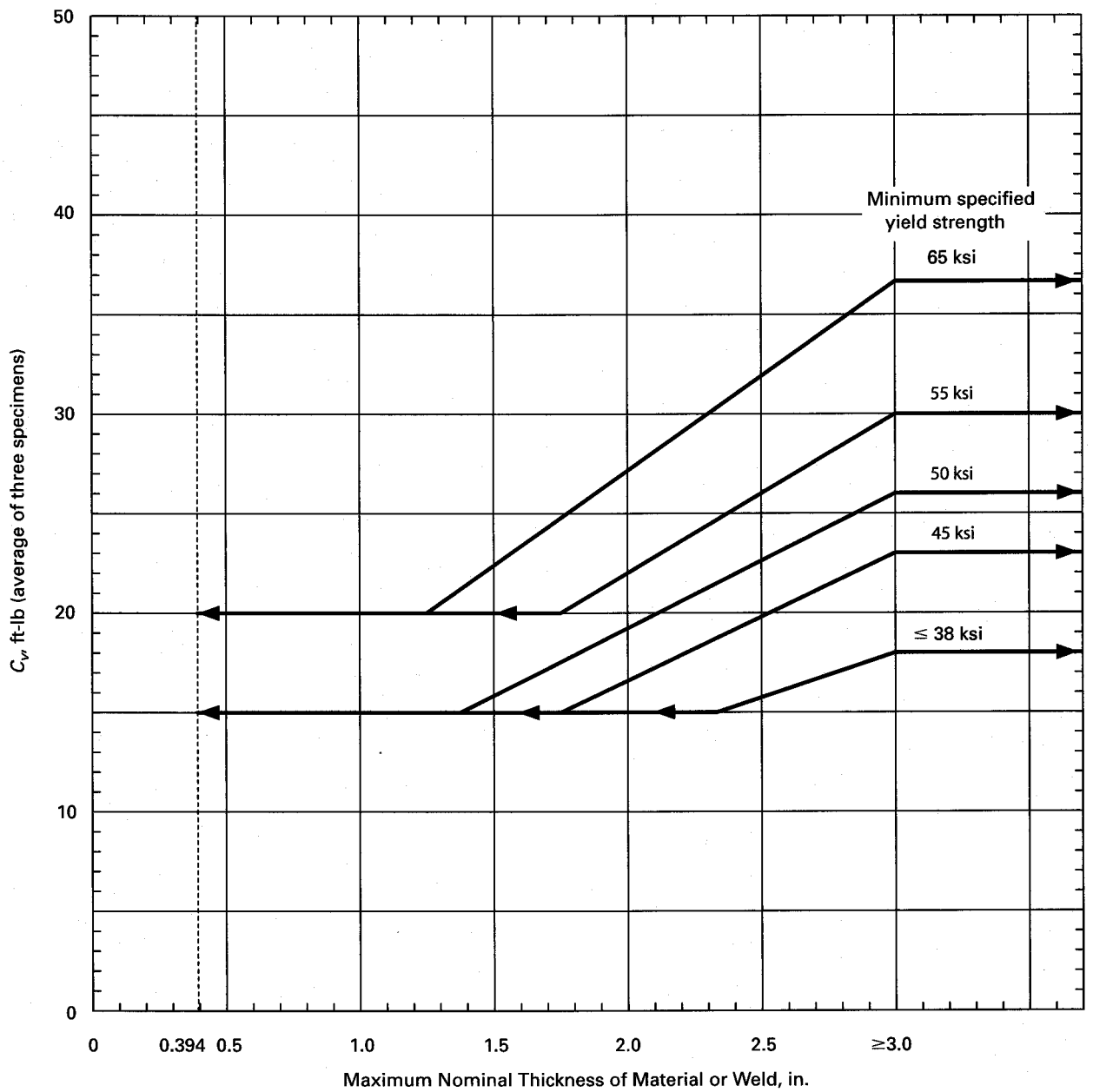

GENERAL NOTES:

(a) Interpolation between yield strengths shown is permitted.

(b) The minimum impact energy for one specimen shall not be less than $^2/_3$ of the average energy required for three specimens. The average impact energy value of the three specimens may be rounded to the nearest ft-lb.

(c) Material produced and impact tested in accordance with SA-320, SA-333, SA-334, SA-350, SA-352, SA-420, impact tested SA/AS 1548 (*L* impact designations), SA-437, SA-540 (except for materials produced under Table 2, Note 4 in SA-540), and SA-765 do not have to satisfy these energy values. They are acceptable for use at minimum design metal temperature not colder than the test temperature when the energy values required by the applicable specification are satisfied.

(d) For materials having a specified minimum tensile strength of 95 ksi or more, see UG-84(c)(4)(b).

FIG. UG-84.1 CHARPY V-NOTCH IMPACT TEST REQUIREMENTS FOR FULL SIZE SPECIMENS FOR CARBON AND LOW ALLOY STEELS, HAVING A SPECIFIED MINIMUM TENSILE STRENGTH OF LESS THAN 95 ksi, LISTED IN TABLE UCS-23 **A05**

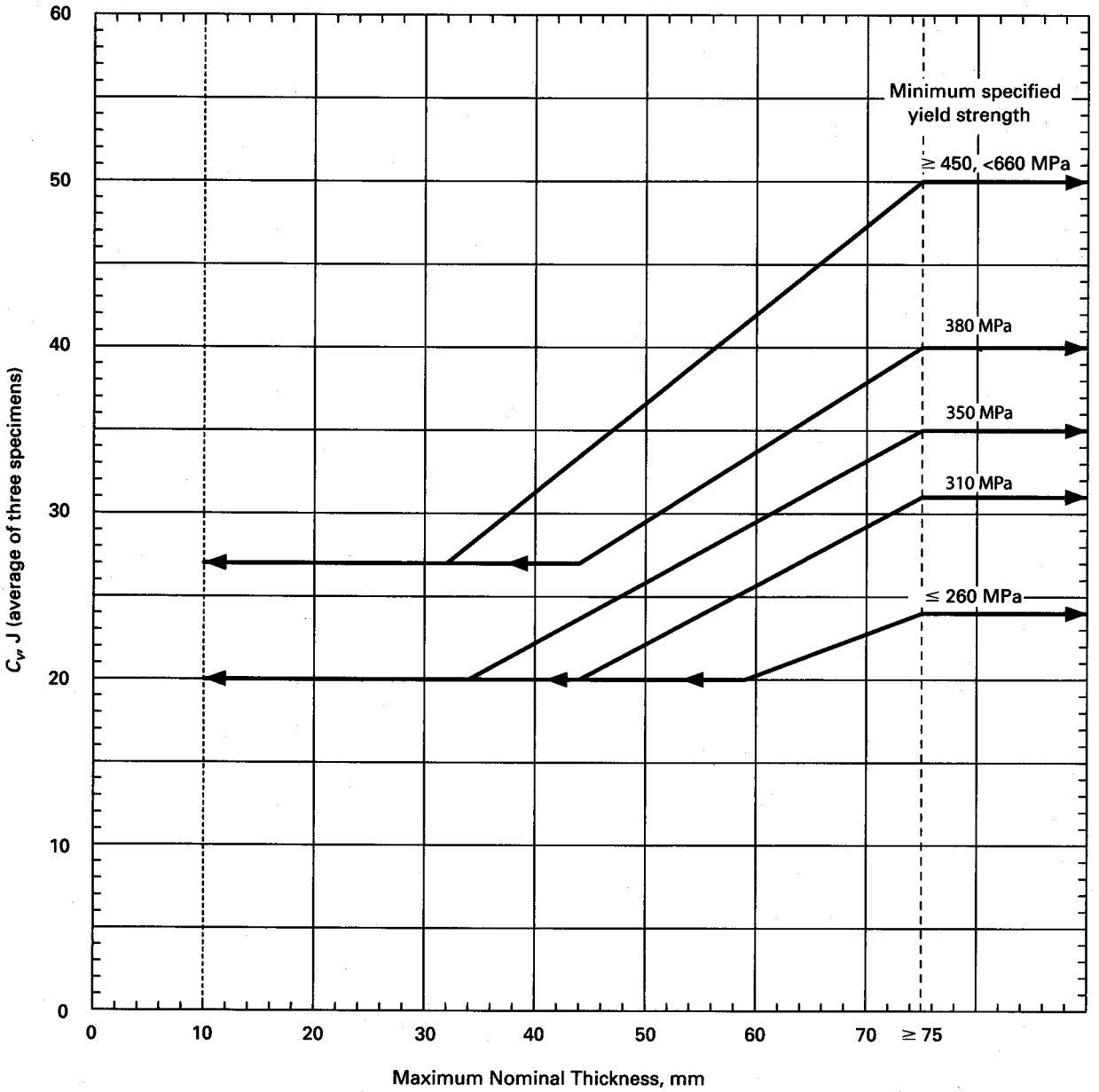

GENERAL NOTES:

(a) Interpolation between yield strengths shown is permitted.

(b) The minimum impact energy for one specimen shall not be less than ⅔ of the average energy required for three specimens. The average impact energy value of the three specimens may be rounded to the nearest J.

(c) Material produced and impact tested in accordance with SA-320, SA-333, SA-334, SA-350, SA-352, SA-420, impact tested SA/AS 1548 (*L* impact designations), SA-437, SA-540 (except for materials produced under Table 2, Note 4 in SA-540), and SA-765 do not have to satisfy these energy values. They are acceptable for use at minimum design metal temperature not colder than the test temperature when the energy values required by the applicable specification are satisfied.

(d) For materials having a specified minimum tensile strength of 655 MPa or more, see UG-84(c)(4)(b).

A05 FIG. UG-84.1M CHARPY V-NOTCH IMPACT TEST REQUIREMENTS FOR FULL SIZE SPECIMENS FOR CARBON AND LOW ALLOY STEELS, HAVING A SPECIFIED MINIMUM TENSILE STRENGTH OF LESS THAN 655 MPa, LISTED IN TABLE UCS-23

(k) Vessels, except for those in lethal service, may be painted or otherwise coated either internally or externally, and may be lined internally, prior to the pressure test. However, the user is cautioned that such painting/coating/lining may mask leaks that would otherwise have been detected during the pressure test.

UG-100 PNEUMATIC TEST[34] (SEE UW-50)

(a) Subject to the provisions of UG-99(a)(1) and (a)(2), a pneumatic test prescribed in this paragraph may be used in lieu of the standard hydrostatic test prescribed in UG-99 for vessels:

(1) that are so designed and/or supported that they cannot safely be filled with water;

(2) not readily dried, that are to be used in services where traces of the testing liquid cannot be tolerated and the parts of which have, where possible, been previously tested by hydrostatic pressure to the pressure required in UG-99.

(b) Except for enameled vessels, for which the pneumatic test pressure shall be at least equal to, but need not exceed, the maximum allowable working pressure to be marked on the vessel, the pneumatic test pressure shall be at least equal to 1.1 times the maximum allowable working pressure to be stamped on the vessel multiplied by the lowest ratio (for the materials of which the vessel is constructed) of the stress value S for the test temperature of the vessel to the stress value S for the design temperature (see UG-21). In no case shall the pneumatic test pressure exceed 1.1 times the basis for calculated test pressure as defined in 3-2.

(c) The metal temperature during pneumatic test shall be maintained at least 30°F (17°C) above the minimum design metal temperature to minimize the risk of brittle fracture. [See UG-20 and General Note (6) to Fig. UCS-66.2.]

(d) The pressure in the vessel shall be gradually increased to not more than one-half of the test pressure. Thereafter, the test pressure shall be increased in steps of approximately one-tenth of the test pressure until the required test pressure has been reached. Then the pressure shall be reduced to a value equal to the test pressure divided by 1.1 and held for a sufficient time to permit inspection of the vessel. Except for leakage that might occur at temporary test closures for those openings intended for welded connections, leakage is not allowed at the time of the required visual inspection. Leakage from temporary seals shall be directed away so as to avoid masking leaks from other joints.

The visual inspection of the vessel at the required test pressure divided by 1.1 may be waived provided:

(1) a suitable gas leak test is applied;

(2) substitution of the gas leak test is by agreement reached between Manufacturer and Inspector;

(3) all welded seams which will be hidden by assembly be given a visual examination for workmanship prior to assembly;

(4) the vessel will not contain a "lethal" substance.

(e) Vessels, except for those in lethal service, may be painted or otherwise coated either internally or externally, and may be lined internally, prior to the pressure test. However, the user is cautioned that such painting/coating/lining may mask leaks that would otherwise have been detected during the pressure test.

UG-101 PROOF TESTS TO ESTABLISH MAXIMUM ALLOWABLE WORKING PRESSURE

UG-101(a) General

UG-101(a)(1) The maximum allowable working pressure for vessels or vessel parts for which the strength cannot be computed with a satisfactory assurance of accuracy (see U-2) shall be established in accordance with the requirements of this paragraph, using one of the test procedures applicable to the type of loading and to the material used in construction.

UG-101(a)(2) Provision is made in these rules for two types of tests to determine the internal maximum allowable working pressure:

(a) tests based on yielding of the part to be tested. These tests are limited to materials with a ratio of minimum specified yield to minimum specified ultimate strength of 0.625 or less.

(b) tests based on bursting of the part.

UG-101(a)(3) Safety of testing personnel should be given serious consideration when conducting proof tests, and particular care should be taken during bursting tests in (m) below.

UG-101(a)(4) The Code recognizes that Manufacturers may maintain control of proof test reports under different ownerships than existed during the original application of the proof test. When a Manufacturer is A05

[34] In some cases it is desirable to test vessels when partly filled with liquids. For such vessels a combined hydrostatic and pneumatic test may be used as an alternative to the pneumatic test of this paragraph, provided the liquid level is set so that the maximum stress including the stress produced by pneumatic pressure at any point in the vessel (usually near the bottom) or in the support attachments, does not exceed 1.3 times the allowable stress value of the material multiplied by the applicable joint efficiency. After setting the liquid level to meet this condition, the test is conducted as prescribed in (b) and (c) above.

Air or gas is hazardous when used as a testing medium. It is therefore recommended that special precautions be taken when air or gas is used for test purposes.

acquired by a new owner(s), the proof test reports may be used by the new owner(s) without retesting, provided all of the following are met:

(a) the new owner(s) takes responsibility for the proof tests;

(b) the proof test reports reflect the name of the new owner(s);

(c) the proof test reports indicate the actual test was performed by the former Manufacturer;

(d) the proof test report(s) is acceptable to the Inspector of the new owner(s) as indicated by his/her signature on the Manufacturer's report of the test.

UG-101(b) The tests in these paragraphs may be used only for the purpose of establishing the maximum allowable working pressure of those elements or component parts for which the thickness cannot be determined by

means of the design rules given in this Division. The maximum allowable working pressure of all other elements or component parts shall not be greater than that determined by means of the applicable design rules.

Tests to establish the maximum allowable working pressure of vessels, or vessel parts, shall be witnessed by and be acceptable to the Inspector, as indicated by his signature on the Manufacturer's report of the test. The report shall include sufficient detail to describe the test, the instrumentation and the methods of calibration used, and the results obtained. The report shall be made available to the Inspector for each application [see U-2(b) and UG-90(2)].

UG-101(c) The vessel or vessel part for which the maximum allowable working pressure is to be established shall not previously have been subjected to a pressure greater than 1.3 times the desired or anticipated maximum allowable working pressure, adjusted for operating temperature as provided in (k) below.

UG-101(d) Duplicate and Similar Parts. When the maximum allowable working pressure of a vessel or vessel part has been established by a proof test, duplicate parts, or geometrically similar parts, that meet all of the requirements in (d)(1) or (d)(2) below, need not be proof tested but shall be given a hydrostatic pressure test in accordance with UG-99, or a pneumatic pressure test in accordance with UG-100, except as otherwise provided in UCI-101, and UCD-101.

UG-101(d)(1) Duplicate Parts. All of the following requirements shall be met in order to qualify a part as a duplicate of the part that had been proof tested:

(a) same basic design configuration and type of construction;

(b) the material of the duplicate part is either:

(1) the same material specifications:

(a) alloy;

(b) grade, class;

(c) type, form;

(d) heat treatment; or

(2) the same or closely similar material when only the material specification, the alloy, grade, or form is different, provided the material meets the following additional requirements:

(a) has allowable stress in tension equal to or greater than the material used in the proof tested part at the test temperature [see (k) below];

(b) has the same P-Number (Section IX);

(c) for carbon or low alloy steels (Part UCS), has the same or tougher material grouping in UCS-66, Fig. UCS-66, and Notes;

(c) the nominal dimensions, diameter, or width and height, of the duplicate parts shall be the same, and the corresponding nominal thicknesses shall be the same as those used in the proof test. The length shall not be longer than that proof tested.

(d) heat treatment shall be the same as performed on the original part that was tested;

(e) the MAWP shall be calculated according to (e) below;

(f) when there are permissible deviations from the original part that was proof tested, a supplement to the original Proof Test Report shall be prepared that states and evaluates each deviation.

UG-101(d)(2) Geometrically Similar Parts. The maximum allowable working pressure for geometrically similar parts may be established by a series of proof tests that uniformly cover the complete range of sizes, pressure, or other variables by interpolation from smooth curves plotted from the results of the tests.[35]

(a) Sufficient tests shall be performed to provide at least five data points that are at increments that are within 20% to 30% of the range covered.

(b) The curves shall be based on the lower bound of the test data.

(c) Extrapolation is not permitted.

UG-101(e) Proof test methods UG-101(l), (m), (n), and (o) below establish a pressure at which the test is terminated. The results of the test are recorded in a Proof Test Report according to UG-101(b).

UG-101(e)(1) The MAWP for the first duplicate part, as defined in UG-101(d), to be put into service, shall be calculated according to the equations given in the proof test method applied.

The requirements for NDE are given in UG-24 and UW-12. Other requirements are based on thickness or material. These apply to parts which are to be put into service. It is not necessary to examine the part actually tested.

UG-101(e)(2) For subsequent duplicate parts, the MAWP may be recalculated for a different extent of NDE in a supplement to the original Proof Test Report.

UG-101(e)(3) The effect of the location of a weld joint may be evaluated and included in the Proof Test Report.

UG-101(f) A retest shall be allowed on a duplicate vessel or vessel part if errors or irregularities are obvious in the test results.

UG-101(g) In tests for determination of governing stresses, sufficient locations on the vessel shall be investigated to ensure that measurements are taken at the most critical areas. As a check that the measurements are being

[35] Examples of the use of modeling techniques are found in UG-127(a)(1)(b)(2) and UG-131(d)(2)(b), or refer to text books on the subject.

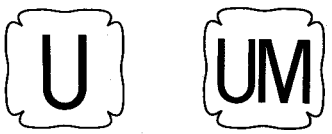

FIG. UG-116 OFFICIAL SYMBOLS FOR STAMP TO DENOTE THE AMERICAN SOCIETY OF MECHANICAL ENGINEERS' STANDARD

requirements of the following paragraphs and in addition with the requirements for *Marking and Reports* given in the applicable Parts of Subsections B and C.

04 *(b)* The units of measurement used in Manufacturer's Data Reports, Manufacturer's Certificates of Compliance (UG-120), and capacity certification of pressure relief devices, and in marking or stamping pressure vessels, pressure vessel parts, and pressure relief devices, required by this Division, shall be either U.S. Customary units or SI units. However, one system shall be used consistently throughout for construction of pressure vessels. This includes all phases of construction (e.g., materials, design calculations, reports, fabrication, marking, and stamping). See U-4.

04 UG-116 REQUIRED MARKING

(a) Each pressure vessel shall be marked with the following:

(1)(a) the official Code U Symbol shown in Fig. UG-116 sketch (a) on vessels inspected in accordance with the requirements in UG-90 through UG-97 (when inspected by a user's Inspector as provided in UG-91, the word USER shall be marked above the Code Symbol); or

(b) the official UM Symbol shown in Fig. UG-116 sketch (b) on vessels constructed in accordance with the provisions in U-1(j).

(2) name of the Manufacturer of the pressure vessel preceded by the words "certified by";

(3) maximum allowable working pressure[36,37] _____ psi (kPa) at _____°F (°C);

(4) maximum allowable external working pressure[38], _____ psi (kPa) at _____°F (°C);

(5) minimum design metal temperature _____°F (°C) at maximum allowable working pressure _____ psi (kPa)[36] A05

(6) Manufacturer's serial number;

(7) year built.

(b)(1) The type of construction used for the vessel shall be indicated directly under the Code Symbol by applying the appropriate letter(s) as follows: vessels having Category A, B, or C joints (except nozzles or other openings and their attachment) in or joining parts of the vessels:

Type of Construction	Letter(s)
Arc or gas welded	W
Pressure welded (except resistance)	P
Brazed	B
Resistance welded	RES

(2) Vessels embodying a combination of types of construction shall be marked to indicate all of the types of construction used.

(c) When a vessel is intended for special service and the special requirements have been complied with [see UG-120(d)], the appropriate lettering shall be applied as listed below:

Lethal Service	L
Unfired Steam Boiler	UB
Direct Firing	DF

This lettering shall be separated by a hyphen and applied after the lettering of (b) above.

(d) The maximum allowable working pressure and temperature to be indicated on vessels embodying a combination of types of construction and material shall be based on the most restrictive detail of construction and material used.

(e) When a vessel has been radiographed in accordance with UW-11, marking shall be applied under the Code Symbol as follows:

(1) "RT 1" when all pressure-retaining butt welds, other than Category B and C butt welds associated with nozzles and communicating chambers that neither exceed NPS 10 (DN 250) nor $1\frac{1}{8}$ in. (29 mm) wall thickness [except as required by UHT-57(a)], have been radiographically examined for their full length in the manner prescribed in UW-51; full radiography of the above exempted Category B and C butt welds, if performed, may be recorded on the Manufacturer's Data Report; or

(2) "RT 2" when the complete vessel satisfies the requirements of UW-11(a)(5) and when the spot radiography requirements of UW-11(a)(5)(b) have been applied; or

(3) "RT 3" when the complete vessel satisfies the spot radiography requirements of UW-11(b); or

[36] When a pressure vessel is expected to operate at more than one pressure and temperature condition, other values of maximum allowable working pressure with the coincident permissible temperature may be added as required. See UG-20(b).

[37] The maximum allowable working pressure may be assumed to be the same as the design pressure when calculations are not made to determine the maximum allowable working pressure.

[38] The maximum allowable external working pressure is required only when specified as a design condition.

(4) "RT 4" when only part of the complete vessel has satisfied the radiographic requirements of UW-11(a) or where none of the markings "RT 1," "RT 2," or "RT 3" are applicable.

The extent of radiography and the applicable joint efficiencies shall be noted on the Manufacturer's Data Report.

(f)(1) The letters HT shall be applied under the Code Symbol when the complete vessel has been postweld heat treated as provided in UW-10.

(2) The letters PHT shall be applied under the Code Symbol when only part of the complete vessel has been postweld heat treated as provided in UW-10.

The extent of the postweld heat treatment shall be noted on the Manufacturer's Data Report.

(g) The Manufacturer shall have a valid Certificate of Authorization, and, with the acceptance of the Inspector, shall apply the Code Symbol to the vessel, which, together with the final certification [see U-1(j) and UG-120] shall indicate that all requirements of this Division have been met.

(1) Except as provided in (2) below, the Code Symbol shall be applied after the hydrostatic test or pneumatic test.

(2) The Code Symbol may be preapplied to a nameplate. The nameplate may be attached to the vessel after the final fabrication and examination sequence but before the hydrostatic tests or pneumatic test provided the procedure for sequence of stamping is described in the Manufacturer's accepted Quality Control System.

A05 *(h)(1)* Parts of vessels for which Partial Data Reports are required in UG-120(c) shall be marked by the parts Manufacturer, with a nameplate or stamping, with the following:

(a) the official Code Symbol shown in Fig. UG-116 sketch (a), above the word "PART";

(b) name of the Manufacturer of the part of the pressure vessel preceded by the words "certified by";

(c) the Manufacturer's serial number.

Parts may be stamped with the ASME Code Symbol without being pressure tested prior to shipment. If testing was not performed, this shall be indicated in the Remarks section of the U-2 and U-2A Manufacturer's Partial Data Reports (see Appendix W, Forms U-2 and U-2A).

This requirement does not apply to such items as handhole covers, manhole covers and their accessories. [See (l) below.]

(h)(2) As an alternative to nameplates or stamping, parts 5 in O.D. and under may be marked with an identification acceptable to the Inspector and traceable to the Form U-2 or Form U-2A Manufacturer's Partial Data Report. Such marking shall be of a type that will remain visible until the parts are installed. The Code Symbol is not required.

(h)(3) No accessory or part of a pressure vessel may be marked "ASME" or "ASME Std." unless so specified in this Division.

(i) All required markings shall be located in a conspicuous place on the vessel, preferably near a manhole or handhole (see M-3).

(j) Either of the following arrangements may be used in marking vessels having two or more independent pressure chambers designed for the same or different operating conditions. Each detachable chamber shall be marked so as to identify it positively with the combined unit.

(1) The marking may be grouped in one location on the vessel provided it is arranged so as to indicate clearly the data applicable to each chamber including the maximum differential pressure for the common elements when this pressure is less than the higher pressure in the adjacent chambers.

(2) The complete required marking may be applied to each independent pressure chamber, provided additional marking, such as stock space, jacket, tubes, or channel box, is used to indicate clearly to which chamber the data apply.

(k) In multiple-chamber vessels, only the parts of those chambers which are required to be built under this Division (see U-1) need bear the required marking. However, it is recommended that Manufacturers indicate on such vessels the working conditions for which the non-Code chambers were designed.

(l) Removable pressure parts shall be permanently marked in a manner to identify them with the vessel or chamber of which they form a part. This does not apply to manhole covers, handhole covers, and their accessory parts provided the marking requirements of UG-11 are met.

UG-117 CERTIFICATES OF AUTHORIZATION AND CODE SYMBOL STAMPS

UG-117(a) A Certificate of Authorization to use the Code U, UM, UV, or UD Symbols shown in Figs. UG-116, UG-129.1, and UG-129.2 will be granted by the Society pursuant to the provisions of the following paragraphs. Stamps for applying the Code Symbol shall be obtained from the Society. For those items to be stamped with the UM, UV, or UD Code Symbol, a Certified Individual shall provide oversight to ensure that each use of the UM, UV, or UD Symbol is in accordance with the

requirements of this Division. In addition, each use of the UM, UV, or UD Code Symbol is to be documented on the Certificate of Compliance Form (U-3) for UM vessels, or a Certificate of Conformance Form (UV-1) or (UD-1) as appropriate.

(1) Requirements for the Certified Individual (CI). The *(CI)* shall:

(a) be an employee of the Manufacturer or Assembler.

(b) be qualified and certified by the Manufacturer or Assembler. Qualifications shall include as a minimum:

(1) knowledge of the requirements of this Division for the application of the appropriate Code Symbol;

(2) knowledge of the Manufacturer's or Assembler's quality program;

(3) training commensuate with the scope, complexity, or special nature of the activities to which oversight is to be provided.

(c) the Manufacturer's written Quality Control System includes procedures to control the development, distribution, and retention of the Partial Data Reports.

(4) For guidance in preparing Partial Data Reports, see Appendix W.

(d) This Division, in paragraphs such as UW-2, UF-1, UF-32(b), UB-1, UB-22, UCS-66, UNF-56, UHA-51, UCL-27, and UHT-6, establishes special requirements to qualify a vessel for certain "special services." (Paragraphs, such as UW-2, prohibit certain types of construction or materials in some special services.) The special services to which special requirements are applicable are classified as follows:

(1) lethal service [for example, see UW-2(a)];

04 *(2)* services below certain temperatures (for example, see UW-2(b), UCS-65, UHA-51, and UHT-6);

(3) unfired steam boiler [for example, see UW-2(c)];

(4) direct firing [for example, see UW-2(d)].

When a vessel is intended for such special services, the special service and the paragraphs of special requirements complied with shall be indicated on the Data Reports.

(e) For sample forms and guidance in their preparation, see Appendix W.

PRESSURE RELIEF DEVICES

04 UG-125 GENERAL

A05 *(a)* All pressure vessels within the Scope of this Division, irrespective of size or pressure, shall be provided with pressure relief devices in accordance with the requirements of UG-125 through UG-137.

(1) It is the responsibility of the user to ensure that the required pressure relief devices are properly installed prior to initial operation.

(2) It is the responsibility of the user or his/her designated agent to size and select the pressure relief device(s) based on its intended service. Intended service considerations shall include, but not necessarily be limited to, the following:

(a) normal operating and upset conditions

(b) fluids

(c) fluid phases

(3) These pressure relief devices need not be supplied by the vessel Manufacturer.

(4) Unless otherwise defined in this Division, the definitions relating to pressure relief devices in Section 2 of ASME PTC 25 shall apply.

(b) An unfired steam boiler, as defined in U-1(g), shall be equipped with pressure relief devices required by Section I insofar as they are applicable to the service of the particular installation.

(c) All pressure vessels other than unfired steam boilers shall be protected by a pressure relief device that shall prevent the pressure from rising more than 10% or 3 psi (20 kPa), whichever is greater, above the maximum allowable working pressure except as permitted in (1) and (2) below. (See UG-134 for pressure settings.)

(1) When multiple pressure relief devices are provided and set in accordance with UG-134(a), they shall prevent the pressure from rising more than 16% or 4 psi (30 kPa), whichever is greater, above the maximum allowable working pressure.

(2) Where an additional hazard can be created by exposure of a pressure vessel to fire or other unexpected sources of external heat, supplemental pressure relief devices shall be installed to protect against excessive pressure. Such supplemental pressure relief devices shall be capable of preventing the pressure from rising more than 21% above the maximum allowable working pressure. [For additional information, see Appendix M, M-14(a)]. The same pressure relief devices may be used to satisfy the capacity requirements of (c) or (c)(1) above and this paragraph provided the pressure setting requirements of UG-134(a) are met.

(3) Pressure relief devices, intended primarily for protection against exposure of a pressure vessel to fire or other unexpected sources of external heat installed on vessels having no permanent supply connection and used for storage at ambient temperatures of nonrefrigerated liquefied compressed gases,[41] are excluded from the requirements of (c)(1) and (c)(2) above, provided:

(a) the pressure relief devices are capable of preventing the pressure from rising more than 20% above the maximum allowable working pressure of the vessels;

(b) the set pressure marked on these devices shall not exceed the maximum allowable working pressure of the vessels;

(c) the vessels have sufficient ullage to avoid a liquid full condition;

(d) the maximum allowable working pressure of the vessels on which these pressure relief devices are installed is greater than the vapor pressure of the stored liquefied compressed gas at the maximum anticipated temperature[42] that the gas will reach under atmospheric conditions; and

(e) pressure relief valves used to satisfy these provisions also comply with the requirements of UG-129(a)(5), UG-131(c)(2), and UG-134(d)(2).

[41] For the purpose of these rules, gases are considered to be substances having a vapor pressure greater than 40 psia (300 kPa absolute) at 100°F (40°C).

[42] Normally this temperature should not be less than 115°F (45°C).

A05 *(d)* Pressure relief devices shall be constructed, located, and installed so that they are readily accessible for inspection, replacement, and repair and so that they cannot be readily rendered inoperative (see Appendix M).

(e) Pressure relief valves or nonreclosing pressure relief devices[43] may be used to protect against overpressure. Nonreclosing pressure relief devices may be used either alone or, if applicable, in combination with pressure relief valves on vessels.

NOTE: Use of nonreclosing pressure relief devices of some types may be advisable on vessels containing substances that may render a pressure relief valve inoperative, where a loss of valuable material by leakage should be avoided, or where contamination of the atmosphere by leakage of noxious fluids must be avoided. The use of rupture disk devices may also be advisable when very rapid rates of pressure rise may be encountered.

(f) Vessels that are to operate completely filled with liquid shall be equipped with pressure relief devices designed for liquid service, unless otherwise protected against overpressure.

(g) The pressure relief devices required in (a) above need not be installed directly on a pressure vessel when either of the following conditions apply:

(1) the source of pressure is external to the vessel and is under such positive control that the pressure in the vessel cannot exceed the maximum allowable working pressure at the operating temperature except as permitted in (c) above (see UG-98), or under the conditions set forth in Appendix M.

(2) there are no intervening stop valves between the vessel and the pressure relief device or devices except as permitted under UG-135(d).

NOTE: Pressure reducing valves and similar mechanical or electrical control instruments, except for pilot operated pressure relief valves as permitted in UG-126(b), are not considered as sufficiently positive in action to prevent excess pressures from being developed.

(h) Pressure relief valves for steam service shall meet the requirements of UG-131(b).

UG-126 PRESSURE RELIEF VALVES[44]

(a) Safety, safety relief, and relief valves shall be of the direct spring loaded type.

(b) Pilot operated pressure relief valves may be used, provided that the pilot is self-actuated and the main valve will open automatically at not over the set pressure and will discharge its full rated capacity if some essential part of the pilot should fail.

(c) The spring in a pressure relief valve shall not be set for any pressure more than 5% above or below that for which the valve is marked, unless the setting is within the spring design range established by the valve Manufacturer or is determined to be acceptable to the Manufacturer. The initial adjustment shall be performed by the Manufacturer, his authorized representative, or an Assembler, and a valve data tag shall be provided that identifies the set pressure capacity and date. The valve shall be sealed with a seal identifying the Manufacturer, his authorized representative, or the Assembler performing the adjustment.

(d) The set pressure tolerances, plus or minus, of pressure relief valves shall not exceed 2 psi (15 kPa) for pressures up to and including 70 psi (500 kPa) and 3% for pressures above 70 psi (500 kPa).

UG-127 NONRECLOSING PRESSURE RELIEF DEVICES

(a) Rupture Disk Devices[45]

(1) General. Every rupture disk shall have a marked burst pressure established by rules of UG-137(d)(3) within a manufacturing design range[46] at a specified disk temperature[47] and shall be marked with a lot[48] number. The burst pressure tolerance at the specified disk temperature shall not exceed ±2 psi (±15 kPa) for marked burst pressure up to and including 40 psi (300 kPa) and ±5% for marked burst pressure above 40 psi (300 kPa).

[43] A *pressure relief valve* is a pressure relief device which is designed to reclose and prevent the further flow of fluid after normal conditions have been restored. A *nonreclosing pressure relief device* is a pressure relief device designed to remain open after operation.

[44] A *safety valve* is a pressure relief valve actuated by inlet static pressure and characterized by rapid opening or pop action. A *relief valve* is a pressure relief valve actuated by inlet static pressure which opens in proportion to the increase in pressure over the opening pressure. A *safety relief valve* is a pressure relief valve characterized by rapid opening or pop action, or by opening in proportion to the increase in pressure over the opening pressure, depending on application. A *pilot operated pressure relief valve* is a pressure relief valve in which the major relieving device is combined with and is controlled by a self-actuated auxiliary pressure relief valve.

[45] A *rupture disk device* is a nonreclosing pressure relief device actuated by inlet static pressure and designed to function by the bursting of a pressure containing disk. A *rupture disk* is the pressure containing and pressure sensitive element of a rupture disk device. Rupture disks may be designed in several configurations, such as plain flat, prebulged, or reverse buckling. A *rupture disk holder* is the structure which encloses and clamps the rupture disk in position.

[46] The *manufacturing design range* is a range of pressure within which the marked burst pressure must fall to be acceptable for a particular requirement as agreed upon between the rupture disk Manufacturer and the user or his agent. The manufacturing design range must be evaluated in conjuction with the specified burst pressure to ensure that the marked burst pressure of the rupture disk will always be within applicable limits of UG-134. Users are cautioned that certain types of rupture disks have manufacturing ranges that can result in a marked burst pressure greater than the specified burst pressure.

[47] The specified disk temperature supplied to the rupture disk Manufacturer shall be the temperature of the disk when the disk is expected to burst.

[48] A *lot of rupture disks* is those disks manufactured of a material at the same time, of the same size, thickness, type, heat, and manufacturing process including heat treatment.

UG-128 LIQUID PRESSURE RELIEF VALVES

Any liquid pressure relief valve used shall be at least NPS ½ (DN 15).

UG-129 MARKING

(a) Safety, Safety Relief, Relief, Liquid Pressure Relief, and Pilot Operated Pressure Relief Valves. Each safety, safety relief, relief, liquid pressure relief, and pilot operated pressure relief valve NPS ½ (DN 15) and larger shall be plainly marked by the Manufacturer or Assembler with the required data in such a way that the marking will not be obliterated in service. The marking may be placed on the valve or on a plate or plates that satisfy the requirements of UG-119:

(1) the name, or an acceptable abbreviation, of the Manufacturer and the Assembler;

(2) Manufacturer's design or type number;

(3) NPS size _____ (the nominal pipe size of the valve inlet);

(4) set pressure _____ psi (kPa), and, if applicable per UG-136(d)(4), cold differential test pressure _____ psi (kPa);

(5) certified capacity (as applicable):

(a) lb/hr of saturated steam at an overpressure of 10% or 3 psi (20 kPa), whichever is greater for valves certified on steam complying with UG-131(b); or

(b) gal/min of water at 70°F (20°C) at an overpressure of 10% or 3 psi (20 kPa), whichever is greater for valves certified on water; or

(c) SCFM [standard cubic feet per minute at 60°F and 14.7 psia (20°C and 101 kPa)], or lb/min, of air at an overpressure of 10% or 3 psi (20 kPa), whichever is greater. Valves that are capacity certified in accordance with UG-131(c)(2) shall be marked "at 20% overpressure."

(d) In addition to one of the fluids specified above, the Manufacturer may indicate the capacity in other fluids (see Appendix 11).

(6) year built, or alternatively, a coding may be marked on the valve such that the valve Manufacturer or Assembler can identify the year the valve was assembled or tested;

(7) ASME Symbol as shown in Fig. UG-129.1. The pilot of a pilot operated pressure relief valve shall be plainly marked by the Manufacturer or Assembler showing the name of the Manufacturer, the Manufacturer's design or type number, the set pressure in pounds per square inch, and the year built, or alternatively, a coding that the Manufacturer can use to identify the year built.



FIG. UG-129.1 OFFICIAL SYMBOL FOR STAMP TO DENOTE THE AMERICAN SOCIETY OF MECHANICAL ENGINEERS' STANDARD FOR PRESSURE RELIEF VALVES

On valves smaller than NPS ½ (DN 15), the markings may be made on a metal tag attached by wire or adhesive meeting the requirements of UG-119 or other means suitable for the service conditions.

(b) Safety and safety relief valves certified for a steam discharging capacity under the provisions of Section I and bearing the official Code Symbol Stamp of Section I for safety valves may be used on pressure vessels. The rated capacity in terms of other fluids shall be determined by the method of conversion given in Appendix 11. [See UG-131(h).]

(c) Pressure Relief Valves in Combination With Rupture Disk Devices. Pressure relief valves in combination with rupture disk devices shall be marked with the capacity as established in accordance with UG-127(a)(3)(b)(2) (using 0.90 factor) or the combination capacity factor established by test in accordance with UG-132(a) or (b), in addition to the marking of UG-129(a) and (f) below. The marking may be placed on the pressure relief valve or rupture disk device or on a plate or plates that satisfy the requirements of UG-119. The marking shall include the following:

(1) name of Manufacturer of valve;

(2) design or type number of valve;

(3) name of Manufacturer of rupture disk device;

(4) design or type number of rupture disk device;

(5) capacity or combination capacity factor;

(6) name of organization responsible for this marking. This shall be either the vessel user, vessel Manufacturer, rupture disk Manufacturer, or pressure relief valve Manufacturer.

(d) Pressure Relief Valves in Combination With Breaking Pin Devices. Pressure relief valves in combination with breaking pin devices shall be marked in accordance with (a) above. In addition, the rated pressure shall be marked on the breaking pin and the breaking pin housing.

(e) Rupture Disk Devices. Every rupture disk shall be plainly marked by the Manufacturer in such a way that the marking will not be obliterated in service. The rupture disk marking may be placed on the flange of the disk or A05



FIG. UG-129.2 OFFICIAL SYMBOL FOR STAMP TO DENOTE THE AMERICAN SOCIETY OF MECHANICAL ENGINEERS' STANDARD FOR RUPTURE DISK DEVICES

on a metal tab that satisfies the requirements of UG-119. The marking shall include the following:

(1) the name or identifying trademark of the Manufacturer;

(2) Manufacturer's design or type number;

(3) lot number;

(4) disk material;

(5) size _____ [NPS (DN) of rupture disk holder];

(6) marked burst pressure _____ psi (kPa);

(7) specified disk temperature _____ °F (°C);

(8) minimum net flow area _____ sq in. (sq mm);

(9) certified flow resistance (as applicable):

(a) K_{RG} _____ for rupture disk certified on air or gases; or

(b) K_{RL} _____ for rupture disk certified on liquid; or

(c) K_{RGL} _____ for rupture disk certified on air or gases, and liquid;

(10) ASME symbol as shown in Fig. UG-129.2;

(11) year built, or alternatively, a coding may be marked on the rupture disk such that the rupture disk device Manufacturer can identify the year the rupture disk device was assembled and tested.

Items (1), (2), (5), (10), and (11) above and flow direction shall also be marked on the rupture disk holder.

(f) Spring Loaded Nonreclosing Pressure Relief Devices. Spring loaded nonreclosing pressure relief devices shall be marked in accordance with (a) above except that the Code Symbol Stamp is to be applied only when the capacity has been established and certified in accordance with UG-127(c)(3) and all other requirements of UG-130 have been met.

UG-130 CODE SYMBOL STAMP

Each pressure relief device[58] to which the Code Symbol (see Figs. UG-129.1 and UG-129.2) will be applied shall have been fabricated or assembled by a Manufacturer or Assembler holding a valid Certificate of Authorization (UG-117) and capacity certified in accordance with the requirements of this Division. A Certified Individual (*CI*) shall provide oversight as required by UG-117(a). Each use of the Code Symbol shall also be documented on a Certificate of Conformance Form UV-1 or UD-1, as appropriate.

[58] Vacuum relief devices are not covered by Code Symbol Stamp requirements.

UG-131 CERTIFICATION OF CAPACITY OF PRESSURE RELIEF DEVICES

(a) Before the Code Symbol is applied to any pressure relief device, the device Manufacturers shall have the capacity of their devices certified in accordance with the provisions of these paragraphs. For pressure relief valves, (b) through (j) below apply and for rupture disk devices, (k) through (r) below apply except where noted.

(b)(1) Capacity certification tests for pressure relief valves for compressible fluids shall be conducted on dry saturated steam, or air, or gas. When dry saturated steam is used, the limits for test purposes shall be 98% minimum quality and 20°F (10°C) maximum superheat. Correction from within these limits may be made to the dry saturated condition. Pressure relief valves for steam service may be rated as above, but at least one valve of each series shall be tested on steam to demonstrate the steam capacity and performance.

(2) Capacity certification tests for pressure relief valves for incompressible fluids shall be conducted on water at a temperature between 40°F (5°C) and 125°F (4°C and 50°C).

(c)(1) Capacity certification tests shall be conducted at a pressure which does not exceed the pressure for which the pressure relief valve is set to operate by more than 10% or 3 psi (20 kPa), whichever is greater, except as provided in (c)(2) below. Minimum pressure for capacity certification tests shall be at least 3 psi (20 kPa) above set pressure. The reseating pressure shall be noted and recorded.

(2) Capacity certification tests of pressure relief valves for use in accordance with UG-125(c)(3) may be conducted at a pressure not to exceed 120% of the stamped set pressure of the valve.

(3)(a) Pressure relief valves for compressible fluids having an adjustable blowdown construction shall be adjusted prior to testing so that the blowdown does not exceed 5% of the set pressure or 3 psi (20 kPa), whichever is greater.

(b) The blowdown of pressure relief valves for incompressible fluids and pressure relief valves for compressible fluids having nonadjustable blowdown shall be noted and recorded.

two larger sizes of the design of rupture disk device and pressure relief valve to determine a Combination Capacity Factor applicable to larger sizes. If a greater Combination Capacity Factor is established and can be certified, it may be used for all larger sizes of the combination, but shall not be greater than one.

(2) If desired, additional tests may be conducted at higher pressures in accordance with (a)(4)(c) and (a)(4)(d) above to establish a maximum Combination Capacity Factor to be used at all pressures higher than the highest tested, but shall not be greater than one.

(c) Capacity of Breaking Pin Devices in Combination With Pressure Relief Valves

(1) Breaking pin devices in combination with pressure relief valves shall be capacity tested in compliance with UG-131(d) or UG-131(e) as a combination.

(2) Capacity certification and Code Symbol stamping shall be based on the capacity established in accordance with these paragraphs.

UG-133 DETERMINATION OF PRESSURE RELIEVING REQUIREMENTS

(a) Except as permitted in (b) below, the aggregate capacity of the pressure relief devices connected to any vessel or system of vessels for the release of a liquid, air, steam, or other vapor shall be sufficient to carry off the maximum quantity that can be generated or supplied to the attached equipment without permitting a rise in pressure within the vessel of more than 16% above the maximum allowable working pressure when the pressure relief devices are blowing.

(b) Pressure relief devices as permitted in UG-125(c)(2), as protection against excessive pressure caused by exposure to fire or other sources of external heat, shall have a relieving capacity sufficient to prevent the pressure from rising more than 21% above the maximum allowable working pressure of the vessel when all pressure relief devices are blowing.

A05 *(c)* Vessels connected together by a system of adequate piping not containing valves which can isolate any vessel, and those containing valves in compliance with Appendix M, M-5, may be considered as one unit in figuring the required relieving capacity of pressure relief devices to be furnished.

(d) Heat exchangers and similar vessels shall be protected with a pressure relief device of sufficient capacity to avoid overpressure in case of an internal failure.

(e) The official rated capacity, or the certified flow resistance and minimum net flow area, of a pressure relief device shall be that which is stamped on the device and guaranteed by the Manufacturer.

(f) The rated pressure relieving capacity of a pressure relief valve for other than steam or air shall be determined by the method of conversion given in Appendix 11.

(g) To prorate the relieving capacity at any relieving pressure greater than $1.10p$, as permitted under UG-125, a multiplier may be applied to the official relieving capacity of a pressure relief device as follows:

(U.S. Customary Units)

$$\frac{P + 14.7}{1.10p + 14.7}$$

(SI Units)

$$\frac{P + 101}{1.10p + 101}$$

where

P = relieving pressure, psig (kPa gage)
p = set pressure, psig (kPa gage)

For steam pressures above 1,500 psig (10.3 MPa gage), the above multiplier is not applicable. For steam valves with relieving pressures greater than 1,500 psig (10 MPa gage) and less than or equal to 3,200 psig (22.1 MPa gage), the capacity at relieving pressures greater than $1.10p$ shall be determined using the equation for steam and the correction factor for high pressure steam in UG-131(e)(2) with the permitted absolute relieving pressure and the coefficient K for that valve design.

UG-134 PRESSURE SETTING OF PRESSURE RELIEF DEVICES

(a) When a single pressure relief device is used, the set pressure[60] marked on the device shall not exceed the maximum allowable working pressure of the vessel. When the required capacity is provided in more than one pressure relief device, only one pressure relief device need be set at or below the maximum allowable working pressure, and the additional pressure relief devices may be set to open at higher pressures but in no case at a pressure higher than 105% of the maximum allowable working pressure, except as provided in (b) below.

(b) For pressure relief devices permitted in UG-125(c)(2) as protection against excessive pressure caused by exposure to fire or other sources of external heat, the device marked set pressure shall not exceed 110% of the maximum allowable working pressure of the vessel. If such a pressure relief device is used to meet the requirements of both UG-125(c) and UG-125(c)(2), the device marked set pressure shall not be over the maximum allowable working pressure.

(c) The pressure relief device set pressure shall include the effects of static head and constant back pressure.

(d)(1) The set pressure tolerance for pressure relief valves shall not exceed ±2 psi (15 kPa) for pressures up to and including 70 psi (500 kPa) and ±3% for pressures above 70 psi (500 kPa), except as covered in (d)(2) below.

(2) The set pressure tolerance of pressure relief valves which comply with UG-125(c)(3) shall be within −0%, +10%.

(e) The burst pressure tolerance for rupture disk devices at the specified disk temperature shall not exceed ±2 psi (15 kPa) of marked burst pressure up to 40 psi (300 kPa) and ±5% of marked burst pressure 40 psi (300 kPa) and over.

UG-135 INSTALLATION

A05 *(a)* Pressure relief devices intended for relief of compressible fluids shall be connected to the vessel in the vapor space above any contained liquid or to piping connected to the vapor space in the vessel which is to be protected. Pressure relief devices intended for relief of liquids shall be connected below the liquid level. Alternative connection locations are permitted, depending on the potential vessel overpressure scenarios and the type of relief device selected, provided the requirements of UG-125(a)(2) and UG-125(c) are met.

(b)(1) The opening through all pipe, fittings, and nonreclosing pressure relief devices (if installed) between a pressure vessel and its pressure relief valve shall have at least the area of the pressure relief valve inlet. The characteristics of this upstream system shall be such that the pressure drop will not reduce the relieving capacity below that required or adversely affect the proper operation of the pressure relief valve.

(2) The opening in the vessel wall shall be designed to provide unobstructed flow between the vessel and its pressure relief device (see Appendix M).[61]

(c) When two or more required pressure relief devices are placed on one connection, the inlet internal cross-sectional area of this connection shall be either sized to avoid restricting flow to the pressure relief devices or made at least equal to the combined inlet areas of the safety devices connected to it. The flow characteristics of the upstream system shall satisfy the requirements of (b) above. (See Appendix M.)

(d) There shall be no intervening stop valves between the vessel and its pressure relief device or devices, or between the pressure relief device or devices and the point of discharge, except:

(1) when these stop valves are so constructed or positively controlled that the closing of the maximum number of block valves possible at one time will not reduce the pressure relieving capacity provided by the unaffected pressure relief devices below the required relieving capacity; or

(2) under conditions set forth in Appendix M.

(e) The pressure relief devices on all vessels shall be so installed that their proper functioning will not be hindered by the nature of the vessel's contents.

(f) Discharge lines from pressure relief devices shall be designed to facilitate drainage or shall be fitted with drains to prevent liquid from lodging in the discharge side of the pressure relief device, and such lines shall lead to a safe place of discharge. The size of the discharge lines shall be such that any pressure that may exist or develop will not reduce the relieving capacity of the pressure relief devices below that required to properly protect the vessel, or adversely affect the proper operation of the pressure relief devices. [See UG-136(a)(8) and Appendix M.]

UG-136 MINIMUM REQUIREMENTS FOR PRESSURE RELIEF VALVES

UG-136(a) Mechanical Requirements

UG-136(a)(1) The design shall incorporate guiding arrangements necessary to ensure consistent operation and tightness.

UG-136(a)(2) The spring shall be designed so that the full lift spring compression shall be no greater than 80% of the nominal solid deflection. The permanent set of the spring (defined as the difference between the free height and height measured 10 min after the spring has been compressed solid three additional times after presetting at room temperature) shall not exceed 0.5% of the free height.

UG-136(a)(3) Each pressure relief valve on air, water over 140°F (60°C), or steam service shall have a substantial lifting device which when activated will release the seating force on the disk when the pressure relief valve is subjected to a pressure of at least 75% of the set pressure of the valve. Pilot operated pressure relief valves used on these services shall be provided with either a lifting device as described above or means for connecting and applying pressure to the pilot adequate to verify that the moving parts critical to proper operation are free to move.

UG-136(a)(4) The seat of a pressure relief valve shall be fastened to the body of the pressure relief valve in such a way that there is no possibility of the seat lifting.

[61] Users are warned that the proper operation of various rupture disk devices depends upon following the Manufacturer's installation instructions closely with regard to the flow direction marked on the device. Some device designs will burst at pressures much greater than their marked burst pressure when installed with the process pressure on the vent side of the device.

UG-136(a)(5) In the design of the body of the pressure relief valve, consideration shall be given to minimizing the effects of deposits.

UG-136(a)(6) Pressure relief valves having screwed inlet or outlet connections shall be provided with wrenching surfaces to allow for normal installation without damaging operating parts.

UG-136(a)(7) Means shall be provided in the design of all pressure relief valves for use under this Division for sealing all initial adjustments which can be made without disassembly of the valve. Seals shall be installed by the Manufacturer or Assembler at the time of initial adjustment. Seals shall be installed in a manner to prevent changing the adjustment without breaking the seal. For pressure relief valves larger than NPS ½ (DN 15), the seal shall serve as a means of identifying the Manufacturer or Assembler making the initial adjustment.

UG-136(a)(8) If the design of a pressure relief valve is such that liquid can collect on the discharge side of the disk, except as permitted in (a)(9) below, the valve shall be equipped with a drain at the lowest point where liquid can collect (for installation, see UG-135).

UG-136(a)(9) Pressure relief valves that cannot be equipped with a drain as required in (a)(8) above because of design or application may be used provided:

(a) the pressure relief valves are used only on gas service where there is neither liquid discharged from the valve nor liquid formed by condensation on the discharge side of the valve; and

(b) the pressure relief valves are provided with a cover or discharge piping per UG-135(f) to prevent liquid or other contaminant from entering the discharge side of the valve; and

(c) the pressure relief valve is marked FOR GAS SERVICE ONLY in addition to the requirements of UG-129.

UG-136(a)(10) For pressure relief valves of the diaphragm type, the space above the diaphragm shall be vented to prevent a buildup of pressure above the diaphragm. Pressure relief valves of the diaphragm type shall be designed so that failure or deterioration of the diaphragm material will not impair the ability of the valve to relieve at the rated capacity.

UG-136(b) Material Selections

UG-136(b)(1) Cast iron seats and disks are not permitted.

UG-136(b)(2) Adjacent sliding surfaces such as guides and disks or disk holders shall both be of corrosion resistant material. Springs of corrosion resistant material or having a corrosion resistant coating are required. The seats and disks of pressure relief valves shall be of suitable material to resist corrosion by the fluid to be contained.

NOTE: The degree of corrosion resistance, appropriate to the intended service, shall be a matter of agreement between the manufacturer and the purchaser.

UG-136(b)(3) Materials used in bodies, bonnets or yokes, and body-to-bonnet or body-to-yoke bolting, shall be listed in Section II and this Division. Carbon and low alloy steel bodies, bonnets, yokes and bolting subject to in-service temperatures colder than –20°F (–30°C) shall meet the requirements of UCS-66, unless exempted by the following: A05

(a) The coincident ratio defined in Fig. UCS-66.1 is 0.35 or less.

(b) The material(s) is exempted from impact testing per Fig. UCS-66.

UG-136(b)(4) Materials used in all other parts required for the pressure relieving or retaining function shall be A05

(a) listed in Section II; or

(b) listed in ASTM specifications; or

(c) controlled by the Manufacturer of the pressure relief valve by a specification ensuring control of chemical and physical properties and quality at least equivalent to ASTM standards.

UG-136(c) Inspection of Manufacturing and/or Assembly of Pressure Relief Valves

UG-136(c)(1) A Manufacturer or Assembler shall demonstrate to the satisfaction of a representative from an ASME designated organization that his manufacturing, production, and testing facilities and quality control procedures will insure close agreement between the performance of random production samples and the performance of those valves submitted for Capacity Certification.

UG-136(c)(2) Manufacturing, assembly, inspection, and test operations including capacity are subject to inspections at any time by a representative from an ASME designated organization.

UG-136(c)(3) A Manufacturer or Assembler may be granted permission to apply the UV Code Symbol to production pressure relief valves capacity certified in accordance with UG-131 provided the following tests are successfully completed. This permission shall expire on the fifth anniversary of the date it is initially granted. The permission may be extended for 5 year periods if the following tests are successfully repeated within the 6-month period before expiration.

(a) Two sample production pressure relief valves of a size and capacity within the capability of an ASME accepted laboratory shall be selected by a representative from an ASME designated organization.

(b) Operational and capacity tests shall be conducted in the presence of a representative from an ASME designated organization at an ASME accepted laboratory.

The pressure relief valve Manufacturer or Assembler shall be notified of the time of the test and may have representatives present to witness the test. Pressure relief valves having an adjustable blowdown construction shall be adjusted by the Manufacturer or Assembler following successful testing for operation but prior to flow testing so that the blowdown does not exceed 7% of the set pressure or 3 psi (20 kPa), whichever is greater. This adjustment may be made on the flow test facility.

(c) Should any pressure relief valve fail to relieve at or above its certified capacity or should it fail to meet performance requirements of this Division, the test shall be repeated at the rate of two replacement pressure relief valves, selected in accordance with (c)(3)(a) above, for each pressure relief valve that failed.

(d) Failure of any of the replacement pressure relief valves to meet the capacity or the performance requirements of this Division shall be cause for revocation within 60 days of the authorization to use the Code Symbol on that particular type of pressure relief valve. During this period, the Manufacturer or Assembler shall demonstrate the cause of such deficiency and the action taken to guard against future occurrence, and the requirements of (c)(3) above shall apply.

UG-136(c)(4) Use of the Code Symbol Stamp by an Assembler indicates the use of original, unmodified parts in strict accordance with the instructions of the Manufacturer of the pressure relief valve.

(a) An assembler may transfer original and unmodified pressure relief parts produced by the Manufacturer to other Assemblers provided the following conditions are met:

(1) both Assemblers have been granted permission to apply the V or UV Code Symbol to the specific valve type in which the parts are to be used;

(2) the Quality Control System of the Assembler receiving the pressure relief valve parts shall define the controls for the procurement and acceptance of those parts; and

(3) the pressure relief valve parts are appropriately packaged, marked, or sealed by the Manufacturer to ensure that the parts are:

(a) produced by the Manufacturer; and

(b) the parts are original and unmodified.

(b) However, an Assembler may convert original finished parts by machining to another finished part for a specific application under the following conditions:

(1) Conversions shall be specified by the Manufacturer. Drawings and/or written instructions used for part conversion shall be obtained from the Manufacturer and shall include a drawing or description of the converted part before and after machining.

(2) The Assembler's quality control system, as accepted by a representative from an ASME designated organization, must describe in detail the conversion of original parts, provisions for inspection and acceptance, personnel training, and control of current Manufacturer's drawings and/or written instructions.

(3) The Assembler must document each use of a converted part and that the part was used in strict accordance with the instructions of the Manufacturer.

(4) The Assembler must demonstrate to the Manufacturer the ability to perform each type of conversion. The Manufacturer shall document all authorizations granted to perform part conversions. The Manufacturer and Assembler shall maintain a file of such authorizations.

(5) At least annually a review shall be performed by the Manufacturer of an Assembler's system and machining capabilities. The Manufacturer shall document the results of these reviews. A copy of this documentation shall be kept on file by the Assembler. The review results shall be made available to a representative from an ASME designated organization.

UG-136(c)(5) In addition to the requirements of UG-129, the marking shall include the name of the Manufacturer and the final Assembler. The Code Symbol Stamp shall be that of the final Assembler.

NOTE: Within the requirements of UG-136(c) and (d): A *Manufacturer* is defined as a person or organization who is completely responsible for design, material selection, capacity certification, manufacture of all component parts, assembly, testing, sealing, and shipping of pressure relief valves certified under this Division. An *Assembler* is defined as a person or organization who purchases or receives from a Manufacturer or another Assembler the necessary component parts or pressure relief valves and assembles, adjusts, tests, seals, and ships pressure relief valves certified under this Division, at a geographical location other than and using facilities other than those used by the Manufacturer. An Assembler may be organizationally independent of a Manufacturer or may be wholly or partly owned by a Manufacturer.

UG-136(d) Production Testing by Manufacturers and Assemblers

UG-136(d)(1) Each pressure relief valve to which the Code Symbol Stamp is to be applied shall be subjected to the following tests by the Manufacturer or Assembler. A Manufacturer or Assembler shall have a documented program for the application, calibration, and maintenance of gages and instruments used during these tests.

UG-136(d)(2) The primary pressure parts of each pressure relief valve exceeding NPS 1 (DN 25) inlet size or 300 psi (2100 MPa) set pressure where the materials used are either cast or welded shall be tested at a pressure of at least 1.5 times the design pressure of the parts. These tests shall be conducted after all machining operations on the parts have been completed. There shall be no visible sign of leakage.

UG-136(d)(3) The secondary pressure zone of each closed bonnet pressure relief valve exceeding NPS 1 (DN 25) inlet size when such pressure relief valves are designed for discharge to a closed system shall be tested with air or other gas at a pressure of at least 30 psi (200 kPa). There shall be no visible sign of leakage.

UG-136(d)(4) Each pressure relief valve shall be tested to demonstrate its popping or set pressure. Pressure relief valves marked for steam service or having special internal parts for steam service shall be tested with steam, except that pressure relief valves beyond the capability of the production steam test facility either because of size or set pressure may be tested on air. Necessary corrections for differentials in popping pressure between steam and air shall be established by the Manufacturer and applied to the popping point on air. Pressure relief valves marked for gas or vapor may be tested with air. Pressure relief valves marked for liquid service shall be tested with water or other suitable liquid. When a valve is adjusted to correct for service conditions of superimposed back pressure, temperature, or the differential in popping pressure between steam and air, the actual test pressure (cold differential test pressure) shall be marked on the valve per UG-129. Test fixtures and test drums where applicable shall be of adequate size and capacity to ensure that pressure relief valve action is consistent with the stamped set pressure within the tolerances required by UG-134(d).

04 *UG-136(d)(5)* After completion of the tests required by (d)(4) above, a seat tightness test shall be conducted. Unless otherwise designated by a Manufacturer's published pressure relief valve specification or another specification agreed to by the user, the seat tightness test and acceptance criteria shall be in accordance with API 527.

UG-136(d)(6) Testing time on steam pressure relief valves shall be sufficient, depending on size and design, to insure that test results are repeatable and representative of field performance.

UG-136(e) Design Requirements. At the time of the submission of pressure relief valves for capacity certification, or testing in accordance with (c)(3) above, the ASME designated organization has the authority to review the design for conformity with the requirements of UG-136(a) and UG-136(b) and to reject or require modification of designs which do not conform, prior to capacity testing.

UG-136(f) Welding and Other Requirements. All welding, brazing, heat treatment, and nondestructive examination used in the construction of bodies, bonnets, and yokes shall be performed in accordance with the applicable requirements of this Division.

UG-137 MINIMUM REQUIREMENTS FOR RUPTURE DISK DEVICES

UG-137(a) Mechanical Requirements

UG-137(a)(1) The design shall incorporate arrangements necessary to ensure consistent operation and tightness.

UG-137(a)(2) Rupture disk devices having threaded inlet or outlet connections shall be designed to allow for normal installation without damaging the rupture disk.

UG-137(b) Material Selections

UG-137(b)(1) The rupture disk material is not required to conform to a material specification listed in ASME Section II. The rupture disk material shall be controlled by the Manufacturer of the rupture disk device by a specification ensuring the control of material properties.

UG-137(b)(2) Materials used in rupture disk holders and their pressure retaining bolting shall be listed in Section II and this Division. Carbon and low alloy steel holders and bolting subject to in-service temperatures colder than −20°F (−30°C) shall meet the requirements of UCS-66, unless exempted by the following: A05

(a) the coincident ratio defined in Fig. UCS-66.1 is 0.40 or less; and

(b) the material(s) is exempted from impact testing per Fig. UCS-66.

UG-137(b)(3) Materials used in all other parts required for the pressure relieving or retaining function shall be A05

(a) listed in Section II; or

(b) listed in ASTM specifications; or

(c) controlled by the Manufacturer of the rupture disk device by a specification insuring control of chemical and physical properties and quality at least equivalent to ASTM standards.

UG-137(c) Inspection of Manufacturing of Rupture Disk Devices

UG-137(c)(1) A Manufacturer shall demonstrate to the satisfaction of a representative of an ASME designated organization that its manufacturing, production, and testing facilities and quality control procedures will insure close agreement between the performance of random production samples and the performance of those devices submitted for Certification.

UG-137(c)(2) Manufacturing, assembly, inspection, and test operations are subject to inspections at any time by an ASME designee.

UG-137(c)(3) A Manufacturer may be granted permission to apply the UD Code Symbol to production rupture disk devices certified in accordance with UG-131 provided the following tests are successfully completed.

This permission shall expire on the fifth anniversary of the date it is initially granted. The permission may be extended for five year periods if the following tests are successfully repeated within the 6 month period before expiration.

(a) Two production sample rupture disk devices of a size and capacity within the capability of an ASME accepted laboratory shall be selected by a representative of an ASME designated organization.

(b) Burst and flow testing shall be conducted in the presence of a representative of an ASME designated organization at a place which meets the requirements of UG-131(f). The device Manufacturer shall be notified of the time of the test and may have representatives present to witness the test.

(c) Should any device fail to meet or exceed the performance requirements (burst pressure, minimum net flow area, and flow resistance) of UG-127, the test shall be repeated at the rate of two replacement devices, selected and tested in accordance with (c)(3)(a) and (c)(3)(b) above for each device that failed.

(d) Failure of any of the replacement devices to meet the performance requirements of this Division shall be cause for revocation within 60 days of the authorization to use the Code Symbol on that particular type of rupture disk device design. During this period, the Manufacturer shall demonstrate the cause of such deficiency and the action taken to guard against future occurrence, and the requirements of (c)(3) above shall apply.

UG-137(d) Production Testing by Manufacturers

UG-137(d)(1) Each rupture disk device to which the Code Symbol Stamp is to be applied shall be subjected to the following tests by the Manufacturer. The Manufacturer shall have a documented program for the application, calibration, and maintenance of gages and instruments used during these tests.

UG-137(d)(2) The pressure parts of each rupture disk holder exceeding NPS 1 (DN 25) inlet size or 300 psi (2 100 kPa) design pressure where the materials used are either cast or welded shall be tested at a pressure of at least 1.5 times the design pressure of the parts. These tests shall be conducted after all machining operations on the parts have been completed but prior to installation of the rupture disk. There shall be no visible sign of leakage.

UG-137(d)(3) Each lot of rupture disks shall be tested in accordance with one of the following methods. All tests of disks for a given lot shall be made in a holder of the same form and pressure area dimensions as that being used in service. Sample rupture disks, selected from each lot of rupture disks, shall be made from the same material and of the same size as those to be used in service. Test results shall be applicable only to rupture disks used in disk holders supplied by the rupture disk Manufacturer.

(a) At least two sample rupture disks from each lot of rupture disks shall be burst at the specified disk temperature. The marked burst pressure shall be determined so that the sample rupture disk burst pressures are within the burst pressure tolerance specified by UG-127(a)(1).

(b) At least four sample rupture disks, but not less than 5% from each lot of rupture disks, shall be burst at four different temperatures distributed over the applicable temperature range for which the disks will be used. This data shall be used to establish a smooth curve of burst pressure versus temperature for the lot of disks. The burst pressure for each data point shall not deviate from the curve more than the burst pressure tolerance specified in UG-127(a)(1).

The value for the marked burst pressure shall be derived from the curve for a specified temperature.

(c) For prebulged solid metal disks or graphite disks only, at least four sample rupture disks using one size of disk from each lot of material shall be burst at four different temperatures, distributed over the applicable temperature range for which this material will be used. These data shall be used to establish a smooth curve of percent change of burst pressure versus temperature for the lot of material. The acceptance criteria of smooth curve shall be as in (d)(3)(b) above.

At least two disks from each lot of disks, made from this lot of material and of the same size as those to be used, shall be burst at the ambient temperature to establish the room temperature rating of the lot of disks. The percent change shall be used to establish the marked burst pressure at the specified disk temperature for the lot of disks.

UG-137(e) Design Requirements. At the time of the inspection in accordance with (c)(3) above, a representative from an ASME designated organization has the authority to review the design for conformity with the requirements of UG-137(a) and UG-137(b) and to reject or require modification of designs which to not conform, prior to capacity testing.

UG-137(f) Welding and Other Requirements. All welding, brazing, heat treatment, and nondestructive examination used in the construction of rupture disk holders and pressure parts shall be performed in accordance with the applicable requirements of this Division.

vessel and welded in accordance with the same procedure. One reduced-section tension test and two side-bend tests shall be made in accordance with, and shall meet the requirements of QW-150 and QW-160, Section IX.

UW-13 ATTACHMENT DETAILS

(a) Definitions

t_h = nominal thickness of head

t_p = minimum distance from outside surface of flat head to edge of weld preparation measured as shown in Fig. UW-13.2

t_s = nominal thickness of shell

(See UG-27, UG-28, UG-32, UG-34, and other paragraphs for additional definitions.)

(b)(1) Ellipsoidal, torispherical, and other types of formed heads, shall be attached to the shell as illustrated in the applicable Fig. UW-13.1 sketches (a), (b), (c), (d), (e), and (k). The construction shown in sketch (f) may also be used for end heads when the thickness of the shell section of the vessel does not exceed $\frac{5}{8}$ in. (16 mm) [see also (c) below]. Limitations relative to the use of these attachments shall be as given in the sketches and related notes and in Table UW-12. Figure UW-13.1 sketches (g), (h), and (j) are examples of attachment methods which are not permissible.

(2) Formed heads, concave or convex to the pressure, shall have a skirt length not less than that shown in Fig. UW-13.1, using the applicable sketch. Heads that are fitted inside or over a shell shall have a driving fit before welding.

(3) A tapered transition having a length not less than three times the offset between the adjacent surfaces of abutting sections as shown in Fig. UW-13.1 sketches (l) and (m) shall be provided at joints between formed heads and shells that differ in thickness by more than one-fourth the thickness of the thinner section or by more than $\frac{1}{8}$ in. (3 mm), whichever is less. When a taper is required on any formed head thicker than the shell and intended for butt welded attachment [Fig. UW-13.1 sketches (n) and (o)], the skirt shall be long enough so that the required length of taper does not extend beyond the tangent line. When the transition is formed by removing material from the thicker section, the minimum thickness of that section, after the material is removed, shall not be less than that required by UG-23(c). When the transition is formed by adding additional weld metal beyond what would otherwise be the edge of the weld, such additional weld metal buildup shall be subject to the requirements of UW-42. The center line misalignment between shell and head shall be no greater than one-half the difference between the actual shell and head thickness, as illustrated in Fig. UW-13.1 sketches (l), (m), (n), and (o).

(4) Shells and heads may be attached to shells or heads using a butt weld with one plate offset as shown in Fig. UW-13.1 sketch (k). The weld bead may be deposited on the inside of the vessel only when the weld is accessible for inspection after the vessel is completed. The offset shall be smooth and symmetrical and shall not be machined or otherwise reduced in thickness. There shall be a uniform force fit with the mating section at the root of the weld. Should the offset contain a longitudinal joint the following shall apply.

(a) The longitudinal weld within the area of the offset shall be ground substantially flush with the parent metal prior to the offsetting operation.

(b) The longitudinal weld from the edge of the plate through the offset shall be examined by the magnetic particle method after the offsetting operation. Cracks and cracklike defects are unacceptable and shall be repaired or removed.

(c) As an acceptable alternative to magnetic particle examination or when magnetic particle methods are not feasible because of the nonmagnetic character of the weld deposit, a liquid penetrant method shall be used. Cracks and cracklike defects are unacceptable and shall be repaired or removed.

(5) Bolting flanges shall be attached to formed heads as illustrated in Fig. 1-6. A05

(c)(1) Intermediate heads, without limit to thickness, of the type shown in Fig. UW-13.1 sketch (f) may be used for all types of vessels provided that the outside diameter of the head skirt is a close fit inside the overlapping ends of the adjacent length of cylinder.

(2) The butt weld and fillet weld shall be designed to take shear based on $1\frac{1}{2}$ times the maximum differential pressure that can exist. The allowable stress value for the butt weld shall be 70% of the stress value for the vessel material and that of the fillet 55%. The area of the butt weld in shear is the width at the root of the weld times the length of weld. The area of the fillet weld is the minimum leg dimension times the length of weld. The fillet weld may be omitted if the construction precludes access to make the weld, and the vessel is in noncorrosive service.

(d) The requirements for the attachment of welded unstayed flat heads to shells are given in UG-34 and in (e) and (f) hereunder.

(e) When shells, heads, or other pressure parts are welded to a forged or rolled plate to form a corner joint, as in Fig. UW-13.2, the joint shall meet the following requirements [see also UG-93(d)(3)].

(1) On the cross section through the welded joint, the line of fusion between the weld metal and the forged or rolled plate being attached shall be projected on planes

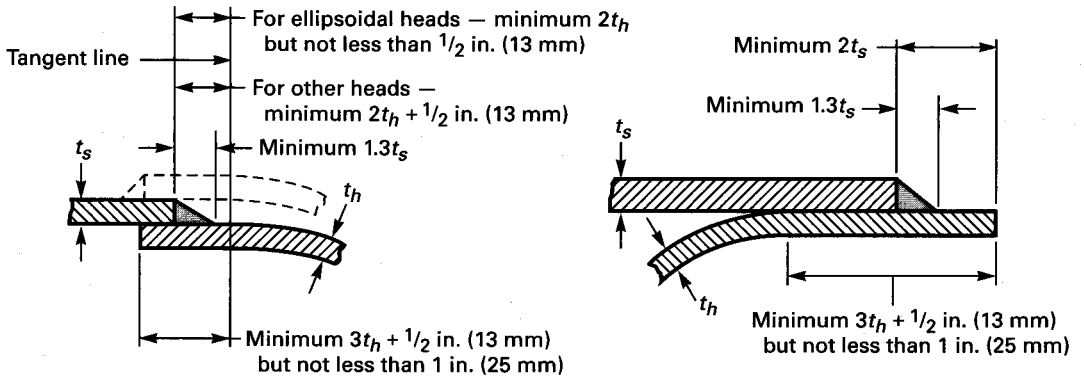

(a) Single Fillet Lap Weld

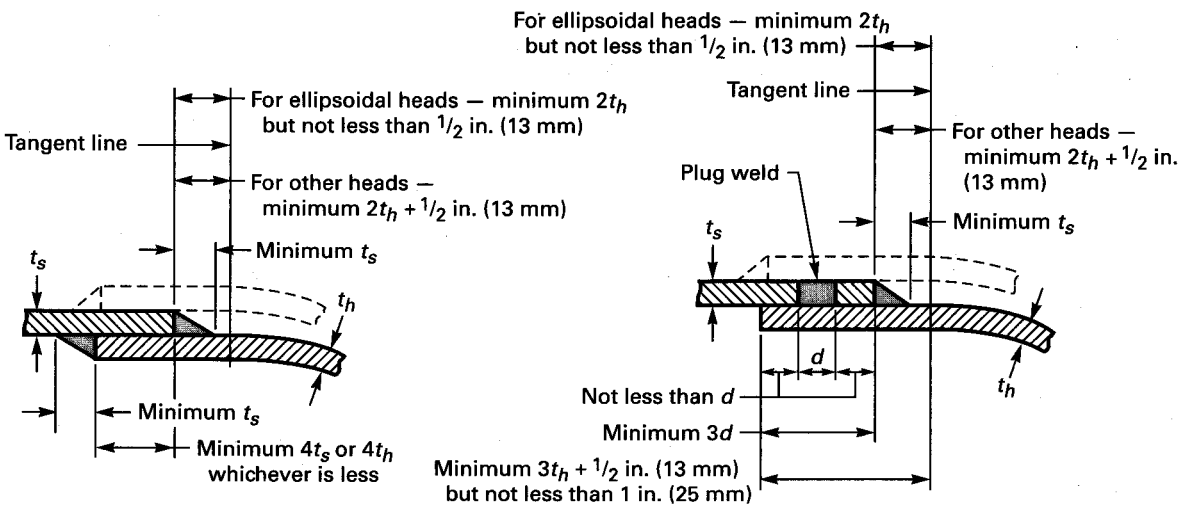

(b) Double Fillet Lap Weld

(c) Single Fillet Lap Weld With Plug Welds

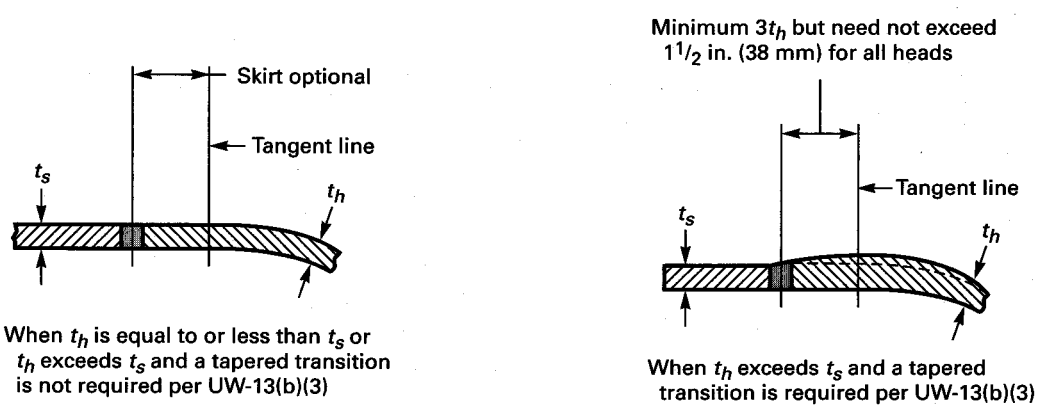

(d) Butt Weld

FIG. UW-13.1 HEADS ATTACHED TO SHELLS
(See Table UW-12 for Limitations)

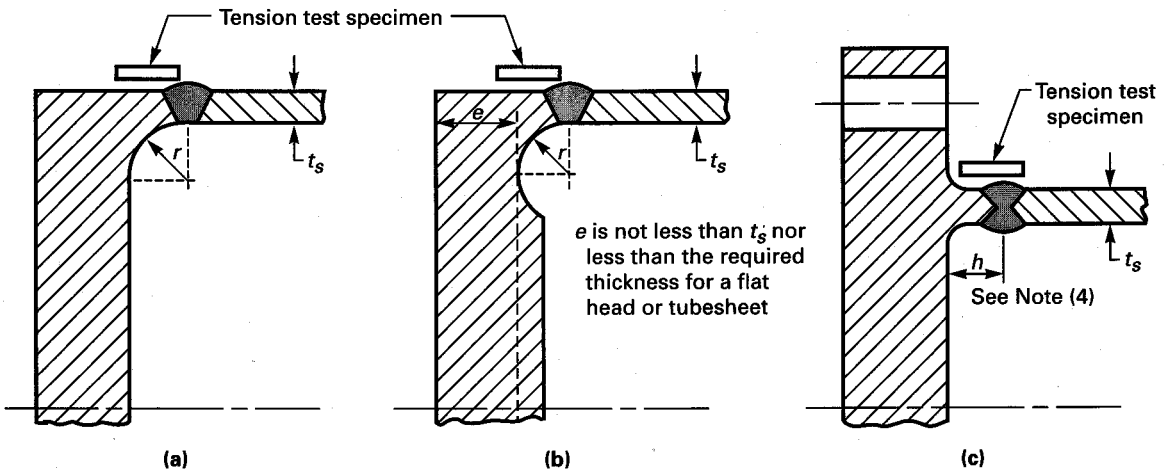

NOTES:
(1) Refer to Fig. UG-34 sketch (b-2) for dimensional requirements.
(2) Not permissible if machined from rolled plate unless in accordance with Appendix 20. See UW-13(f).
(3) Tension test specimen may be located inside or outside the hub.
(4) h is the greater of $^3/_4$ in. (19 mm) or $1.5t_s$, but need not exceed 2 in. (50 mm).

FIG. UW-13.3 TYPICAL PRESSURE PARTS WITH BUTT WELDED HUBS

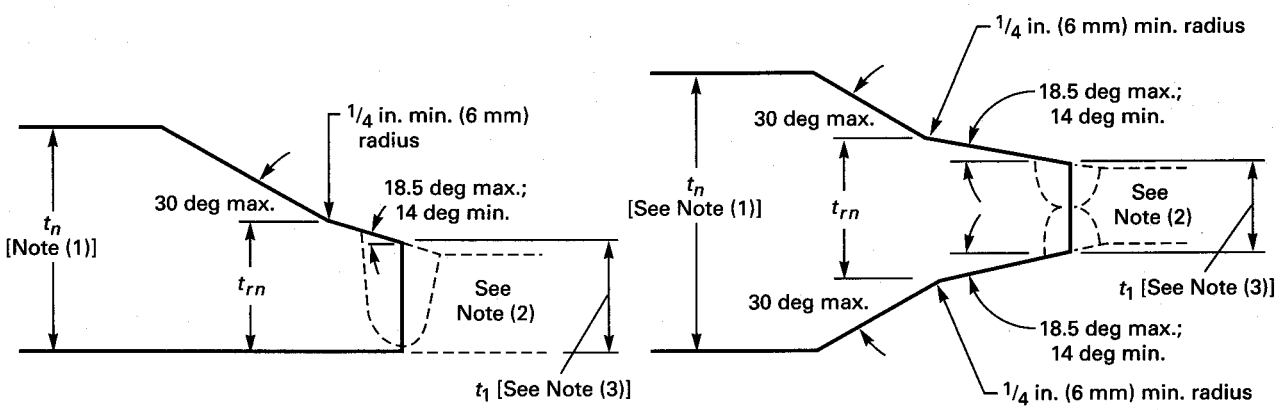

NOTES:
(1) As defined in UG-40.
(2) Weld bevel is shown for illustration only.
(3) t_1 is not less than the greater of:
(a) $0.8t_{rn}$ where
t_{rn} = required thickness of seamless nozzle wall
(b) Minimum wall thickness of connecting pipe

FIG. UW-13.4 NOZZLE NECKS ATTACHED TO PIPING OF LESSER WALL THICKNESS

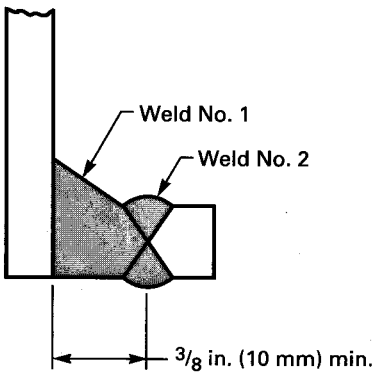

FIG. UW-13.5 FABRICATED LAP JOINT STUB ENDS FOR LETHAL SERVICE

requirements of UG-53 shall be met or the openings shall be reinforced in accordance with UG-37 through UG-42.

UW-14(d) Except when the adjacent butt weld satisfies the requirement for radiography in (b) above, the edge of openings in solid plate meeting the requirements of UG-36(c)(3) shall not be placed closer than ½ in. (13 mm) from the edge of a Category A, B, or C weld for material 1½ in. (38 mm) thick or less.

UW-15 WELDED CONNECTIONS

(a) Nozzles, other connections, and their reinforcements may be attached to pressure vessels by arc or gas welding. Sufficient welding shall be provided on either side of the line through the center of the opening parallel to the longitudinal axis of the shell to develop the strength of the reinforcing parts as prescribed in UG-41 through shear or tension in the weld, whichever is applicable. The strength of groove welds shall be based on the area subjected to shear or to tension. The strength of fillet welds shall be based on the area subjected to shear (computed on the minimum leg dimension.) The inside diameter of a fillet weld shall be used in figuring its length.

(b) Strength calculations for nozzle attachment welds for pressure loading are not required for the following:

(1) Figure UW-16.1 sketches (a), (b), (c), (d), (e), (f-1), (f-2), (f-3), (f-4), (g), (x-1), (y-1), and (z-1), and all the sketches in Figs. UHT-18.1 and UHT-18.2; see L-7.1 and L-7.7;

(2) openings that are exempt from the reinforcement requirements by UG-36(c)(3).

(3) openings designed in accordance with the rules for ligaments in UG-53.

(c) The allowable stress values for groove and fillet welds in percentages of stress values for the vessel material, which are used with UG-41 calculations, are as follows:

Groove-weld tension	74%
Groove-weld shear	60%
Fillet-weld shear	49%

NOTE: These values are obtained by combining the following factors: 87½% for combined end and side loading, 80% for shear strength, and the applicable joint efficiency factors.

UW-15(d) REDESIGNATED UG-37(g) A05

UW-16 MINIMUM REQUIREMENTS FOR ATTACHMENT WELDS AT OPENINGS

(a) General

(1) The terms: nozzles, connections, reinforcements, necks, tubes, fittings, pads, and other similar terms used in this paragraph define essentially the same type construction and form a Category D weld joint between the nozzle (or other term) and the shell, head, etc. as defined in UW-3(a)(4).

(2) The location and minimum size of attachment welds for nozzles and other connections shall conform to the requirements of this paragraph in addition to the strength calculations required in UW-15.

(b) Symbols. The symbols used in this paragraph and in Figs. UW-16.1 and UW-16.2 are defined as follows:

D_o = outside diameter of neck or tube attached by welding on inside of vessel shell only

G = radial clearance between hole in vessel wall and outside diameter of nozzle neck or tube

Radius = ⅛ in. (3 mm) minimum blend radius

r_1 = minimum inside corner radius, the lesser of ¼t or ¾ in. (19 mm)

t = nominal thickness of vessel shell or head,

t_n = nominal thickness of nozzle wall

t_w = dimension of attachment welds (fillet, single-bevel, or single-J), measured as shown in Fig. UW-16.1

t_e = thickness of reinforcing plate, as defined in UG-40

t_{min} = the smaller of ¾ in. (19 mm) or the thickness of the thinner of the parts joined by a fillet, single-bevel, or single-J weld

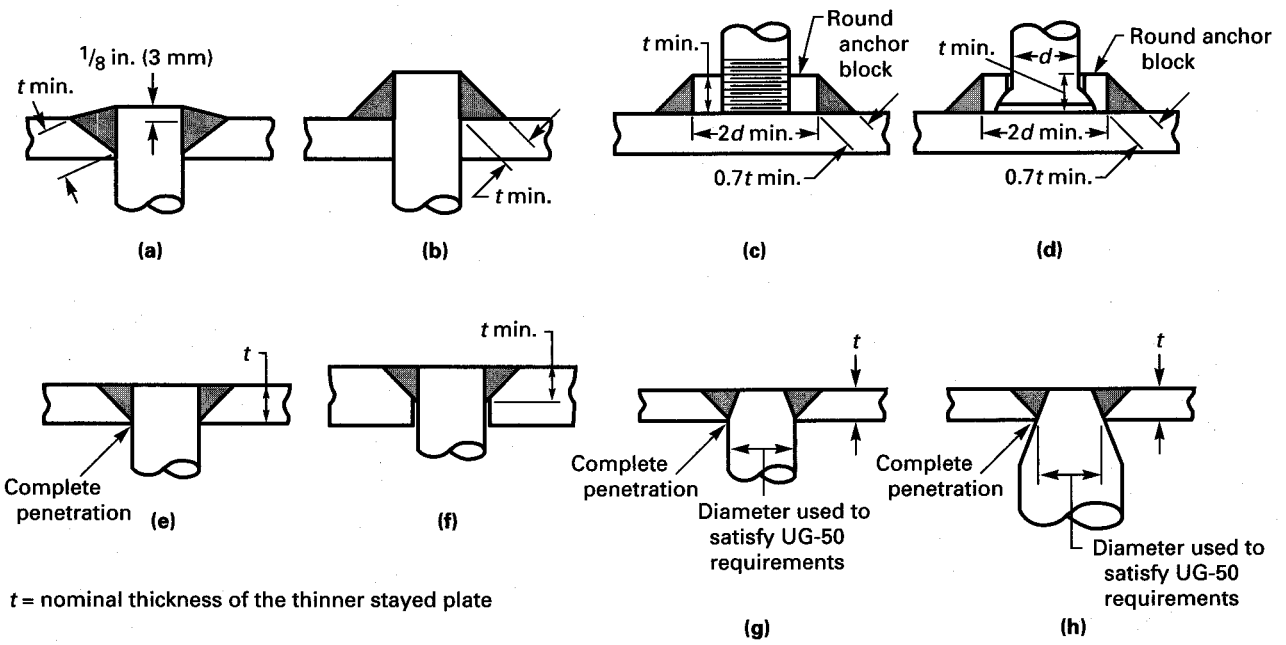

FIG. UW-19.1 TYPICAL FORMS OF WELDED STAYBOLTS

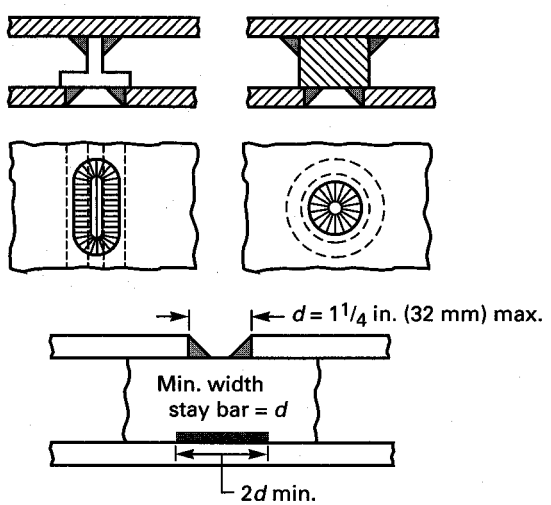

FIG. UW-19.2 USE OF PLUG AND SLOT WELDS FOR STAYING PLATES

(4) the inside welds are properly inspected before the closing plates are attached;

(5) the allowable load on the fillet welds is computed in accordance with UW-18(d);

(6) the maximum diameter or width of the hole in the plate does not exceed $1\frac{1}{4}$ in. (32 mm);

(7) the welders are qualified under the rules of Section IX;

(8) the maximum spacing of stays is determined by the formula in UG-47(a), using $C = 2.1$ if either plate is not over $\frac{7}{16}$ in. (11 mm) thick, $C = 2.2$ if both plates are over $\frac{7}{16}$ in. (11 mm) thick.

(c) Welded stayed construction, consisting of a dimpled or embossed plate welded to another like plate or to a plain plate may be used, provided:

(1) the welded attachment is made by fillet welds around holes or slots as shown in Fig. UW-19.2 or if the thickness of the plate having the hole or slot is $\frac{3}{16}$ in. (5 mm) or less, and the hole is 1 in. (25 mm) or less in diameter, the holes may be completely filled with weld metal. The allowable load on the weld shall equal the product of the thickness of the plate having the hole or slot, the circumference or perimeter of the hole or slot, the allowable stress value in tension of the weaker of the materials being joined and a joint efficiency of 55%;

(2) the maximum allowable working pressure of the dimpled or embossed components is established in accordance with the requirements of UG-101. The joint efficiency, E, used in UG-101 to calculate the MAWP of the dimpled panel shall be taken as 0.80. This proof test may be carried out on a representative panel. If a representative panel is used, it shall be rectangular in shape and at least 5 pitches in each direction, but not less than 24 in. (600 mm) in either direction; 04

(3) the plain plate, if used, shall meet the requirements for braced and stayed surfaces.

(d) The welds need not be radiographed, nor need they be postweld heat treated unless the vessel or vessel part in which they occur is required to be postweld heat treated.

A05 **UW-20 TUBE-TO-TUBESHEET WELDS**

UW-20.1 Scope. These rules provide a basis for establishing weld sizes and allowable joint loads for full strength and partial strength tube-to-tubesheet welds.

UW-20.2 Definitions

UW-20.2(a) Full Strength Weld. A full strength tube-to-tubesheet weld is one in which the design strength is equal to or greater than the maximum allowable axial tube strength. When the weld in a tube-to-tubesheet joint meets the requirements of UW-20.4, it is a full strength weld and the joint does not require qualification by shear load testing. Such a weld also provides tube joint leak tightness.

UW-20.2(b) Partial Strength Weld. A partial strength weld is one in which the design strength is based on the mechanical and thermal axial tube loads (in either direction) that are determined from the actual design conditions. The maximum allowable axial load of this weld may be determined in accordance with UW-20.5, Appendix A, or UW-18(d). When the weld in a tube-to-tubesheet joint meets the requirements of UW-20.5 or UW-18(d), it is a partial strength weld and the joint does not require qualification by shear load testing. Such a weld also provides tube joint leak tightness.

UW-20.2(c) Seal Weld. A tube-to-tubesheet seal weld is one used to supplement an expanded tube joint to ensure leak tightness. Its size has not been determined based on axial tube loading.

UW-20.3 Nomenclature. The symbols described below are used for the design of tube-to-tubesheet welds.

a_c = length of the combined weld legs measured parallel to the longitudinal axis of the tube at its outside diameter
a_f = fillet weld leg
a_g = groove weld leg
a_r = minimum required length of the weld leg(s) under consideration
d_o = tube outside diameter
F_d = design strength, but not greater than F_t
f_d = ratio of the design strength to the tube strength
= 1.0 for full strength welds
= F_d / F_t for partial strength welds
F_f = fillet weld strength, but not greater than F_t
= $0.55\pi a_f (d_o + 0.67a_f) S_w$
f_f = ratio of the fillet weld strength to the design strength
= $1 - F_g / (f_d F_t)$
F_g = groove weld strength, but not greater than F_t
= $0.85\pi a_g (d_o + 0.67a_g) S_w$
F_t = tube strength
= $\pi t (d_o - t) S_a$
f_w = weld strength factor
= S_a / S_w
L_{max} = maximum allowable axial load in either direction on the tube-to-tubesheet joint
t = nominal tube thickness
S = allowable stress value as given in the applicable part of Section II, Part D
S_a = allowable stress in tube (see S, above)
S_t = allowable stress of the material to which the tube is welded (see S, above)
S_w = allowable stress in weld (lesser of S_a or S_t, above)

NOTE: For a welded tube or pipe, use the allowable stress for the equivalent seamless product. When the allowable stress for the equivalent seamless product is not available, divide the allowable stress of the welded product by 0.85.

UW-20.4 Full Strength Welds. Full strength welds shown in Fig. UW-20.1 shall conform to the following requirements.

UW-20.4(a) The size of a full strength weld shall be determined in accordance with UW-20.6.

UW-20.4(b) The maximum allowable axial load in either direction on a tube-to-tubesheet joint with a full strength weld shall be determined as follows.

UW-20.4(b)(1) For loads due to pressure-induced axial forces, $L_{max} = F_t$.

UW-20.4(b)(2) For loads due to thermally-induced or pressure plus thermally-induced axial forces:

UW-20.4(b)(2)(a) $L_{max} = F_t$ for welded only tube-to-tubesheet joints, where the thickness through the weld throat is less than the nominal tube thickness t;

UW-20.4(b)(2)(b) $L_{max} = 2F_t$ for all other welded tube-to-tubesheet joints.

UW-20.5 Partial Strength Welds. Partial strength welds shown in Fig. UW-20.1 shall conform to the following requirements.

UW-20.5(a) The size of a partial strength weld shall be determined in accordance UW-20.6.

UW-20.5(b) The maximum allowable axial load in either direction on a tube-to-tubesheet joint with a partial strength weld shall be determined as follows.

UW-20.5(b)(1) For loads due to pressure-induced axial forces, $L_{max} = F_f + F_g$, but not greater than F_t.

UW-20.5(b)(2) For loads due to thermally-induced or pressure plus thermally-induced axial forces:

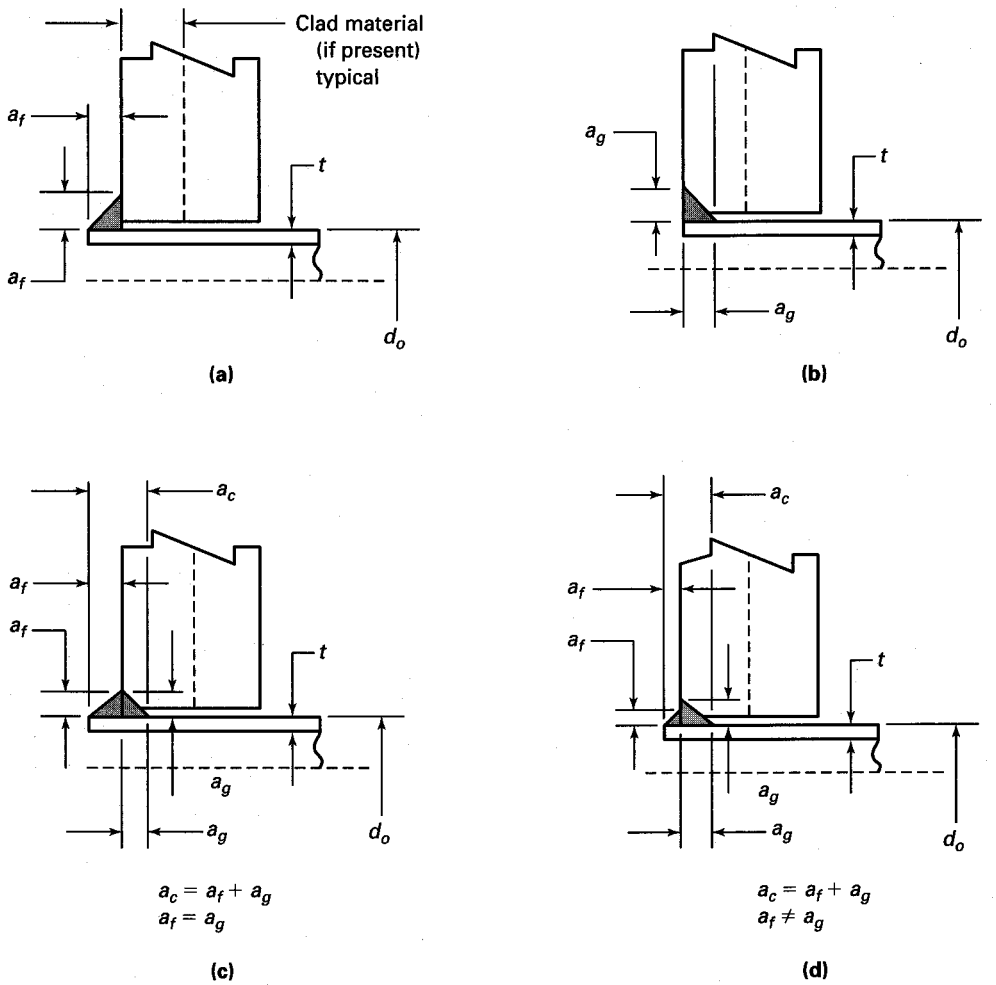

FIG. UW-20.1 SOME ACCEPTABLE TYPES OF TUBE-TO-TUBESHEET STRENGTH WELDS A05

UW-20.5(b)(2)(a) $L_{max} = F_f + F_g$, but not greater than F_t, for welded only tube-to-tubesheet joints, where the thickness through the weld throat is less than the nominal tube thickness t;

UW-20.5(b)(2)(b) $L_{max} = 2(F_f + F_g)$, but not greater than $2F_t$, for all other welded tube-to-tubesheet joints.

UW-20.6 Weld Size Design Formulas. The size of tube-to-tubesheet strength welds shown in Fig. UW-20.1 shall conform to the following requirements.

UW-20.6(a) For fillet welds shown in sketch (a),

$$a_r = \sqrt{(0.75d_o)^2 + 2.73t(d_o - t)f_w f_d} - 0.75d_o$$

UW-20.6(a)(1) For full strength welds, a_f shall not be less than the greater of a_r or t.

UW-20.6(a)(2) For partial strength welds, a_f shall not be less than a_r.

UW-20.6(b) For groove welds shown in sketch (b),

$$a_r = \sqrt{(0.75d_o)^2 + 1.76t(d_o - t)f_w f_d} - 0.75d_o$$

UW-20.6(b)(1) For full strength welds, a_g shall not be less than the greater of a_r or t.

UW-20.6(b)(2) For partial strength welds, a_g shall not be less than a_r.

UW-20.6(c) For combined groove and fillet welds shown in sketch (c), where a_f is equal to a_g,

$$a_r = 2\left[\sqrt{(0.75d_o)^2 + 1.07t(d_o - t)f_w f_d} - 0.75d_o\right]$$

UW-20.6(c)(1) For full strength welds, a_c shall not be less than the greater of a_r or t.

UW-20.6(c)(2) For partial strength welds, a_c shall not be less than a_r.

Calculate a_f and a_g: $a_f = a_c/2$ and $a_g = a_c/2$.

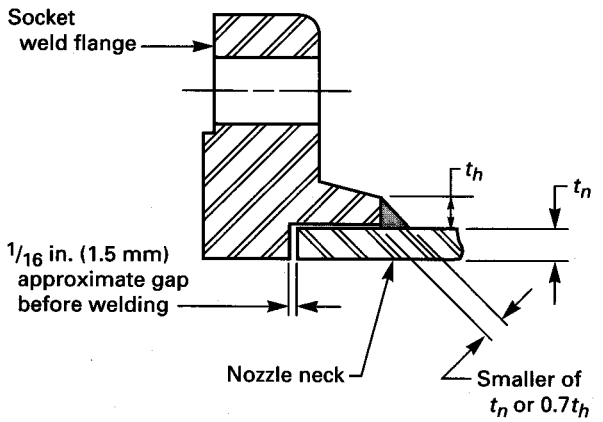

FIG. UW-21 WELDS OF SOCKET WELD FLANGES TO NOZZLE NECKS

UW-20.6(d) For combined groove and fillet welds shown in sketch (d), where a_f is not equal to a_g, a_r shall be determined as follows: Choose a_g. Calculate a_r:

$$a_r = \sqrt{(0.75d_o)^2 + 2.73t(d_o - t)f_w f_d f_f} - 0.75d_o$$

UW-20.6(d)(1) For full strength welds, a_c shall not be less than the greater of $(a_r + a_g)$ or t.

UW-20.6(d)(2) For partial strength welds, a_c shall not be less than $(a_r + a_g)$.

Calculate a_f : $a_f = a_c - a_g$.

UW-21 FLANGE TO NOZZLE NECK WELDS

UW-21(a) ASME B16.5 socket weld flanges shall be welded to a nozzle neck using an external fillet weld. The minimum fillet weld throat dimension shall be the lesser of the nozzle wall thickness or 0.7 times the hub thickness of the socket weld flange. See Fig. UW-21.

UW-21(b) ASME B16.5 slip-on flanges shall be welded to a nozzle neck using an internal and an external fillet weld. The minimum fillet weld throat dimension shall equal 0.7 times the nozzle wall. See Fig. 2-4 sketch (3).

FABRICATION

UW-26 GENERAL

(a) The rules in the following paragraphs apply specifically to the fabrication of pressure vessels and vessel parts that are fabricated by welding and shall be used in conjunction with the general requirements for *Fabrication* in Subsection A, and with the specific requirements for *Fabrication* in Subsection C that pertain to the class of material used.

(b) Each Manufacturer or parts Manufacturer shall be responsible for the quality of the welding done by his organization and shall conduct tests not only of the welding procedure to determine its suitability to ensure welds which will meet the required tests, but also of the welders and welding operators to determine their ability to apply the procedure properly.

(c) No production welding shall be undertaken until after the welding procedures which are to be used have been qualified. Only welders and welding operators who are qualified in accordance with Section IX shall be used in production.

(d) The Manufacturer (Certificate Holder) may engage 04
individuals by contract or agreement for their services as welders[5] at the shop location shown on the Certificate of Authorization and at field sites (if allowed by the Certificate of Authorization) for the construction of pressure vessels or vessel parts, provided all of the following conditions are met.

(1) All Code construction shall be the responsibility of the Manufacturer.

(2) All welding shall be performed in accordance with the Manufacturer's welding procedure specifications in accordance with the requirements of Section IX.

(3) All welders shall be qualified by the Manufacturer in accordance with the requirements of Section IX.

(4) The Manufacturer's Quality Control System shall include as a minimum:

(a) a requirement for complete and exclusive administrative and technical supervision of all welders by the Manufacturer;

(b) evidence of the Manufacturer's authority to assign and remove welders at his discretion without involvement of any other organization;

(c) a requirement for Assignment of Welder Identification symbols;

(d) evidence that this program has been accepted by the Manufacturer's Authorized Inspection Agency which provides the inspection service.

(5) The Manufacturer shall be responsible for Code compliance of the vessel or part, including Code Symbol stamping and providing Data Report Forms properly executed and countersigned by the Inspector.

UW-27 WELDING PROCESSES

(a) The welding processes that may be used in the construction of vessels under this Part of this Division are restricted as follows:

(1) arc welding processes: atomic hydrogen, electrogas, gas metal arc, gas tungsten arc, plasma arc, shielded metal arc, stud, and submerged arc;

[5] *Welder* includes brazer, welding and brazing operator.

TABLE UCS-56
POSTWELD HEAT TREATMENT REQUIREMENTS FOR CARBON AND LOW ALLOY STEELS

A05

Material	Normal Holding Temperature, °F (°C), Minimum	Minimum Holding Time at Normal Temperature for Nominal Thickness [See UW-40(f)]		
		Up to 2 in. (50 mm)	Over 2 in. to 5 in. (50 mm to 125 mm)	Over 5 in. (125 mm)
P-No. 1 Gr. Nos. 1, 2, 3	1100 (595)	1 hr/in. (25 mm), 15 min minimum	2 hr plus 15 min for each additional inch (25 mm) over 2 in. (50 mm)	2 hr plus 15 min for each additional inch (25 mm) over 2 in. (50 mm)
Gr. No. 4	NA	None	None	None

NOTES:

(1) When it is impractical to postweld heat treat at the temperature specified in this Table, it is permissible to carry out the postweld heat treatment at lower temperatures for longer periods of time in accordance with Table UCS-56.1.

(2) Postweld heat treatment is mandatory under the following conditions:

(a) for welded joints over 1½ in. (38 mm) nominal thickness;

(b) for welded joints over 1¼ in. (32 mm) nominal thickness through 1½ in. (38 mm) nominal thickness unless preheat is applied at a minimum temperature of 200°F (95°C) during welding;

(c) for welded joints of all thicknesses if required by UW-2, except postweld heat treatment is not mandatory under the conditions specified below:

(1) for groove welds not over ½ in. (13 mm) size and fillet welds with a throat not over ½ in. (13 mm) that attach nozzle connections that have a finished inside diameter not greater than 2 in. (50 mm), provided the connections do not form ligaments that require an increase in shell or head thickness, and preheat to a minimum temperature of 200°F (95°C) is applied;

(2) for groove welds not over ½ in. (13 mm) in size or fillet welds with a throat thickness of ½ in. (13 mm) or less that attach tubes to a tubesheet when the tube diameter does not exceed 2 in. (50 mm). A preheat of 200°F (95°C) minimum must be applied when the carbon content of the tubesheet exceeds 0.22%.

(3) for groove welds not over ½ in. (13 mm) in size or fillet welds with a throat thickness of ½ in. (13 mm) or less used for attaching nonpressure parts to pressure parts provided preheat to a minimum temperature of 200°F (95°C) is applied when the thickness of the pressure part exceeds 1¼ in. (32 mm);

(4) for studs welded to pressure parts provided preheat to a minimum temperature of 200°F (95°C) is applied when the thickness of the pressure part exceeds 1¼ in. (32 mm);

(5) for corrosion resistant weld metal overlay cladding or for welds attaching corrosion resistant applied lining (see UCL-34) provided preheat to a minimum temperature of 200°F (95°C) is maintained during application of the first layer when the thickness of the pressure part exceeds 1¼ in. (32 mm).

NA = not applicable

TABLE UCS-56
POSTWELD HEAT TREATMENT REQUIREMENTS FOR CARBON AND LOW ALLOY STEELS (CONT'D)

Material	Normal Holding Temperature, °F (°C), Minimum	Minimum Holding Time at Normal Temperature for Nominal Thickness [See UW-40(f)]		
		Up to 2 in. (50 mm)	Over 2 in. to 5 in. (50 mm to 125 mm)	Over 5 in. (125 mm)
P-No. 3 Gr. Nos. 1, 2, 3	1100 (595)	1 hr/in. (25 mm), 15 min minimum	2 hr plus 15 min for each additional -inch (25 mm) over 2 in. (50 mm)	2 hr plus 15 min for each additional inch (25 mm) over 2 in. (50 mm)

NOTES:

(1) When it is impractical to postweld heat treat at the temperatures specified in this Table, it is permissible to carry out the postweld heat treatment at lower temperatures for longer periods of time in accordance with Table UCS-56.1.

(2) Postweld heat treatment is mandatory on P-No. 3 Gr. No. 3 material in all thicknesses.

(3) Except for the exemptions in Note (4), postweld heat treatment is mandatory under the following conditions:

(a) on P-No. 3 Gr. No. 1 and P-No. 3 Gr. No. 2 over $\frac{5}{8}$ in. (16 mm) nominal thickness. For these materials, postweld heat treatment is mandatory on material up to and including $\frac{5}{8}$ in. (16 mm) nominal thickness unless a welding procedure qualification described in UCS-56(a) has been made in equal or greater thickness than the production weld.

(b) on material in all thicknesses if required by UW-2.

(4) For welding connections and attachments to pressure parts, postweld heat treatment is not mandatory under the conditions specified below:

(a) for attaching to pressure parts that have a specified maximum carbon content of not more than 0.25% (SA material specification carbon content, except when further limited by the purchaser to a value within the specification limits) or nonpressure parts with groove welds not over $\frac{1}{2}$ in. (13 mm) in size or fillet welds that have a throat thickness of $\frac{1}{2}$ in. (13 mm) or less, provided preheat to a minimum temperature of 200°F (95°C) is applied;

(b) for circumferential butt welds in pipe or tube where the pipe or tube have both a nominal wall thickness of $\frac{1}{2}$ in. (13 mm) or less and a specified maximum carbon content of not more than 0.25% (SA material specification carbon content, except when further limited by the purchaser to a value within the specification limits);

(c) for studs welded to pressure parts that have a specified maximum carbon content of not more than 0.25% (SA material specification carbon content, except when further limited by the purchaser to a value within the specification limits) provided preheat to a minimum temperature of 200°F (95°C) is applied;

(d) for corrosion resistant weld metal overlay cladding or for welds attaching corrosion resistant applied lining (see UCL-34) when welded to pressure parts which have a specified maximum carbon content of not more than 0.25% (SA material specification carbon content, except when further limited by the purchaser to a value within the specification limits) provided preheat to a minimum temperature of 200°F (95°C) is maintained during application of the first layer.

TABLE UCS-56
POSTWELD HEAT TREATMENT REQUIREMENTS FOR CARBON AND LOW ALLOY STEELS (CONT'D)

04
A05

Material	Normal Holding Temperature, °F (°C), Minimum	Minimum Holding Time at Normal Temperature for Nominal Thickness [See UW-40(f)]
P-No. 10B Gr. No. 1	1100 (595)	1 hr minimum, plus 15 min/in. (25 mm) for thickness over 1 in. (25 mm)

NOTES:

(1) Postweld heat treatment is mandatory for P-No. 10B materials for all thicknesses.

(2) When the heating rate is less than 50°F (28°C)/hr between 800°F (425°C) and the holding temperature, the additional 15 min/in. (25 mm) holding time is not required. Additionally, where the manufacturer can provide evidence that the minimum temperature has been achieved throughout the thickness, the additional 15 min/in. (25 mm) holding time is not required.

Material	Normal Holding Temperature, °F (°C), Minimum	Minimum Holding Time at Normal Temperature for Nominal Thickness [See UW-40(f)]
P-No. 10C Gr. No. 1	1000 (540)	1 hr minimum, plus 15 min/in. (25 mm) for thickness over 1 in. (25 mm)

NOTES:

(1) When it is impractical to postweld heat treat at the temperatures specified in this Table, it is permissible to carry out the postweld heat treatment at lower temperatures for longer periods of time in accordance with Table UCS-56.1.

(2) Except for exemptions in Note (3), postweld heat treatment is mandatory under the following conditions:
- (a) for material over $1\frac{1}{2}$ in. (38 mm) nominal thickness. Postweld heat treatment is mandatory on materials over $1\frac{1}{4}$ in. (32 mm) nominal thickness through $1\frac{1}{2}$ in. (38 mm) nominal thickness unless preheat is applied at a minimum temperature of 200°F (95°C) during welding.
- (b) on material of all thicknesses if required by UW-2.

(3) Postweld heat treatment is not mandatory under the conditions specified below:
- (a) for groove welds not over $\frac{1}{2}$ in. (13 mm) in size and fillet welds with throat not over $\frac{1}{2}$ in. (13 mm) that attach nozzle connections that have a finished inside diameter not greater than 2 in. (50 mm) provided the connections do not form ligaments that require an increase in shell or head thickness and preheat to a minimum temperature of 200°F (95°C) is applied;
- (b) for groove welds not over $\frac{1}{2}$ in. (13 mm) in size or fillet welds having throat thickness of $\frac{1}{2}$ in. (13 mm) or less used for attaching nonpressure parts to pressure parts and preheat to a minimum temperature of 200°F (95°C) is applied when the thickness of the pressure part exceeds $1\frac{1}{4}$ in. (32 mm);
- (c) for studs welded to pressure parts provided preheat to a minimum temperature of 200°F (95°C) is applied when the thickness of the pressure part exceeds $1\frac{1}{4}$ in. (32 mm);
- (d) for corrosion resistant weld metal overlay cladding or for welds attaching corrosion resistant applied lining (see UCL-34) provided preheat to a minimum temperature of 200°F (95°C) is maintained during application of the first layer when the thickness of the pressure part exceeds $1\frac{1}{4}$ in. (32 mm).

(4) When the heating rate is less than 50°F (28°C)/hr between 800°F (425°C) and the holding temperature, the additional 15 min/in. (25 mm) holding time is not required. Additionally, where the manufacturer can provide evidence that the minimum temperature has been achieved throughout the thickness, the additional 15 min/in. (25 mm) holding time is not required.

Material	Normal Holding Temperature, °F (°C), Minimum	Minimum Holding Time at Normal Temperature for Nominal Thickness [See UW-40(f)]
P-No. 10F Gr. No. 1	1000 (540)	1 hr minimum, plus 15 min/in. (25 mm) for thickness over 1 in. (25 mm)

NOTES:

(1) Postweld heat treatment is mandatory for P-No. 10F materials for all thicknesses.

(2) When the heating rate is less than 50°F (28°C)/hr between 800°F (425°C) and the holding temperature, the additional 15 min/in. (25 mm) holding time is not required. Additionally, where the manufacturer can provide evidence that the minimum temperature has been achieved throughout the thickness, the additional 15 min/in. (25 mm) holding time is not required.

TABLE UCS-56.1
ALTERNATIVE POSTWELD HEAT TREATMENT REQUIREMENTS FOR CARBON AND LOW ALLOY STEELS
Applicable Only When Permitted in Table UCS-56

Decrease in Temperature Below Minimum Specified Temperature, °F (°C)	Minimum Holding Time [Note (1)] at Decreased Temperature, hr	Notes
50 (28)	2	...
100 (56)	4	...
150 (83)	10	(2)
200 (111)	20	(2)

NOTES:
(1) Minimum holding time for 1 in. (25 mm) thickness or less. Add 15 minutes per inch (25 mm) of thickness for thicknesses greater than 1 in. (25 mm).
(2) These lower postweld heat treatment temperatures permitted only for P-No. 1 Gr. Nos. 1 and 2 materials.

(austenitizing) heat treatment. For P-No. 1 materials only, the heating and cooling rate restrictions of (d)(2) and (d)(5) below do not apply when the heat treatment following welding is in the austenitizing range.

The materials in Table UCS-56 are listed in accordance with Section IX P-Number material groupings of QW-422 and also listed in Table UCS-23.

(b) Except where prohibited in Table UCS-56, holding temperatures and/or holding times in excess of the minimum values given in Table UCS-56 may be used. Intermediate postweld heat treatments need not conform to the requirements of Table UCS-56. The holding time at temperature as specified in Table UCS-56 need not be continuous. It may be an accumulation of time of multiple postweld heat treatment cycles.

(c) When pressure parts of two different P-Number groups are joined by welding, the postweld heat treatment shall be that specified in either of Tables UCS-56 or UHA-32, with applicable notes, for the material requiring the higher postweld temperature. When nonpressure parts are welded to pressure parts, the postweld heat treatment temperature of the pressure part shall control.

(d) The operation of postweld heat treatment shall be carried out by one of the procedures given in UW-40 in accordance with the following requirements.

(1) The temperature of the furnace shall not exceed 800°F (425°C) at the time the vessel or part is placed in it.

(2) Above 800°F (425°C), the rate[3] of heating shall be not more than 400°F/hr (222°C/hr) divided by the maximum metal thickness of the shell or head plate in inches, but in no case more than 400°F/hr (222°C/hr). During the heating period there shall not be a greater variation in temperature throughout the portion of the vessel being heated than 250°F (139°C) within any 15 ft (4.6 m) interval of length.

(3) The vessel or vessel part shall be held at or above the temperature specified in Table UCS-56 or Table UCS-56.1 for the period of time specified in the Tables. During the holding period, there shall not be a greater difference than 150°F (83°C) between the highest and lowest temperature throughout the portion of the vessel being heated, except where the range is further limited in Table UCS-56.

(4) During the heating and holding periods, the furnace atmosphere shall be so controlled as to avoid excessive oxidation of the surface of the vessel. The furnace shall be of such design as to prevent direct impingement of the flame on the vessel.

(5) Above 800°F (425°C), cooling shall be done in a closed furnace or cooling chamber at a rate[3] not greater than 500°F/hr (278°C) divided by the maximum metal thickness of the shell or head plate in inches, but in no case more than 500°F/hr (278°C). From 800°F (425°C) the vessel may be cooled in still air.

(e) Except as permitted in (f) below, vessels or parts of vessels that have been postweld heat treated in accordance with the requirements of this paragraph shall again be postweld heat treated after welded repairs have been made.

(f) Weld repairs to P-No. 1 Group Nos. 1, 2, and 3 materials and to P-No. 3 Group Nos. 1, 2, and 3 materials and to the weld metals used to join these materials may be made after the final PWHT but prior to the final hydrostatic test, without additional PWHT, provided that PWHT is not required as a service requirement in accordance with UW-2(a), except for the exemptions in Table UCS-56, or as a service requirement in accordance with UCS-68. The welded repairs shall meet the requirements of (1) through (6) below. These requirements do not apply when the welded repairs are minor restorations of the material surface, such as those required after removal of construction fixtures, and provided that the surface is not exposed to the vessel contents.

(1) The Manufacturer shall give prior notification of the repair to the user or to his designated agent and

[3] The rates of heating and cooling need not be less than 100°F/hr (38°C). However, in all cases consideration of closed chambers and complex structures may indicate reduced rates of heating and cooling to avoid structural damage due to excessive thermal gradients.

shall not proceed until acceptance has been obtained. Such repairs shall be recorded on the Data Report.

(2) The total repair depth shall not exceed 1½ in. (38 mm) for P-No. 1 Group Nos. 1, 2, and 3 materials and ⅝ in. (16 mm) for P-No. 3 Group Nos. 1, 2, and 3 materials. The total depth of a weld repair shall be taken as the sum of the depths for repairs made from both sides of a weld at a given location.

(3) After removal of the defect, the groove shall be examined, using either the magnetic particle or the liquid penetrant examination methods, in accordance with Appendix 6 for MT and Appendix 8 for PT.

(4) In addition to the requirements of Section IX for qualification of Welding Procedure Specifications for groove welds, the following requirements shall apply.

A05 *(a)* The weld metal shall be deposited by the manual shielded metal arc process using low hydrogen electrodes. The electrodes shall be properly conditioned in accordance with Section II, Part C, SFA-5.5, Appendix A6.11. The maximum bead width shall be four times the electrode core diameter.

(b) For P-No. 1 Group Nos. 1, 2, and 3 materials, the repair area shall be preheated and maintained at a minimum temperature of 200°F (95°C) during welding.

(c) For P-No. 3 Group Nos. 1, 2, and 3 materials, the repair weld method shall be limited to the half bead weld repair and weld temper bead reinforcement technique. The repair area shall be preheated and maintained at a minimum temperature of 350°F (175°C) during welding. The maximum interpass temperature shall be 450°F (230°C). The initial layer of weld metal shall be deposited over the entire area using ⅛ in. (3 mm) maximum diameter electrodes. Approximately one-half the thickness of this layer shall be removed by grinding before depositing subsequent layers. The subsequent weld layers shall be deposited using 5/32 in. (4 mm) maximum diameter electrodes in such a manner as to assure tempering of the prior weld beads and their heat affected zones. A final temper bead weld shall be applied to a level above the surface being repaired without contacting the base material but close enough to the edge of the underlying weld bead to assure tempering of the base material heat affected zone. After completing all welding, the repair area shall be maintained at a temperature of 400°F–500°F (205°C–260°C) for a minimum period of 4 hr. The final temper bead reinforcement layer shall be removed substantially flush with the surface of the base material.

(5) After the finished repair weld has reached ambient temperature, it shall be inspected using the same nondestructive examination that was used in (f)(3) above, except that for P-No. 3, Group No. 3 materials, the examination shall be made after the material has been at ambient temperature for a minimum period of 48 hr to determine the presence of possible delayed cracking of the weld. If the examination is by the magnetic particle method, only the alternating current yoke type is acceptable. In addition, welded repairs greater than ⅜ in. (10 mm) deep in materials and in welds that are required to be radiographed by the rules of this Division, shall be radiographically examined to the requirements of UW-51.

(6) The vessel shall be hydrostatically tested after making the welded repair.

TABLE UCS-57
THICKNESS ABOVE WHICH FULL RADIOGRAPHIC EXAMINATION OF BUTT WELDED JOINTS IS MANDATORY

P-No. & Gr. No. Classification of Material	Nominal Thickness Above Which Butt Welded Joints Shall Be Fully Radiographed, in. (mm)
1 Gr. 1, 2, 3	1¼ (32)
3 Gr. 1, 2, 3	¾ (19)
4 Gr. 1, 2	⅝ (16)
5A, 5B Gr. 1	0 (0)
9A Gr. 1	⅝ (16)
9B Gr. 1	⅝ (16)
10A Gr. 1	¾ (19)
10B Gr. 2	⅝ (16)
10C Gr. 1	⅝ (16)
10F Gr. 6	¾ (19)

UCS-57 RADIOGRAPHIC EXAMINATION

In addition to the requirements of UW-11, complete radiographic examination is required for each butt welded joint at which the thinner of the plate or vessel wall thicknesses at the welded joint exceeds the thickness limit above which full radiography is required in Table UCS-57.

LOW TEMPERATURE OPERATION

UCS-65 SCOPE

The following paragraphs contain requirements for vessels and vessel parts constructed of carbon and low alloy steels with respect to minimum design metal temperatures.

UCS-66 MATERIALS

(a) Unless exempted by the rules of UG-20(f) or other rules of this Division, Fig. UCS-66 shall be used to establish impact testing exemptions for steels listed in Part UCS. When Fig. UCS-66 is used, impact A05

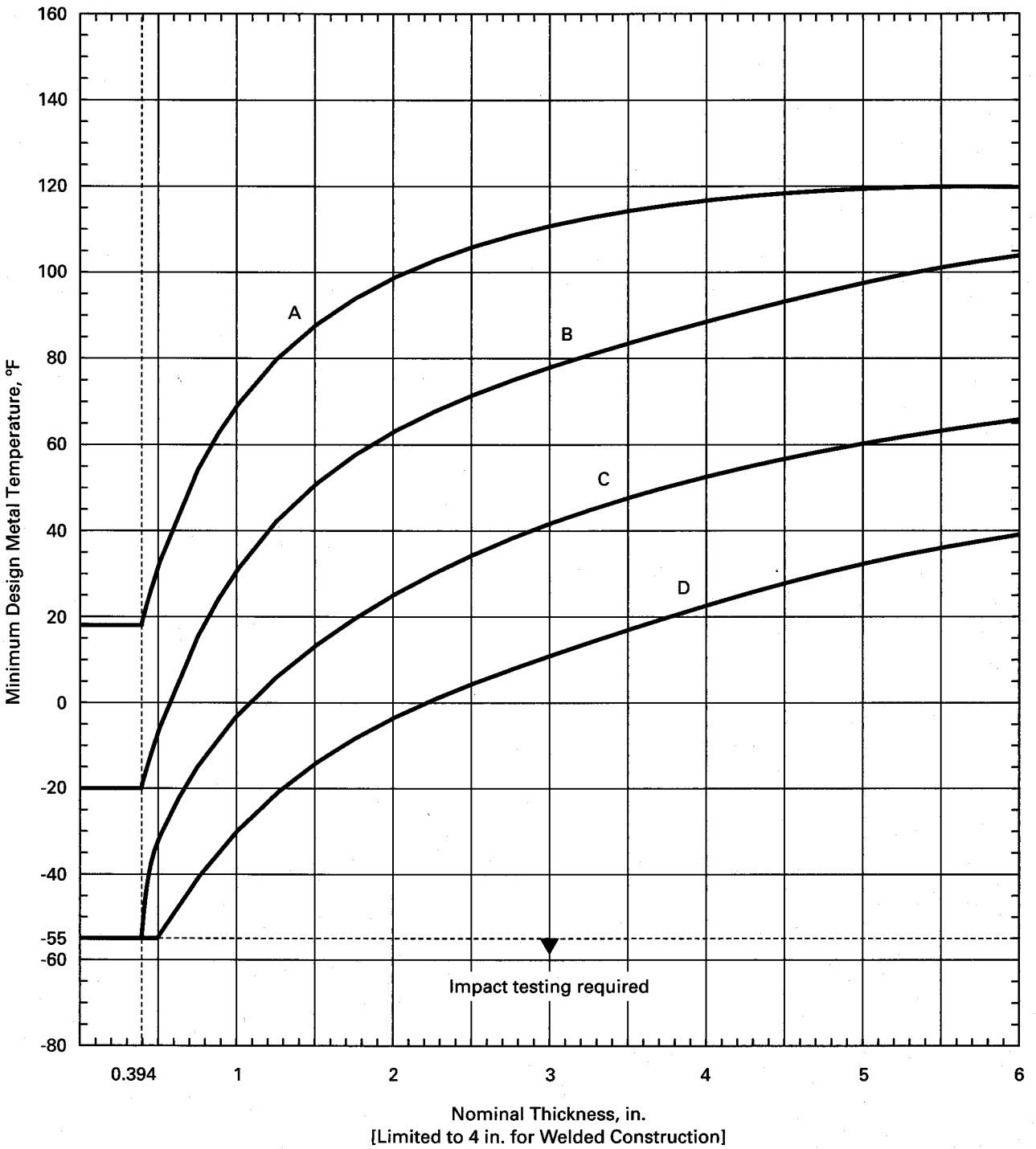

FIG. UCS-66 IMPACT TEST EXEMPTION CURVES [SEE NOTES (1) AND (2)] [SEE UCS-66(a)]

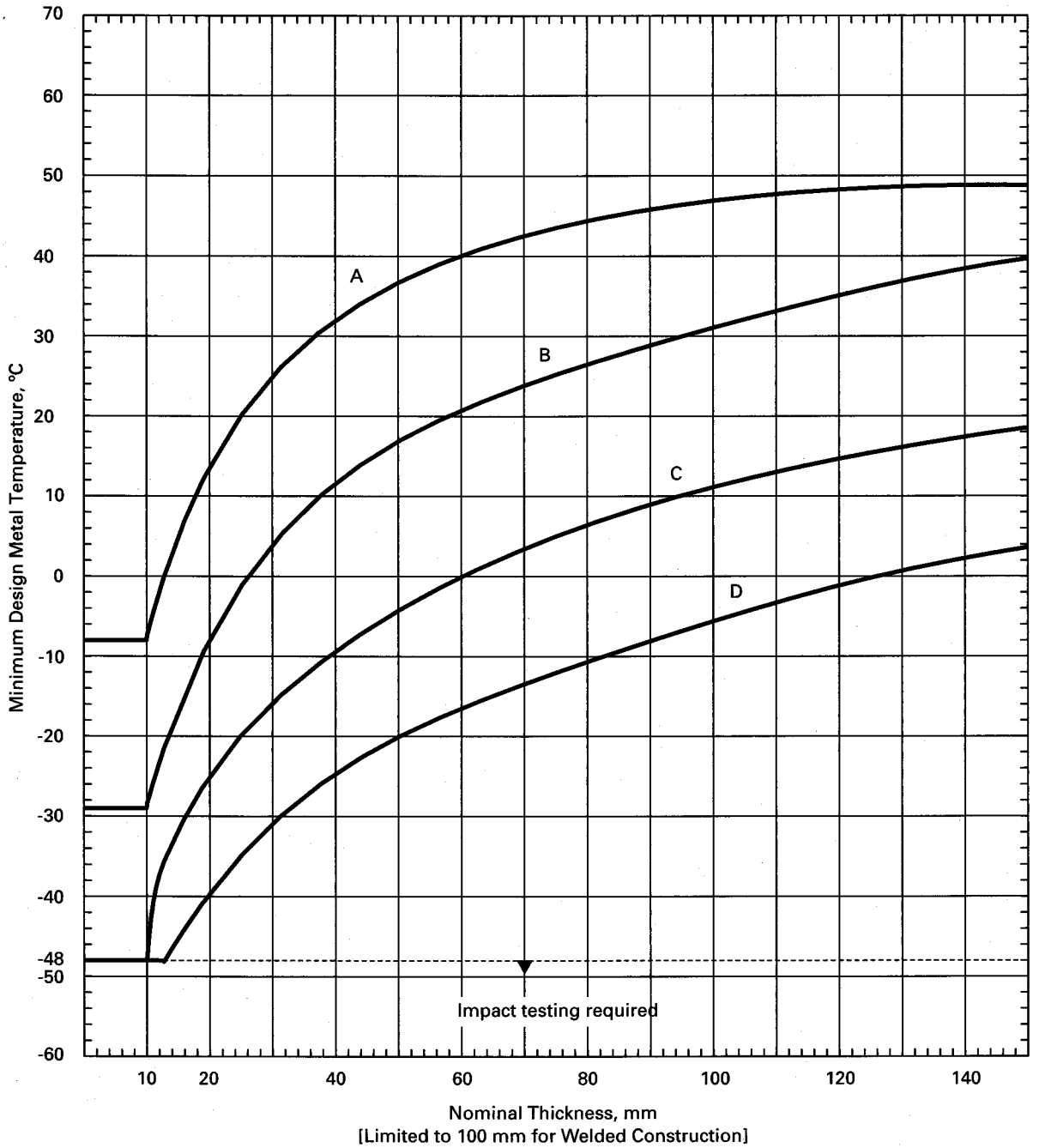

FIG. UCS-66M IMPACT TEST EXEMPTION CURVES [SEE NOTES (1) AND (2)] [SEE UCS-66(a)]

testing is required for a combination of minimum design metal temperature (see UG-20) and thickness (as defined below) which is below the curve assigned to the subject material. If a minimum design metal temperature and thickness combination is on or above the curve, impact testing is not required by the rules of this Division, except as required by (j) below and UCS-67(a)(2) for weld metal.

Components, such as shells, heads, nozzles, manways, reinforcing pads, flanges, tubesheets, flat cover plates, backing strips which remain in place, and attachments which are essential to the structural integrity of the vessel when welded to pressure retaining components, shall be treated as separate components. Each component shall be evaluated for impact test requirements based on its

individual material classification, thickness as defined in (1), (2), or (3) below, and the minimum design metal temperature.

The following thickness limitations apply when using Fig. UCS-66.

(1) Excluding castings, the governing thickness t_g of a welded part is as follows:

(a) for butt joints except those in flat heads and tubesheets, the nominal thickness of the thickest welded joint [see Fig. UCS-66.3 sketch (a)];

(b) for corner, fillet, or lap welded joints, including attachments as defined above, the thinner of the two parts joined;

(c) for flat heads or tubesheets, the larger of (b) above or the flat component thickness divided by 4;

(d) for welded assemblies comprised of more than two components (e.g., nozzle-to-shell joint with reinforcing pad), the governing thickness and permissible minimum design metal temperature of each of the individual welded joints of the assembly shall be determined, and the warmest of the minimum design metal temperatures shall be used as the permissible minimum design metal temperature of the welded assembly. [See Fig. UCS-66.3 sketch (b), L-9.3.1, and L-9.5.2.]

If the governing thickness at any welded joint exceeds 4 in. and the minimum design metal temperature is colder than 120°F (50°C), impact tested material shall be used.

(2) The governing thickness of a casting shall be its largest nominal thickness.

(3) The governing thickness of flat nonwelded parts, such as bolted flanges, tubesheets, and flat heads, is the flat component thickness divided by 4.

(4) The governing thickness of a nonwelded dished head [see Fig. 1-6 sketch (c)] is the greater of the flat flange thickness divided by 4 or the minimum thickness of the dished portion.

(5) If the governing thickness of the nonwelded part exceeds 6 in. (150 mm) and the minimum design metal temperature is colder than 120°F (50°C), impact tested material shall be used.

Examples of the governing thickness for some typical vessel details are shown in Fig. UCS-66.3.

NOTE: The use of provisions in UCS-66 which waive the requirements for impact testing does not provide assurance that all test results for these materials would satisfy the impact energy requirements of UG-84 if tested.

(b) When the coincident ratio defined in Fig. UCS-66.1 is less than one, Fig. UCS-66.1 provides a basis for the use of components made of Part UCS materials to have a colder MDMT than that derived from (a) above without impact testing.

(1)(a) For such components, and for a MDMT of −55°F (−48°C) and warmer, the MDMT without impact testing determined in (a) above for the given material and thickness may be reduced as determined from Fig. UCS-66.2. If the resulting temperature is colder than the required MDMT, impact testing of the material is not required.

(b) Figure UCS-66.1 may also be used for components not stressed in general primary membrane tensile stress, such as flat heads, covers, tubesheets, and flanges (including bolts and nuts). The MDMT of these components without impact testing as determined in UCS-66(a) or (c) may be reduced as determined from Fig. UCS-66.2. The ratio used in Step 3 of Fig. UCS-66.2 shall be the ratio of maximum design pressure at the MDMT to the maximum allowable pressure (MAP) of the component at the MDMT. If the resulting temperature is colder than the required MDMT, impact testing of the material is not required, provided the MDMT is not colder than −55°F (−48°C).

(c) In lieu of using (b)(1)(b) above, the MDMT determined in UCS-66(a) or (c) may be reduced for a flange attached by welding, by the same reduction as determined in (b)(1)(a) above for the neck or shell which the flange is attached.

NOTE: The bolt-up condition need not be considered when determining the temperature reduction for flanges.

(2) For minimum design temperatures colder than −55°F (−48°C), impact testing is required for all materials, except as allowed in (b)(3) below and in UCS-68(c).

(3) When the minimum design metal temperature is colder than −55°F (−48°C) and no colder than −155°F (−105°C), and the coincident ratio defined in Fig. UCS-66.1 is less than or equal to 0.35, impact testing is not required.

(c) No impact testing is required for the following flanges when used at minimum design metal temperatures no colder than −20°F (−29°C):

(1) ASME B16.5 flanges of ferritic steel;

(2) ASME B16.47 flanges of ferritic steel;

(3) split loose flanges of SA-216 GR WCB when the outside diameter and bolting dimensions are either ASME B16.5 Class 150 or Class 300, and the flange thicknesses are not greater than that of either ASME B16.5 Class 150 or Class 300, respectively.

(4) Carbon and Low Alloy Steel Long Weld Neck Flanges. Long weld neck flanges are defined as forged nozzles that meet the dimensional requirements of a flanged fitting given in ASME B16.5 but having a straight hub/neck. The neck inside diameter shall not be less than the nominal size of the flange and the outside diameter

PART UNF
REQUIREMENTS FOR PRESSURE VESSELS CONSTRUCTED OF NONFERROUS MATERIALS

GENERAL

UNF-1 SCOPE

The rules in Part UNF are applicable to pressure vessels and vessel parts that are constructed of nonferrous materials and shall be used in conjunction with the general requirements in Subsection A, and with the specific requirements in Subsection B that pertain to the method of fabrication used.

UNF-3 USES

Some of the uses of nonferrous materials are to resist corrosion, to facilitate cleaning of vessels for processing foods, to provide strength or scaling-resistance at high temperatures, and to provide notch toughness at low temperatures.

UNF-4 CONDITIONS OF SERVICE

Specific chemical compositions, heat-treatment procedures, fabrication requirements, and supplementary tests may be required to assure that the vessel will be in its most favorable condition for the intended service. This is particularly true for vessels subject to severe corrosion. These rules do not indicate the selection of nonferrous material suitable for the intended service or the amount of the corrosion allowance to be provided. It is recommended that users assure themselves by appropriate tests, or otherwise, that the nonferrous material selected will be suitable for the intended service both with respect to corrosion and to retention of satisfactory mechanical properties during the desired service life, taking into account any heating or heat treatment that might be performed during fabrication. See also Appendix A, A-400, of Section II, Part D.

MATERIALS

UNF-5 GENERAL

(a) All nonferrous materials subject to stress due to pressure shall conform to one of the specifications given in Section II and shall be limited to those listed in Tables UNF-23.1 through UNF-23.5 except as otherwise provided in UG-10 and UG-11.

(b) Appendix NF of this Division of Section VIII and the paragraph entitled *Basis of Purchase* and the appendix of the applicable material specification contain information relative to the fabricating characteristics of the material. They are intended to help the manufacturer in ordering the correct material, and in fabricating it, and to help the producer to select the material best able to fulfill the requirements of the fabricating procedures to be used.

UNF-6 NONFERROUS PLATE

Approved specifications for nonferrous plates are given in Tables UNF-23.1 through UNF-23.5. A tabulation of allowable stress values at different temperatures is given in Table 1B of Section II, Part D (see UG-5).

UNF-7 FORGINGS

Approved specifications for nonferrous forgings are given in Tables UNF-23.1 through UNF-23.5. A tabulation of allowable stress values at different temperatures is given in Table 1B of Section II, Part D (see UG-6).

UNF-8 CASTINGS

Approved specifications for nonferrous castings are given in Tables UNF-23.1 through UNF-23.5. A tabulation of allowable stress values at different temperatures is given in Table 1B of Section II, Part D. These stress values are to be multiplied by the casting quality factors of UG-24. Castings that are to be welded shall be of a weldable grade.

UNF-12 BOLT MATERIALS

(a) Approved specifications for bolt materials are given in Tables UNF-23.1 through UNF-23.5. A tabulation of allowable stress values at different temperatures is given in Table 3 of Section II, Part D.

(b) When bolts are machined from heat treated, hot rolled, or cold worked material and are not subsequently hot worked or annealed, the allowable stress values in Table 3 to be used in design shall be based on the condition of the material selected.

(c) When bolts are fabricated by hot-heading, the allowable stress values for annealed material in Table 3 shall apply unless the manufacturer can furnish adequate control data to show that the tensile properties of hot rolled bars or hot finished forgings are being met, in which case the allowable stress values for the material in the hot finished condition may be used.

(d) When bolts are fabricated by cold heading, the allowable stress values for annealed material in Table 3 shall apply unless the manufacturer can furnish adequate control data to show that higher design stresses, as agreed upon, may be used. In no case shall such stresses exceed the allowable stress values given in Table 3 for cold worked bar stock.

(e) Ferrous bolts, studs, and nuts may be used provided they are suitable for the application. They shall conform to the requirements of UCS-10 and 11.

UNF-13 NUTS AND WASHERS

Nuts and washers may be made from any suitable material listed in Tables UNF-23.1 through UNF-23.5. Nuts may be of any dimension or shape provided their strength is equal to that of the bolting, giving due consideration to bolt hole clearance, bearing area, thread form and class of fit, thread shear, and radial thrust from threads [see U-2(g)].

UNF-14 RODS, BARS, AND SHAPES

Rods, bars and shapes shall conform to one of the specifications in Tables UNF-23.1 through UNF-23.5.

UNF-15 OTHER MATERIALS

(a) Other materials, either ferrous or nonferrous, may be used for parts of vessels provided that they are suitable for the purpose intended.

(b) The user shall satisfy himself that the coupling of dissimilar metals will have no harmful effect on the corrosion rate or service life of the vessel for the service intended.

(c) Other materials used in conjunction with nonferrous metals shall meet the requirements given for those materials in other parts of this Division.

DESIGN

UNF-16 GENERAL

The rules in the following paragraphs apply specifically to the design of pressure vessels and vessel parts of nonferrous materials and shall be used in conjunction with the general requirements for *Design* in Subsection A, and with the specific requirements for *Design* in Subsection B that pertain to the method of fabrication used.

UNF-19 WELDED JOINTS 04

(a) For vessels constructed of titanium or zirconium and their alloys, all joints of Categories A and B shall be of Type No. (1) or No. (2) of Table UW-12.

(b) Titanium or zirconium and their alloys shall not be welded to other materials.

(c) For vessels constructed of UNS N06625, all joints of Categories A and B shall be Type No. (1) or No. (2) of Table UW-12. All joints of Categories C and D shall be Type No. (1) or No. (2) of Table UW-12 when the design temperature is 1000°F (540°C) or higher.

(d) For vessels constructed of UNS N12160, the nominal thickness of the base material at the weld shall not exceed 0.5 in. (13 mm). When welding is performed with filler metal of the same nominal composition as the base metal, only GMAW or GTAW processes are allowed and the nominal weld deposit thickness shall not exceed 0.5 in. (13 mm). A05

(e) For vessels constructed of UNS N06230 and when welding is performed with filler metal of the same nominal composition as the base metal, only GMAW or GTAW processes are allowed.

(f) For vessels constructed of UNS R31233 during weld procedure qualification testing, when using a matching filler metal composition, the minimum specified tensile strength of the weld metal shall be 120 ksi (828 MPa). Longitudinal bend tests are permitted per Section IX, QW-160.

UNF-23 MAXIMUM ALLOWABLE STRESS VALUES

(a) Tables 3 (for bolting) and 1B (other materials) in Section II, Part D give the maximum allowable stress values at the temperatures indicated for materials conforming to the specifications listed therein. Values may be interpolated for intermediate temperatures [see UG-23 and UG-31(a)]. For vessels designed to operate at a temperature colder than −20°F (−29°C), the allowable stress values to be used in design shall not exceed those given for temperatures of −20°F to 100°F (−29°C to 38°C).

TABLE UNF-23.1
NONFERROUS METALS — ALUMINUM AND ALUMINUM ALLOY PRODUCTS

Spec. No.	Alloy Designation/UNS No.	Spec. No.	Alloy Designation/UNS No.
SB-26	A02040, A03560, A24430	SB-221	A91060, A91100, A92024, A93003, A95083, A95086, A95154, A95454, A95456, A96061, A96063
SB-108	A02040, A03560	SB-234	Alclad 3003; A91060, A93003, A95052, A95454, A96061
SB-209	Alclad 3003, 3004, 6061; A91060, A91100, A93003, A93004, A95052, A95083, A95086, A95154, A95254, A95454, A95456, A95652, A96061	SB-241	Alclad 3003; A91060, A91100, A93003, A95052, A95083, A95086, A95454,A95456, A96061, A96063
SB-210	Alclad 3003; A91060, A93003, A95052, A95154, A96061, A96063	SB-247	A92014, A93003, A95083, A96061
SB-211	A92014, A92024, A96061	SB-308	A96061

GENERAL NOTE: Maximum allowable stress values in tension for the materials listed in the above table are contained in Subpart 1 of Section II, Part D (see UG-23).

(b) Shells of pressure vessels may be made from welded pipe or tubing listed in Tables UNF-23.1, UNF-23.2, UNF-23.3, UNF-23.4, and UNF-23.5.

(c) When welding or brazing is to be done on material having increased tensile strength produced by hot or cold working, the allowable stress value for the material in the annealed condition shall be used for joint design. One-piece heads and seamless shells may be designed on the basis of the actual temper of the material.

(d) When welding or brazing is to be done on material having increased tensile strength produced by heat treatment, the allowable stress value for the material in the annealed condition shall be used for the joint design unless the stress values for welded construction are given in Table 1B or 3 in Section II, Part D or unless the finished construction is subjected to the same heat treatment as that which produced the temper in the "as-received" material, provided the welded joint and the base metal are similarly affected by the heat treatment.

UNF-28 THICKNESS OF SHELLS UNDER EXTERNAL PRESSURE

(a) Cylindrical and spherical shells under external pressure shall be designed by the rules in UG-28, using the applicable figures in Subpart 3 of Section II, Part D and the temperature limits of UG-20(c).

(b) Examples illustrating the use of the charts in the figures for the design of vessels under external pressure are given in Appendix L.

UNF-30 STIFFENING RINGS

Rules covering the design and attachment of stiffening rings are given in UG-29 and UG-30.

UNF-33 FORMED HEADS, PRESSURE ON CONVEX SIDE

Ellipsoidal, torispherical, hemispherical, and conical heads having pressure on the convex side (minus heads) shall be designed by the rules of UG-33, using figures in Subpart 3 of Section II, Part D having NFA, NFC, NFN, NFT, and NFZ designators. Examples illustrating the application of this paragraph are given in Appendix L.

UNF-56 POSTWELD HEAT TREATMENT

(a) Postweld heat treatment of nonferrous materials is not normally necessary nor desirable.

(b) Except as in (c), (d), and (e) below, no postweld heat treatment shall be performed except by agreement between the user and the Manufacturer. The temperature, time and method of heat treatment shall be covered by agreement.

(c) If welded, castings of SB-148, Alloy CDA 954 shall be heat treated after all welding at 1150°F–1200°F (620°C–650°C) for $1\frac{1}{2}$ hr at temperature for the first inch of cross section thickness plus $\frac{1}{2}$ hr for each additional inch of section thickness. Material shall then be air cooled.

A05

TABLE UNF-23.2
NONFERROUS METALS — COPPER AND COPPER ALLOYS

Spec. No.	UNS No.	Spec. No.	UNS No.
SB-42	C10200, C12000, C12200	SB-171	C36500, C44300, C44400, C44500, C46400, C46500, C61400, C63000, C70600, C71500
SB-43	C23000	SB-187	C10200, C11000
SB-61	C92200	SB-271	C95200
SB-62	C83600	SB-283	C37700, C64200
SB-75	C10200, C12000, C12200, C14200	SB-315	C65500
SB-96	C65500	SB-359	C12200, C44300, C44400, C44500, C70600, C71000, C71500
SB-98	C65100, C65500, C66100	SB-395	C10200, C12000, C12200, C14200, C19200, C23000, C44300, C44400, C44500, C60800, C68700, C70600, C71000, C71500
SB-111	C10200,C12000, C12200, C14200, C19200, C23000, C28000, C44300, C44400, C44500, C60800, C68700, C70400, C70600, C71000, C71500, C72200	SB-466	C70600, C71000, C71500
SB-135	C23000	SB-467	C70600
SB-148	C95200, C95400	SB-543	C12200, C19400, C23000, C44300, C44400, C44500, C68700, C70400, C70600, C71500
SB-150	C61400, C62300, C63000, C64200	SB-584	C92200, C93700, C97600
SB-152	C10200, C10400, C10500, C10700, C11000, C12200, C12300		
SB-169	C61400		

GENERAL NOTE: Maximum allowable stress values in tension for the materials listed in the above table are contained in Subpart 1 of Section II, Part D (see UG-23).

(d) Within 14 days after welding, all products of zirconium Grade R60705 shall be heat treated at 1,000°F–1,100°F (540°C–595°C) for a minimum of 1 hr for thicknesses up to 1 in. (25 mm) plus ½ hr for each additional inch of thickness. Above 800°F (425°C), cooling shall be done in a closed furnace or cooling chamber at a rate not greater than 500°F/hr (278°C/hr) divided by the maximum metal thickness of the shell or head plate in inches but in no case more than 500°F/hr (278°C/hr). From 800°F (425°C), the vessel may be cooled in still air.

(e) Postweld Heat Treatment of UNS Nos. N08800, N08810, and N08811 Alloys

(1) Pressure boundary welds and welds to pressure boundaries in vessels with design temperatures above 1000°F fabricated from UNS No. N08800 (Alloy 800), UNS No. N08810 (Alloy 800H), and UNS No. N08811 (Alloy 800HT) shall be postweld heat treated. The postweld heat treatment shall consist of heating to a minimum temperature of 1,625°F (885°C) for 1½ hr for thicknesses up to 1 in. (25 mm), and for 1½ hr + 1 hr/in. of thickness for thicknesses in excess of 1 in. (25 mm). Cooling and heating rates shall be by agreement between the purchaser and fabricator. As an alternative, solution annealing in accordance with the material specification is acceptable. Postweld heat treatment of tube-to-tubesheet and expansion bellows attachment welds is neither required nor prohibited.

(2) Except as permitted in (3) below, vessels or parts of vessels that have been postweld heat treated in accordance with the requirements of this paragraph shall again be postweld heat treated after welded repairs have been made.

(3) Weld repairs to the weld metal and heat affected zone in welds joining these materials may be made after the final PWHT, but prior to the final hydrostatic test, without additional PWHT. The weld repairs shall meet the requirements of (e)(3)(a) through (e)(3)(d) below.

(a) The Manufacturer shall give prior notification of the repair to the user or to his designated agent and shall not proceed until acceptance has been obtained.

TABLE UNF-23.3
NONFERROUS METALS — NICKEL, COBALT, AND HIGH NICKEL ALLOYS

04
A05

Spec. No.	UNS No.
SA-351	J94651
SA-494	N26022, N30002, N30012
SB-127	N04400
SB-160	N02200, N02201
SB-161	N02200, N02201
SB-162	N02200, N02201
SB-163	N02200, N02201, N04400, N06600, N08120, N08800, N08810, N08811, N08825
SB-164	N04400, N04405
SB-165	N04400
SB-166	N06045, N06600, N06617, N06690
SB-167	N06045, N06600, N06617, N06690
SB-168	N06045, N06600, N06617, N06690
SB-333	N10001, N10629, N10665, N10675
SB-335	N10001, N10629, N10665, N10675
SB-366	N02200, N02201, N04400, N06002, N06007, N06022, N06030, N06045, N06059, N06200, N06230, N06455, N06600, N06625, N06985, N08020, N08031, N08120, N08330, N08367, N08800, N08825, N10001, N10003, N10276, N10629, N10665, N10675, N12160, R20033
SB-407	N08120, N08800, N08810, N08811
SB-408	N08120, N08800, N08810, N08811
SB-409	N08120, N08800, N08810, N08811
SB-423	N08825
SB-424	N08825
SB-425	N08825
SB-434	N10003
SB-435	N06002, N06230, R30556
SB-443	N06625
SB-444	N06625
SB-446	N06625
SB-462	N06022, N06030, N06200, N08020, N08367, N10276, N10665, N10675
SB-463	N08020, N08024, N08026
SB-464	N08020, N08024, N08026
SB-468	N08020, N08024, N08026
SB-473	N08020
SB-511	N08330
SB-514	N08120, N08800, N08810
SB-515	N08120, N08800, N08810, N08811
SB-516	N06045, N06600
SB-517	N06045, N06600
SB-525	N08330
SB-536	N08330
SB-564	N04400, N06022, N06045, N06059, N06200, N06230, N06600, N06617, N06625, N06686, N08031, N08120, N08367, N08800, N08810, N08811, N08825, N10276, N10629, N10675, N12160, R20033
SB-572	N06002, N06230, N12160, R30556
SB-573	N10003
SB-574	N06022, N06030, N06059, N06200, N06455, N06686, N10276
SB-575	N06022, N06059, N06200, N06455, N06686, N10276
SB-581	N06007, N06030, N06975, N06985, N08031
SB-582	N06007, N06030, N06975, N06985
SB-599	N08700
SB-619	N06002, N06007, N06022, N06030, N06059, N06200, N06230, N06455, N06686, N06975, N06985, N08031, N08320, N10001, N10276, N10629, N10665, N10675, R20033, R30556
SB-620	N08320
SB-621	N08320
SB-622	N06002, N06007, N06022, N06030, N06059, N06200, N06230 N06455, N06686, N06975, N06985, N08031, N08320, N10001, N10276, N10629, N10665, N10675, R20033, R30556

04

TABLE UNF-23.3 (CONT'D)
NONFERROUS METALS — NICKEL, COBALT, AND HIGH NICKEL ALLOYS

Spec. No.	UNS No.	Spec. No.	UNS No.
SB-625	N08031, N08904, N08925, R20033	SB-677	N08904, N08925
SB-626	N06002, N06007, N06022, N06030, N06059, N06200, N06230, N06455, N06975, N06985, N08031, N08320, N10001, N10276, N10629, N10665, N10675, N12160, R20033, R30556	SB-688	N08367
		SB-690	N08367
		SB-691	N08367
SB-637	N07718, N07750	SB-704	N06625, N08825
SB-649	N08904, N08925, R20033	SB-705	N06625, N08825
SB-668	N08028	SB-709	N08028
SB-672	N08700	SB-710	N08330
SB-673	N08904, N08925	SB-729	N08020
SB-674	N08904, N08925	SB-804	N08367
SB-675	N08367	SB-815	R31233
SB-676	N08367	SB-818	R31233

GENERAL NOTE: Maximum allowable stress values in tension for the materials listed in the above table are contained in Subpart 1 of Section II, Part D (see UG-23).

TABLE UNF-23.4
NONFERROUS METALS — TITANIUM AND TITANIUM ALLOYS

Spec. No.	UNS No.	Spec. No.	UNS No.
SB-265	R50250, R50400, R50550, R52250, R52252, R52254, R52400, R52402, R52404, R53400, R56320	SB-381	R50250, R50400, R50550, R52400, R52402, R52404, R53400
SB-338	R50250, R50400, R50550, R52400, R52402, R52404, R53400, R56320	SB-861	R50250, R50400, R50550, R52400, R52404, R53400, R56320
SB-348	R50250, R50400, R50550, R52400, R52402, R52404, R53400	SB-862	R50250, R50400, R50550, R52400, R52404, R53400, R56320
SB-363	R50250, R50400, R50550, R52400, R52404, R53400		

GENERAL NOTE: Maximum allowable stress values in tension for the materials listed in the above table are contained in Subpart 1 of Section II, Part D (see UG-23).

(b) The total repair depth shall not exceed $\frac{1}{2}$ in. (13 mm) or 30% of the material thickness, whichever is less. The total depth of a weld repair shall be taken as the sum of the depths for repairs made from both sides of a weld at a given location.

(c) After removal of the defect, the groove shall be examined. The weld repair area must also be examined. The liquid penetrant examination method, in accordance with Appendix 8, shall be used.

(d) The vessel shall be hydrostatically tested after making the welded repair.

(f) Postweld heat treatment of UNS R31233 is required prior to cold forming when the cold forming bend radius at the weld is less than four(4) times the thickness of the component. Postweld treatment shall consist of annealing at 2,050°F (1 121°C) immediately followed by water quenching. 04

PART UHA
REQUIREMENTS FOR PRESSURE VESSELS CONSTRUCTED OF HIGH ALLOY STEEL

GENERAL

UHA-1 SCOPE

The rules in Part UHA are applicable to pressure vessels and vessel parts that are constructed of high alloy steel and shall be used in conjunction with the general requirements in Subsection A, and with the specific requirements in Subsection B that pertain to the method of fabrication used.

UHA-5 USES

Some of the uses of high alloy steel are to resist corrosion, to avoid contamination of contents with iron, to facilitate cleaning of vessels for processing foods, to provide strength or scaling resistance at high temperatures, and to provide impact resistance at low temperatures.

UHA-6 CONDITIONS OF SERVICE

Specific chemical compositions, heat treatment procedures, fabrication requirements, and supplementary tests may be required to assure that the vessel will be in its most favorable condition for the intended service. This is particularly true for vessels subject to severe corrosion. These rules do not indicate the selection of an alloy suitable for the intended service or the amount of the corrosion allowance to be provided.

It is recommended that users assure themselves by appropriate tests, or otherwise, that the high alloy steel selected and its heat treatment during fabrication will be suitable for the intended service both with respect to corrosion resistance and to retention of satisfactory mechanical properties during the desired service life. (See Appendix HA, Suggestions on the Selection and Treatment of Austenitic Chromium–Nickel Steels.)

UHA-8 MATERIAL

(a) Approved specifications for castings of high alloy steel are given in Table UHA-23. A tabulation of allowable stress values at different temperatures is given in Section II, Part D, Table 3 (for bolting) and Table 1A (for other materials). These stress values are to be multiplied by the casting quality factors of UG-24. Castings that are to be welded shall be of weldable grade.

(b) Cast high alloy steel flanges and fittings complying with ASME/ANSI B16.5 shall be used within the ratings assigned in these standards.

MATERIALS

UHA-11 GENERAL

(a) All materials subject to stress due to pressure shall conform to one of the specifications given in Section II, and shall be limited to those listed in Table UHA-23 except as otherwise provided in (b) and UG-4.

(b) The specifications listed in Tables 1A and 3 of Section II, Part D do not use a uniform system for designating the Grade number of materials that have approximately the same range of chemical composition. To provide a uniform system of reference, these tables include a column of UNS (Unified Numbering System) numbers assigned to identify the various alloy compositions. When these particular UNS numbers were assigned, the familiar AISI type numbers for stainless steels were incorporated into the designation. These type numbers are used in the rules of Part UHA whenever reference is made to materials of approximately the same chemical composition that are furnished under more than one approved specification or in more than one product form.

UHA-12 BOLT MATERIALS

(a) Approved specifications for bolt materials of carbon steel and low alloy steel are listed in Table UCS-23 and of high alloy steel in Table UHA-23. A tabulation of allowable stress values at different temperatures (see UG-12) is given in Table 3 of Section II, Part D.

(b) Nonferrous bolts, studs, and nuts may be used provided they are suitable for the application. They shall conform to the requirements of Part UNF.

04
A05

TABLE UHA-23
HIGH ALLOY STEEL

Spec. No.	UNS No.	Type/Grade
SA-182	S20910	FXM-19
	S21904	FXM-11
	S30400	F304
	S30403	F304L
	S30409	F304H
	S30815	F45
	S31000	F310
	S31254	F44
	S31277	...
	S31600	F316
	S31603	F316L
	S31609	F316H
	S31700	F317
	S31703	F317L
	S31803	F51
	S32100	F321
	S32109	F321H
	S32750	...
	S32750	F53
	S34700	F347
	S34709	F347H
	S34800	F348
	S34809	F348H
	S41000	F6a Cl. 1 & 2
	S44627	FXM-27Cb
SA-193	S21800	B8S, B8SA
	S30400	B8 Cl. 1 & 2
	S30451	B8NA Cl. 1A
	S30500	B8P Cl. 1 & 2
	S31600	B8M Cl. 1 & 2, B8M2 Cl. 2
	S31651	B8MNA Cl. 1A
	S32100	B8T Cl. 1 & 2
	S34700	B8C Cl. 1 & 2
	S41000	B6
SA-213	S20910	XM-19
	S30400	TP304
	S30403	TP304L
	S30409	TP304H
	S30451	TP304N
	S30815	...
	S30908	TP309S
	S30909	TP309H
	S30940	TP309Cb
	S31008	TP310S
	S31009	TP310H
	S31040	TP310Cb
	S31050	TP310MoLN
	S31277	...
	S31600	TP316
	S31603	TP316L
	S31609	TP316H
	S31651	TP316N
	S31725	...
	S32100	TP321
	S32109	TP321H
	S34700	TP347
	S34709	TP347H
	S34800	TP348
	S34809	TP348H
	S38100	XM-15
SA-217	J91150	CA15
SA-240	S20100	201-1, 201-2
	S20153	201LN
	S20400	204
	S20910	XM-19
	S24000	XM-29
	S30200	302
	S30400	304
	S30403	304L
	S30409	304H
	S30451	304N
	S30815	...
	S30908	309S
	S30909	309H
	S30940	309Cb
	S31008	310S
	S31009	310H
	S31040	310Cb
	S31050	310MoLN
	S31200	...
	S31254	...
	S31260	...
	S31277	...
	S31600	316
	S31603	316L
	S31609	316H
	S31635	316Ti
	S31640	316Cb
	S31651	316N
	S31700	317
	S31703	317L
	S31725	...
	S31803	...
	S32100	321
	S32109	321H
	S32304	...
	S32550	...
	S32750	...
	S32900	329
	S32950	...
	S34700	347
	S34709	347H
	S34800	348
	S38100	XM-15
	S40500	405
	S40910	...
	S40920	...
	S40930	...
	S41000	410
	S41008	410S
	S42900	429
	S43000	430
	S44000	...
	S44626	XM-33
	S44627	XM-27
	S44635	...
	S44660	26-3-3
	S44700	...
	S44800	...
SA-249	S20910	TPXM-19
	S24000	TPXM-29
	S30400	TP304
	S30403	TP304L
	S30409	TP304H
	S30451	TP304N
	S30815	...
	S30908	TP309S
	S30909	TP309H
	S30940	TP309Cb
	S31008	TP310S
	S31009	TP310H
	S31040	TP310Cb
	S31050	TP310MoLN
	S31254	...
	S31277	...
	S31600	TP316
	S31603	TP316L
	S31609	TP316H
	S31651	TP316N
	S31700	TP317
	S31703	TP317L
	S31725	...
	S32100	TP321
	S32109	TP321H
	S34700	TP347
	S34709	TP347H
	S34800	TP348
	S34809	TP348H
	S38100	TPXM-15
SA-268	S40500	TP405
	S40800	...
	S40900	TP409
	S41000	TP410
	S42900	TP429
	S43000	TP430
	S43035	TP439
	S44400	...
	S44600	TP446-1, TP446-2
	S44626	XM-33
	S44627	XM-27
	S44635	...
	S44660	26-3-3
	S44700	29-4
	S44735	...
	S44800	29-4-2
SA-312	S20910	TPXM-19
	S21904	TPXM-11
	S24000	TPXM-29
	S30400	TP304
	S30403	TP304L

TABLE UHA-23
HIGH ALLOY STEEL (CONT'D)

04
A05

Spec. No.	UNS No.	Type/Grade
	S30409	TP304H
	S30451	TP304N
	S30815	...
	S30908	TP309S
	S30909	TP309H
	S30940	TP309Cb
	S31008	TP310S
	S31009	TP310H
	S31040	TP310Cb
	S31050	TP310MoLN
	S31254	...
	S31277	...
	S31600	TP316
	S31603	TP316L
	S31609	TP316H
	S31651	TP316N
	S31700	TP317
	S31703	TP317L
	S31725	...
	S32100	TP321
	S32109	TP321H
	S34700	TP347
	S34709	TP347H
	S34800	TP348
	S34809	TP348H
	S38100	TPXM-15
SA-320	S30323	B8F Cl. 1, B8FA Cl. 1A
	S30400	B8 Cl. 1 & 2, B8A Cl. 1A
	S31600	B8M Cl. 1 & 2, B8MA Cl. 1A
	S32100	B8T Cl. 1 & 2
	S34700	B8C Cl. 1 & 2, B8CA Cl. 1A
SA-336	S21904	FXM-11
	S30400	F304
	S30403	F304L
	S30409	F304H
	S30451	F304N
	S31000	F310
	S31600	F316
	S31603	F316L
	S31609	F316H
	S31651	F316N
	S32100	F321
	S32109	F321H
	S34700	F347
	S34709	F347H
	S34800	F348
	S34809	F348H
SA-351	J92500	CF3, CF3A
	J92590	CF10
	J92600	CF8, CF8A
	J92710	CF8C
	J92800	CF3M
	J92900	CF8M
	J93000	CG8M
	J93254	CK3MCuN
	J93400	CH8
	J93402	CH20
	J93790	CG6MMN
	J94202	CK20
	...	CT15C
	J94651	CN-3MN
	J95150	CN7M
SA-358	S31254	...
	S31725	...
SA-376	S30400	TP304
	S30409	TP304H
	S30451	TP304N
	S31600	TP316
	S31609	TP316H
	S31651	TP316N
	S31725	...
	S32100	TP321
	S32109	TP321H
	S34700	TP347
	S34709	TP347H
	S34800	TP348
SA-403	S20910	XM-19
	S30400	304
	S30403	304L
	S30409	304H
	S30451	304N
	S30900	309
	S31000	310
	S31600	316
	S31603	316L
	S31609	316H
	S31651	316N
	S31700	317
	S31703	317L
	S32100	321
	S32109	321H
	S34700	347
	S34709	347H
	S34800	348
	S34809	348H
SA-409	S31725	...
SA-430	S30400	FP304
	S30409	FP304H
	S30451	FP304N
	S31600	FP316
	S31609	FP316H
	S31651	FP316N
	S32100	FP321
	S32109	FP321H
	S34700	FP347
	S34709	FP347H
SA-453	S63198	651 Cl. A & B
	S66286	660 Cl. A & B
SA-479	S20910	XM-19
	S24000	XM-29
	S30200	302
	S30400	304
	S30403	304L
	S30409	304H
	S30815	...
	S30908	309S
	S30909	309H
	S30940	309Cb
	S31008	310S
	S31009	310H
	S31040	310Cb
	S31277	...
	S31600	316
	S31603	316L
	S31725	...
	S32109	321H
	S31803	...
	S32100	321
	S32550	...
	S34700	347
	S34800	348
	S40500	405
	S41000	410
	S43000	430
	S43035	439
	S44627	XM-27
	S44700	...
	S44800	...
SA-564	S17400	630
SA-638	S66286	660
SA-666	S20100	201-1, 201-2
	S21904	XM-11
SA-688	S24000	TPXM-29
	S30400	TP304
	S30403	TP304L
	S30451	TP304N
	S31600	TP316
	S31603	TP316L
SA-705	S17400	630

04

TABLE UHA-23
HIGH ALLOY STEEL (CONT'D)

Spec. No.	UNS No.	Type/Grade	Spec. No.	UNS No.	Type/Grade	Spec. No.	UNS No.	Type/Grade
SA-731	S44626	TPXM-33	SA-790	S31260	...	SA-813	S30908	TP309S
	S44627	TPXM-27		S31500	...		S30940	TP309Cb
				S31803	...		S31008	TP310S
SA-747	J92180	CB7Cu-1		S32304	...		S31040	TP310Cb
				S32550	...			
SA-789	S31260	...		S32750	...	SA-814	S30908	TP309S
	S31500	...		S32900	...		S30940	TP309Cb
	S31803	...		S32950	...		S31008	TP310S
	S32304	...					S31040	TP310Cb
	S32550	...	SA-803	S43035	TP439			
	S32750	...		S44660	26-3-3	SA-815	S31803	...
	S32900	...						
	S32950	...				SA-995	J93345	2A

GENERAL NOTE: Maximum allowable stress values in tension for the materials listed in the above table are contained in Subpart 1 of Section II, Part D (see UG-23).

UHA-13 NUTS AND WASHERS

Nuts and washers shall conform to the requirements in UCS-11.

DESIGN

UHA-20 GENERAL

The rules in the following paragraphs apply specifically to the design of pressure vessels and vessel parts that are constructed of high alloy steel and shall be used in conjunction with the general requirements for *Design* in Subsection A, and with the specific requirements for *Design* in Subsection B that pertain to the method of fabrication used.

UHA-21 WELDED JOINTS

When radiographic examination is required for butt welded joints by UHA-33, joints of Categories A and B (see UW-3) shall be of Type Nos. (1) and (2) of Table UW-12.

UHA-23 MAXIMUM ALLOWABLE STRESS VALUES

(a) Tables 3 (for bolting) and 1A (for other materials) of Section II, Part D give the maximum allowable stress values at the temperatures indicated for the materials conforming to the specifications listed therein. Values may be interpolated for intermediate temperatures [see UG-23 and UG-31(a)].

(b) Shells of pressure vessels may be made from welded pipe or tubing listed in Table UHA-23.

(c) For vessels designed to operate at a temperature below −20°F (−30°C), the allowable stress values to be used in design shall not exceed those given in Table 1A or 3 of Section II, Part D for temperatures of −20°F to 100°F (−30°C to 40°C).

UHA-28 THICKNESS OF SHELLS UNDER EXTERNAL PRESSURE

(a) Cylindrical and spherical shells under external pressure shall be designed by the rules in UG-28, using the applicable figures in Subpart 3 of Section II, Part D and the temperature limits of UG-20(c).

(b) Examples illustrating the use of the charts in the figures for the design of vessels under external pressure are given in Appendix L.

UHA-29 STIFFENING RINGS FOR SHELLS UNDER EXTERNAL PRESSURE

Rules covering the design of stiffening rings are given in UG-29. An example illustrating the use of these rules is given in Appendix L.

UHA-30 ATTACHMENT OF STIFFENING RINGS TO SHELL

Rules covering the attachment of stiffening rings are given in UG-30.

UHA-31 FORMED HEADS, PRESSURE ON CONVEX SIDE

Ellipsoidal, torispherical, hemispherical, and conical heads, having pressure on the convex side (minus heads), shall be designed by the rules of UG-33, using the figures for high alloy steels or Fig. CS-2 in Subpart 3 of Section II, Part D. Examples illustrating the application of this paragraph are given in Appendix L.

UHA-32 REQUIREMENTS FOR POSTWELD HEAT TREATMENT

(a) Before applying the detailed requirements and exemptions in these paragraphs, satisfactory weld procedure qualifications of the procedures to be used shall be performed in accordance with all the essential variables of Section IX including conditions of postweld heat treatment or lack of postweld heat treatment and including other restrictions listed below. Welds in pressure vessels or pressure vessel parts shall be given a postweld heat treatment at a temperature not less than specified in Table UHA-32 when the nominal thickness, as defined in UW-40(f), including corrosion allowance, exceeds the limits in the Notes to Table UHA-32. The exemptions provided for in the Notes to Table UHA-32 are not permitted when postweld heat treatment is a service requirement as set forth in UHA-51 and UW-2, when welding ferritic materials greater than $\frac{1}{8}$ in. (3 mm) thick with the electron beam welding process, or when welding P-Nos. 6 and 7 (except for Type 405 and Type 410S) materials of any thickness using the inertia and continuous drive friction welding processes. The materials in Table UHA-32 are listed in accordance with the Section IX P-Number material groupings of QW-432 and are also listed in Table UHA-23.

(b) Holding temperatures and/or holding times in excess of the minimum values given in Table UHA-32 may be used. The holding time at temperature as specified in Table UHA-32 need not be continuous. It may be an accumulation of time of multiple postweld heat treat cycles. Long time exposure to postweld heat treatment temperatures may cause sigma phase formation (see UHA-104).

(c) When pressure parts of two different P-Number groups are joined by welding, the postweld heat treatment shall be that specified in either of Tables UHA-32 or UCS-56, with applicable notes, for the material requiring the higher postweld temperature. When nonpressure parts are welded to pressure parts, the postweld heat treatment temperature of the pressure part shall control. Ferritic steel parts, when used in conjunction with austenitic chromium–nickel stainless steel parts or austenitic/ferritic duplex steel, shall not be subjected to the solution heat treatment described in UHA-105(b).

(d) The operation of postweld heat treatment shall be carried out by one of the procedures given in UW-40 in accordance with the requirements of UCS-56(d) except as modified by the Notes to Table UHA-32.

(e) Vessels or parts of vessels that have been postweld heat treated in accordance with the requirements of this paragraph shall again be postweld heat treated after repairs have been made.

UHA-33 RADIOGRAPHIC EXAMINATION

(a) The requirements for radiographing prescribed in UW-11, UW-51, and UW-52 shall apply in high alloy vessels, except as provided in (b) below. (See UHA-21.)

(b) Butt welded joints in vessels constructed of materials conforming to Type 405 welded with straight chromium electrodes, and to Types 410, 429, and 430 welded with any electrode, shall be radiographed in all thicknesses. The final radiographs of all straight chromium ferritic welds including major repairs to these welds shall be made after postweld heat treatment has been performed.

(c) Butt welded joints in vessels constructed of austenitic chromium–nickel stainless steels which are radiographed because of the thickness requirements of UW-11, or for lesser thicknesses where the joint efficiency reflects the credit for radiographic examination of Table UW-12, shall be radiographed following post heating if such is performed.

UHA-34 LIQUID PENETRANT EXAMINATION

All austenitic chromium–nickel alloy steel and austenitic/ferritic duplex steel welds, both groove and fillet, which exceed a nominal size of $\frac{3}{4}$ in. (19 mm), as defined in UW-40(f), shall be examined for the detection of cracks by the liquid penetrant method. This examination shall be made following heat treatment if heat treatment is performed. All cracks shall be eliminated.

FABRICATION

UHA-40 GENERAL

The rules in the following paragraphs apply specifically to the fabrication of pressure vessels and vessel parts that are constructed of high alloy steel and shall be used in conjunction with the general requirements for *Fabrication* in Subsection A, and with the specific requirements

A05

TABLE UHA-32
POSTWELD HEAT TREATMENT REQUIREMENTS FOR HIGH ALLOY STEELS

Material	Normal Holding Temperature, °F (°C), Minimum	Minimum Holding Time at Normal Temperature for Nominal Thickness [See TF-720(d)]		
		Up to 2 in. (50 mm)	Over 2 in. to 5 in. (50 mm to 125 mm)	Over 5 in. (125 mm)
P-No. 6 Gr. Nos. 1, 2, 3	1400 (760)	1 hr/in. (25 mm), 15 min minimum	2 hr plus 15 min for each additional inch (25 mm) over 2 in. (50 mm)	2 hr plus 15 min for each additional inch (25 mm) over 2 in. (50 mm)

NOTES:

(1) Postweld heat treatment is not required for vessels constructed of Type 410 material for SA-182 Grade F6a, SA-240, SA-268, and SA-479 with carbon content not to exceed 0.08% and welded with electrodes that produce an austenitic chromium–nickel weld deposit or a non-air-hardening nickel–chromium–iron weld deposit, provided the plate thickness at the welded joint does not exceed $\frac{3}{8}$ in. (10 mm), and for thicknesses over $\frac{3}{8}$ in. (10 mm) to $1\frac{1}{2}$ in. (38 mm) provided a preheat of 450°F (230°C) is maintained during welding and that the joints are completely radiographed.

(2) Postweld heat treatment shall be performed as prescribed in UW-40 and UCS-56(e).

Material	Normal Holding Temperature, °F (°C), Minimum	Minimum Holding Time at Normal Temperature for Nominal Thickness [See UHA-32(d)]		
		Up to 2 in. (50 mm)	Over 2 in. to 5 in. (50 mm to 125 mm)	Over 5 in. (125 mm)
P-No. 7 Gr. Nos. 1, 2	1350 (730)	1 hr/in. (25 mm), 15 min minimum	2 hr plus 15 min for each additional inch (25 mm) over 2 in. (50 mm)	2 hr plus 15 min for each additional inch (25 mm) over 2 in. (50 mm)

NOTES:

(1) Postweld heat treatment is not required for vessels constructed of Type 405 or Type 410S materials for SA-240 and SA-268 with carbon content not to exceed 0.08%, welded with electrodes that produce an austenitic–chromium–nickel weld deposit or a non-air-hardening nickel–chromium–iron weld deposit, provided the plate thickness at the welded joint does not exceed $\frac{3}{8}$ in. (10 mm) and for thicknesses over $\frac{3}{8}$ in. (10 mm) to $1\frac{1}{2}$ in. (38 mm) provided a preheat of 450°F (230°C) is maintained during welding and that the joints are completely radiographed.

(2) Postweld heat treatment shall be performed as prescribed in UW-40 and UCS-56(e) except that the cooling rate shall be a maximum of 100°F (56°C)/hr in the range above 1200°F (650°C) after which the cooling rate shall be sufficiently rapid to prevent embrittlement.

(3) Postweld heat treatment is not required for vessels constructed of Grade TP XM-8 material for SA-268 and SA-479 or of Grade TP 18Cr–2Mo for SA-240 and SA-268.

Material	Normal Holding Temperature, °F (°C), Minimum	Minimum Holding Time at Normal Temperature for Nominal Thickness [See UHA-32(d)]		
		Up to 2 in. (50 mm)	Over 2 in. to 5 in. (50 mm to 125 mm)	Over 5 in. (125 mm)
P-No. 8 Gr. Nos. 1, 2, 3, 4	...	...	...	...

NOTE:

(1) Postweld heat treatment is neither required nor prohibited for joints between austenitic stainless steels of the P-No. 8 group. See nonmandatory Appendix HA, UHA-100 to UHA-108, inclusive.

V = volume of the cylindrical process zone prior to forming
$= (\pi/4)(D^2 - d^2)$
$V = V_f$, i.e., forming is a constant volume process
V_f = volume of the cylindrical process zone after forming
$= (\pi/4)(D_f^2 - d_f^2)$

UHA-44(b) When forming strains cannot be calculated as shown in (a) above, the manufacturer shall have the responsibility to determine the maximum forming strain. In such instances, the forming limits for flares, swages, or upsets in Table UHA-44 shall apply.

INSPECTION AND TESTS

UHA-50 GENERAL

The rules in the following paragraphs apply specifically to the inspection and testing of pressure vessels and vessel parts that are constructed of high alloy steel and shall be used in conjunction with the general requirements for *Inspection and Tests* in Subsection A, and with the specific requirements for *Inspection and Tests* in Subsection B that pertain to the method of fabrication used.

UHA-51 IMPACT TESTS

Impact tests, as prescribed in UHA-51(a), shall be performed on materials listed in Table UHA-23 for all combinations of materials and minimum design metal temperatures (MDMT's) except as exempted in UHA-51(d), (e), (f), or (g). Impact tests are not required where the maximum obtainable Charpy specimen has a width along the notch less than 0.099 in. (2.5 mm).

UHA-51(a) Required Impact Testing of Base Metal, Heat-Affected Zones, and Weld Metal

UHA-51(a)(1) Impact test shall be made from sets of three specimens. A set shall be tested from the base metal, a set shall be tested from the heat affected zone, and a set shall be tested from the weld metal. Specimens shall be subjected to the same thermal treatments[1] as the part or vessel which the specimens represent. Test procedures, size, location, and orientation of the specimens shall be the same as required in UG-84.

UHA-51(a)(2) Each of the three specimens tested in each set shall have a lateral expansion opposite the notch not less than 0.015 in. (0.38 mm) for MDMT's of −320°F (−196°C) and warmer.

UHA-51(a)(3) When the MDMT is −320°F (−196°C) and warmer, and the value of lateral expansion for one specimen of a set is less than 0.015 in. (0.38 mm) but not less than 0.010 in. (0.25 mm), a retest of three additional specimens may be made, each of which must equal or exceed 0.015 in. (0.38 mm). Such a retest shall be permitted only when the average value of the three specimens equals or exceeds 0.015 in. (0.38 mm). If the required values are not obtained in the retest or if the values in the initial test are less than minimum required for retest, the material may be reheat treated. After reheat treatment, new sets of specimens shall be made and retested; all specimens must meet the lateral expansion value of 0.015 in. minimum.

UHA-51(a)(4) When the MDMT is colder than −320°F (−196°C), production welding processes shall be limited to shielded metal arc welding (SMAW), gas metal arc welding (GMAW), submerged arc welding (SAW), and gas tungsten arc welding (GTAW). Notch toughness testing shall be performed as specified in (a) or (b) below, as appropriate. A05

(a) If using Type 316L weld filler metal:

(1) each heat of filler metal used in production shall have a Ferrite Number (FN) not greater than 5, as determined by applying the chemical composition from the test weld to Fig. ULT-82; and

(2) notch toughness testing of the base metal, weld metal, and heat affected zone (HAZ) shall be conducted using a test temperature of −320°F (−196°C); and

(3) each of the three specimens from each test set shall have a lateral expansion opposite the notch not less than 0.021 in. (0.53 mm).

(b) If using filler metals other than Type 316L; or when the base metal, weld metal, or filler metal are unable to meet the requirements of (a) above:

(1) notch toughness testing shall be conducted at a test temperature not warmer than MDMT, using the ASTM E 1820 J_{IC} method;

(2) a set of two specimens shall be tested in the TL orientation with a resulting K_{IC} (J) of not less than 120 ksi$\sqrt{\text{in.}}$ (130 ksi$\sqrt{\text{m}}$);

(3) each heat or lot of filler metal used in production shall have a FN not greater than the FN determined for the test weld.

UHA-51(b) Required Impact Testing for Welding Procedure Qualifications. For welded construction the Welding Procedure Qualification shall include impact tests of welds and heat affected zones (HAZ's) made in accordance with UG-84(h) and with the requirements of UHA-51(a), when any of the components[2] of the welded

[1] Thermal treatments of materials are not intended to include warming to temperatures not exceeding 600°F (315°C), thermal cutting, or welding.

[2] Either base metal or weld metal.

TABLE UHA-44
POSTFABRICATION STRAIN LIMITS AND REQUIRED HEAT TREATMENT

Grade	UNS Number	Limitations in Lower Temperature Range: For Design Temperature, °F (°C) Exceeding	Limitations in Lower Temperature Range: For Design Temperature, °F (°C) But Less Than or Equal to	Limitations in Lower Temperature Range: And Forming Strains Exceeding, %	Limitations in Higher Temperature Range: For Design Temperature, °F (°C), Exceeding	Limitations in Higher Temperature Range: And Forming Strains Exceeding, %	Minimum Heat-Treatment Temperature, °F (°C), When Design Temperature and Forming Strain Limits Are Exceeded [Notes (1) and (2)]
201LN	S20153 heads	All	All	All	All	All	1,950 (1 065)
201LN	S20153 all others	All	All	4	All	4	1,950 (1 065)
304	S30400	1,075 (580)	1,250 (675)	20	1,250 (675)	10	1,900 (1 040)
304H	S30409	1,075 (580)	1,250 (675)	20	1,250 (675)	10	1,900 (1 040)
304N	S30451	1,075 (580)	1,250 (675)	15	1,250 (675)	10	1,900 (1 040)
309S	S30908	1,075 (580)	1,250 (675)	20	1,250 (675)	10	2,000 (1 090)
310H	S31009	1,075 (580)	1,250 (675)	20	1,250 (675)	10	2,000 (1 090)
310S	S31008	1,075 (580)	1,250 (675)	20	1,250 (675)	10	2,000 (1 090)
316	S31600	1,075 (580)	1,250 (675)	20	1,250 (675)	10	1,900 (1 040)
316H	S31609	1,075 (580)	1,250 (675)	20	1,250 (675)	10	1,900 (1 040)
316N	S31651	1,075 (580)	1,250 (675)	15	1,250 (675)	10	1,900 (1 040)
321	S32100	1,000 (590)	1,250 (675)	15 [Note (3)]	1,250 (675)	10	1,900 (1 040)
321H	S32109	1,000 (590)	1,250 (675)	15 [Note (3)]	1,250 (675)	10	2,000 (1 090)
347	S34700	1,000 (590)	1,250 (675)	15	1,250 (675)	10	1,900 (1 040)
347H	S34709	1,000 (590)	1,250 (675)	15	1,250 (675)	10	2,000 (1 090)
348	S34800	1,000 (590)	1,250 (675)	15	1,250 (675)	10	1,900 (1 040)
348H	S34809	1,000 (590)	1,250 (675)	15	1,250 (675)	10	2,000 (1 090)

GENERAL NOTES:

(a) The limits shown are for cylinders formed from plates, spherical or dished heads formed from plate, and tube and pipe bends.

(b) For flares, swages, and upsets, the forming strain limits shall be half those tabulated in this Table. When the forming strains cannot be calculated as shown in UHA-44(a), the forming strain limits shall be half those tabulated in this Table [see UHA-44(b)].

NOTES:

(1) Rate of cooling from heat-treatment temperature is not subject to specific control limits.

(2) While minimum heat-treatment temperatures are specified, it is recommended that the heat-treatment temperature range be limited to 150°F (83°C) above that minimum [250°F (139°C) temperature range for 347, 347H, 348, and 348H].

(3) For simple bends of tubes or pipes whose outside diameter is less than 3.5 in. (88 mm), this limit is 20%.

(c) Unless the requirements of (c)(1) and (2) below are met, for 5%, 8%, and 9% nickel steels, the use of nameplates is mandatory for shell thicknesses below ½ in. (13 mm); nameplates are preferred in all thicknesses.

(1) The materials shall be limited to aluminum as follows: SB-209 Alloys 3003, 5083, 5454, and 6061; SB-241 Alloys 3003, 5083, 5086, 5454, 6061, and 6063; and SB-247 Alloys 3003, 5083, and 6061.

(2) The minimum nominal plate thickness shall be 0.249 in. (6.32 mm), or the minimum nominal pipe thickness shall be 0.133 in. (3.38 mm).

PRESSURE RELIEF DEVICES

ULT-125 GENERAL

The provisions of UG-125 through UG-136 shall apply to vessels constructed to this Part; the vessel shall be equipped with a safety relief valve suitable for low temperature service and installed to remain at ambient temperature except when relieving.

04

PART UHX
RULES FOR SHELL-AND-TUBE HEAT EXCHANGERS

UHX-1 SCOPE

The rules in UHX cover the minimum requirements for design, fabrication and inspection of shell-and-tube heat exchangers.

UHX-2 MATERIALS AND METHODS OF FABRICATION

Materials and methods of fabrication of heat exchangers shall be in accordance with Subsections A, B, and C.

UHX-3 TERMINOLOGY

UHX-3.1 U-Tube Heat Exchanger. Heat exchanger with one stationary tubesheet attached to the shell and channel. The heat exchanger contains a bundle of U-tubes attached to the tubesheet [see Fig. UHX-3, sketch (a)].

UHX-3.2 Fixed Tubesheet Heat Exchanger. Heat exchanger with two stationary tubesheets, each attached to the shell and channel. The heat exchanger contains a bundle of straight tubes connecting both tubesheets [see Fig. UHX-3, sketch (b)].

UHX-3.3 Floating Tubesheet Heat Exchanger. Heat exchanger with one stationary tubesheet attached to the shell and channel, and one floating tubesheet that can move axially. The heat exchanger contains a bundle of straight tubes connecting both tubesheets [see Fig. UHX-3, sketch (c)].

UHX-4 DESIGN

UHX-4(a) The design of all components shall be in accordance with the applicable rules of Subsection A, Mandatory Appendices, and this Part.

UHX-4(b) The design of a bolted flat cover where the cover bears against a gasket at the pass partition shall consider the effects of deflection.

UHX-4(c) The design of flanges shall consider the effects of pass partition gasketing in determining the minimum required bolt loads, W_{m1} and W_{m2}, of Appendix 2. When the tubesheet is gasketed between the shell and channel flanges, the shell and channel flange bolt loads are identical and shall be treated as flange pairs in accordance with Appendix 2.

UHX-4(d) Distribution and vapor belts where the shell is not continuous across the belt shall be designed in accordance with UHX-17.

UHX-4(e) Requirements for tubes shall be as follows.

UHX-4(e)(1) The allowable axial tube stresses in fixed and floating tubesheet heat exchangers given in this Part (UHX-13 and UHX-14) supersede the requirements of UG-23.

UHX-4(e)(2) The thickness of U-tubes after forming shall not be less than the design thickness.

UHX-4(f) Rules for U-tube heat exchangers are covered in UHX-12.

UHX-4(g) Rules for fixed tubesheet heat exchangers are covered in UHX-13.

UHX-4(h) Rules for floating tubesheet heat exchangers are covered in UHX-14.

UHX-9 TUBESHEET FLANGED EXTENSION

A05

UHX-9.1 Scope. These rules cover the determination of the required thickness of the tubesheet flanged extension when bolt loads are transmitted to the extended edge of the tubesheet. The required thickness of the extended portion of the tubesheet may differ from that required for the interior of the tubesheet as calculated in UHX-12, UHX-13, or UHX-14.

UHX-9.2 Conditions of Applicability. The general conditions of applicability given in UHX-10 apply.

UHX-9.3 Nomenclature. The following symbols are used for determining the required thickness of the tubesheet flanged extension.

G = diameter of gasket load reaction
= G_c for U-tube tubesheet configuration b
= G_s for U-tube tubesheet configuration e
= G_c for fixed tubesheet configuration b

= G_c for stationary tubesheet configuration b of a floating tubesheet exchanger
= G_s for stationary tubesheet configuration b of a floating tubesheet exchanger
= G_c for floating tubesheet configuration b of a floating tubesheet exchanger
= G_c or G_s for tubesheet configuration d when applicable (e.g., hydrotest)

h_G = gasket moment arm, equal to the radial distance from the centerline of the bolts to the line of the gasket reaction as shown in Table 2-5.2

h_r = minimum required thickness of the tubesheet flanged extension

S = allowable stress for the material of the tubesheet extension at design temperature (operating condition) or atmospheric temperature (gasket seating), as may apply (see UG-23)

W = flange design bolt load. Use Formula 3 and Formula 4 of 2-5(e), and see UHX-4(c).

MAX [(a),(b),(c),...] = greatest of *a, b, c, ...*

UHX-9.4 Design Considerations

UHX-9.4(a) The designer shall consider all conditions (e.g., hydrotest) under which the flanged extension will be used for bolting.

UHX-9.4(b) When the tubesheet is grooved for a peripheral gasket, the net thickness under the groove or between the groove and the outer edge of the tubesheet shall not be less than h_r.

UHX-9.5 Calculation Procedure

UHX-9.5(a) The thickness h_r shall be calculated for both operating and gasket seating conditions, and the greater of the two values shall be used. For operating conditions, the values of S at the design temperature and W from Formula (3) of 2-5(e) shall be used. For gasket seating, the values of S at atmospheric temperature and W from Formula (4) of 2-5(e) shall be used.

UHX-9.5(b) Calculate h_r.

$$h_r = \sqrt{\frac{1.9Wh_G}{SG}}$$

UHX-10 GENERAL CONDITIONS OF APPLICABILITY FOR TUBESHEETS

UHX-10(a) The tubesheet shall be flat and circular. It shall be of uniform thickness, except that the flanged extension may differ in thickness as determined by UHX-9. The tubesheet shall be uniformly perforated over a nominally circular area, in either equilateral triangular or square patterns. However, untubed lanes for pass partitions are permitted. A05

UHX-10(b) The tube side and shell side pressures are assumed to be uniform. These rules do not cover weight loadings or pressure drop.

When these conditions of applicability are not satisfied, see U-2(g).

UHX-11 TUBESHEET CHARACTERISTICS

UHX-11.1 Scope. These rules cover the determination of the ligament efficiencies, effective depth of the tube side pass partition groove, and effective elastic constants to be used in the calculation of U-tube, fixed, and floating tubesheets.

$$\sigma_c = |\sigma_{c,m}| + |\sigma_{c,b}|$$

Configuration a: If $\sigma_s \le 1.5S_s$ and $\sigma_c \le 1.5S_c$, the shell and channel designs are acceptable and the calculation procedure is complete. Otherwise, proceed to Step 11.

Configurations b and c: If $\sigma_s \le 1.5S_s$, the shell design is acceptable and the calculation procedure is complete. Otherwise, proceed to Step 11.

Configurations e and f: If $\sigma_c \le 1.5S_c$, the channel design is acceptable and the calculation procedure is complete. Otherwise, proceed to Step 11.

UHX-12.5.11 Step 11. The design shall be reconsidered. One or a combination of the following three options may be used.

Option 1. Increase the assumed tubesheet thickness h and return to Step 3.

Option 2. Increase the integral shell and/or channel thickness as follows:

Configurations a, b, and c: If $\sigma_s > 1.5S_s$, increase the shell thickness t_s.

Configurations a, e, and f: If $\sigma_c > 1.5S_c$ increase the channel thickness t_c.

If it is necessary to adjust D_s or D_c, return to Step 2; otherwise, return to Step 4.

Option 3. Perform a simplified elastic-plastic calculation for each applicable loading case by using a reduced effective modulus for the integral shell and/or channel to reflect the anticipated load shift resulting from plastic action at the integral shell and/or channel-to-tubesheet junction. This may result in a higher tubesheet bending stress σ. This option shall not be used at temperatures where the time-dependent properties govern the allowable stress.

Configuration a: This option may only be used when $\sigma_s \le S_{PS,s}$ and $\sigma_c \le S_{PS,c}$. In Step 4, if $\sigma_s > 1.5\ S_s$, replace E_s with $E_s^* = E_s\sqrt{1.5S_s/\sigma_s}$ and recalculate k_s and λ_s. If $\sigma_c > 1.5\ S_c$, replace E_c with $E_c^* = E_c\sqrt{1.5S_c/\sigma_c}$ and recalculate k_c and λ_c.

Configurations b and c: This option may only be used when $\sigma_s \le S_{PS,s}$. In Step 4, replace E_s with $E_s^* = E_s\sqrt{1.5S_s/\sigma_s}$ and recalculate k_s and λ_s.

Configurations e and f: This option may only be used when $\sigma_c \le S_{PS,c}$. In Step 4, replace E_c with $E_c^* = E_c\sqrt{1.5S_c/\sigma_c}$ and recalculate k_c and λ_c.

Configurations a, b, c, e, and f: Perform Steps 5 and 7, and recalculate the tubesheet bending stress σ given in Step 8.

If $\sigma \le 2S$, the assumed tubesheet thickness h is acceptable and the design is complete. Otherwise, the design shall be reconsidered by using Option 1 or 2.

UHX-13 RULES FOR THE DESIGN OF FIXED TUBESHEETS

UHX-13.1 Scope. These rules cover the design of tubesheets for fixed tubesheet heat exchangers. The tubesheets may have one of the four configurations shown in Fig. UHX-13.1:

UHX-13.1(a) Configuration a: tubesheet integral with shell and channel;

UHX-13.1(b) Configuration b: tubesheet integral with shell and gasketed with channel, extended as a flange;

UHX-13.1(c) Configuration c: tubesheet integral with shell and gasketed with channel, not extended as a flange;

UHX-13.1(d) Configuration d: tubesheet gasketed with shell and channel.

UHX-13.2 Conditions of Applicability. The two tubesheets shall have the same thickness, material and edge conditions.

UHX-13.3 Nomenclature. The symbols described below are used for the design of the tubesheets. Symbols D_o, E^*, h_g', μ, μ^* and ν^* are defined in UHX-11.

A = outside diameter of tubesheet
a_c = radial channel dimension
Configuration a: $a_c = D_c/2$
Configurations b, c, and d: $a_c = G_c/2$
a_o = equivalent radius of outer tube limit circle
a_s = radial shell dimension
Configurations a, b, and c: $a_s = D_s/2$
Configuration d: $a_s = G_s/2$
C = bolt circle diameter (see Appendix 2)
D_c = inside channel diameter
D_J = inside diameter of the expansion joint at its convolution height
D_s = inside shell diameter
d_t = nominal outside diameter of tubes
E = modulus of elasticity for tubesheet material at T
E_c = modulus of elasticity for channel material at T_c
E_s = modulus of elasticity for shell material at T_s
E_t = modulus of elasticity for tube material at T_t

NOTE: The modulus of elasticity shall be taken from applicable Table TM in Section II, Part D. When a material is not listed in the TM tables, the requirements of U-2(g) shall be applied.

G_1 = midpoint of contact between flange and tubesheet
G_c = diameter of channel gasket load reaction (see Appendix 2)
G_s = diameter of shell gasket load reaction (see Appendix 2)
h = tubesheet thickness
J = ratio of expansion bellows to shell axial rigidity ($J = 1.0$ if no bellows)

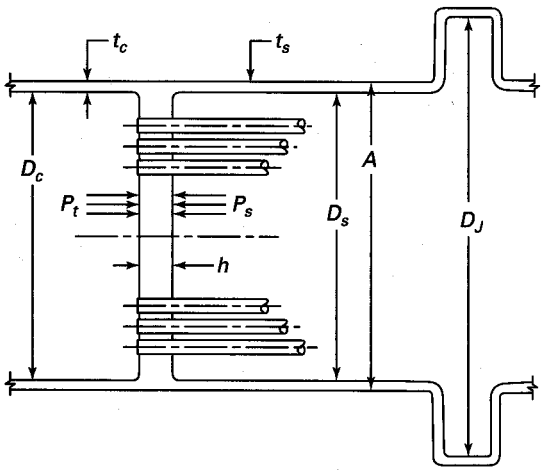

(a) Configuration a:
Tubesheet Integral With Shell and Channel

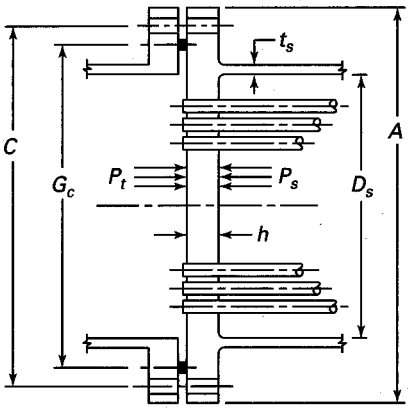

(b) Configuration b:
Tubesheet Integral With Shell and Gasketed With Channel, Extended as a Flange

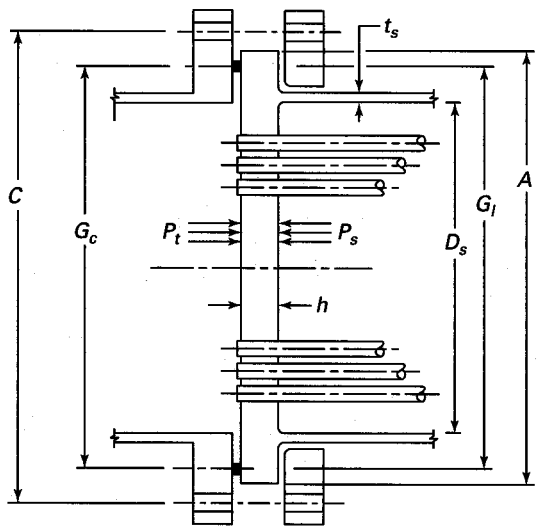

(c) Configuration c:
Tubesheet Integral With Shell and Gasketed With Channel, Not Extended as a Flange

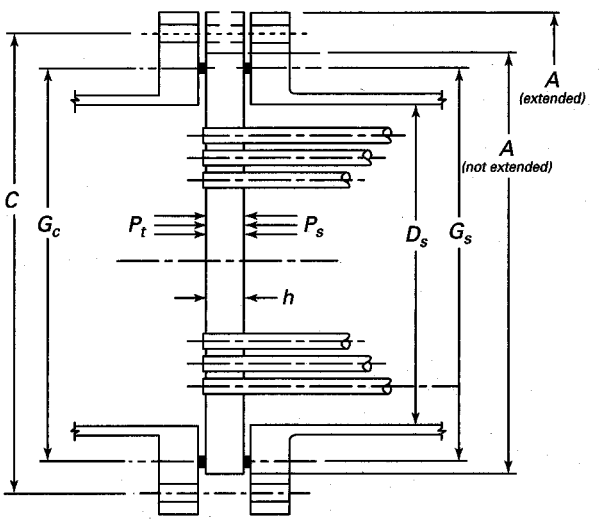

(d) Configuration d:
Tubesheet Gasketed With Shell and Channel

GENERAL NOTE: The expansion joint detail in Configuration a applies to thin-walled and thick-walled expansion joints for Configurations a, b, c, and d.

A05

FIG. UHX-13.1 FIXED TUBESHEET CONFIGURATIONS

K_J = axial rigidity of expansion bellows, total force/elongation

k = constant accounting for the method of support for the unsupported tube span under consideration
= 0.6 for unsupported spans between two tubesheets,
= 0.8 for unsupported spans between a tubesheet and a tube support,
= 1.0 for unsupported spans between two tube supports.

L = tube length between inner tubesheet faces
$= L_t - 2h$

L_t = tube length between outer tubesheet faces

ℓ = unsupported tube span under consideration

$MAX\,[(a),(b),(c),...]$ = greatest of a, b, c,...

N_t = number of tubes

P_e = effective pressure acting on tubesheet

P_s = shell side internal design pressure (see UG-21). For shell side vacuum use a negative value for P_s.

P_t = tube side internal design pressure (see UG-21). For tube side vacuum use a negative value for P_t.

S = allowable stress for tubesheet material at T

S_c = allowable stress for channel material at T_c

S_s = allowable stress for shell material at T_s

S_t = allowable stress for tube material at T_t

NOTE: For a welded tube or pipe, use the allowable stress for the equivalent seamless product. When the allowable stress for the equivalent seamless product is not available, divide the allowable stress of the welded product by 0.85.

S_y = yield strength for tubesheet material at T

$S_{y,c}$ = yield strength for channel material at T_c

$S_{y,s}$ = yield strength for shell material at T_s

$S_{y,t}$ = yield strength for tube material at T_t

NOTE: The yield strength shall be taken from Table Y-1 in Section II, Part D. When a yield strength value is not listed in Table Y-1, one may be obtained by using the procedure in UG-28(c)(2) Step 3.

S_{PS} = allowable primary plus secondary stress for tubesheet material at T per UG-23(e)

$S_{PS,c}$ = allowable primary plus secondary stress for channel material at T_c per UG-23(e)

$S_{PS,s}$ = allowable primary plus secondary stress for shell material at T_s per UG-23(e)

T = tubesheet design temperature

T_a = ambient temperature, 70°F(20°C)

T_c = channel design temperature

T_s = shell design temperature

T_t = tube design temperature

$T_{s,m}$ = mean shell metal temperature along shell length

$T_{t,m}$ = mean tube metal temperature along tube length

t_c = channel thickness

t_s = shell thickness

t_t = nominal tube wall thickness

W = channel flange design bolt load for the gasket seating condition. Use Formula 4 of 2-5(e) and see UHX-4(c).

$\alpha_{s,m}$ = mean coefficient of thermal expansion of shell material at $T_{s,m}$

$\alpha_{t,m}$ = mean coefficient of thermal expansion of tube material at $T_{t,m}$

γ = axial differential thermal expansion between tubes and shell

ν = Poisson's ratio of tubesheet material

ν_c = Poisson's ratio of channel material

ν_s = Poisson's ratio of shell material

ν_t = Poisson's ratio of tube material

UHX-13.4 Design Considerations

UHX-13.4 (a) It is generally not possible to determine, by observation, the most severe condition of coincident pressure, temperature, and differential thermal expansion. Thus, it is necessary to evaluate all the anticipated loading conditions to ensure that the worst load combination has been considered in the design.

The various loading conditions to be considered shall include the normal operating conditions, the startup conditions, the shutdown conditions, and the upset conditions, which may govern the design of the main components of the heat exchanger (i.e., tubesheets, tubes, shell, channel).

For each of these conditions, the following loading cases shall be considered to determine the effective pressure P_e to be used in the design formulas:

UHX-13.4(a)(1) Loading Case 1: Tube side pressure P_t acting only ($P_s = 0$), without differential thermal expansion.

UHX-13.4(a)(2) Loading Case 2: Shell side pressure P_s acting only ($P_t = 0$), without differential thermal expansion.

UHX-13.4(a)(3) Loading Case 3: Tube side pressure P_t and shell side pressure P_s acting simultaneously, without differential thermal expansion.

UHX-13.4(a)(4) Loading Case 4: Differential thermal expansion [see UHX-13.4(f)] acting only ($P_t=0$, $P_s=0$).

UHX-13.4(a)(5) Loading Case 5: Tube side pressure P_t acting only ($P_s=0$), with differential thermal expansion [see UHX-13.4(f)].

UHX-13.4(a)(6) Loading Case 6: Shell side pressure P_s acting only ($P_t=0$), with differential thermal expansion [see UHX-13.4(f)].

UHX-13.4(a)(7) Loading Case 7: Tube side pressure P_t and shell side pressure P_s acting simultaneously, with differential thermal expansion [see UHX-13.4(f)].

When vacuum exists, each loading case shall be considered with and without the vacuum.

When differential pressure design is specified by the user, the design shall be based only on loading cases 3, 4, and 7, as provided by UG-21.

The designer should take appropriate consideration of the stresses resulting from the pressure test required by UG-99 or UG-100 [see UG-99(d)].

UHX-13.4(b) Elastic moduli, yield strengths, and allowable stresses shall be taken at design temperatures. However for cases involving thermal loading (loading cases 4, 5, 6, and 7), it is permitted to use the operating temperatures instead of the design temperatures (see UG-20).

UHX-13.4(c) As the calculation procedure is iterative, a value h shall be assumed for the tubesheet thickness to calculate and check that the maximum stresses in tubesheet, tubes, shell, and channel are within the maximum permissible stress limits.

Because any increase of tubesheet thickness may lead to overstresses in the tubes, shell, or channel, a final check shall be performed, using in the formulas the nominal thickness of tubesheet, tubes, shell, and channel, in both corroded and uncorroded conditions.

UHX-13.4(d) The designer shall consider the effect of deflections in the tubesheet design, especially when the tubesheet thickness h is less than the tube diameter.

UHX-13.4(e) The designer shall consider:

UHX-13.4(e)(1) the integrity of the tube-to-tubesheet joint (see UHX-15).

UHX-13.4(e)(2) the shell column buckling in accordance with UG-23(b).

UHX-13.4(f) The designer shall consider the effect of radial differential thermal expansion between the tubesheet and integral shell or channel (configurations a, b, and c) in accordance with UHX-13.8, if required by UHX-13.8.1.

UHX-13.5 Calculation Procedure. The procedure for the design of tubesheets for a fixed tubesheet heat exchanger is as follows.

UHX-13.5.1 Step 1. Determine D_o, μ, μ^*, and h'_g from UHX-11.5.1.

Loading cases 4, 5, 6, and 7: $h'_g=0$

Calculate a_o, ρ_s, ρ_c, x_s, and x_t.

$$a_o = \frac{D_o}{2}$$

$$\rho_s = \frac{a_s}{a_o}$$

$$\rho_c = \frac{a_c}{a_o}$$

$$x_s = 1 - N_t\left(\frac{d_t}{2a_o}\right)^2$$

$$x_t = 1 - N_t\left(\frac{d_t - 2t_t}{2a_o}\right)^2$$

UHX-13.5.2 Step 2. Calculate the shell axial stiffness K_s, tube axial stiffness K_t, and stiffness factors $K_{s,t}$ and J.

$$K_s = \frac{\pi\, t_s(D_s + t_s)E_s}{L}$$

$$K_t = \frac{\pi\, t_t(d_t - t_t)E_t}{L}$$

$$K_{s,t} = \frac{K_s}{N_t K_t}$$

$$J = \frac{1}{1 + \dfrac{K_s}{K_J}}$$

Calculate shell coefficients β_s, k_s, λ_s, and δ_s.

Configurations a, b, and c:

$$\beta_s = \frac{\sqrt[4]{12(1 - \nu_s^2)}}{\sqrt{(D_s + t_s)\, t_s}}$$

$$k_s = \beta_s \frac{E_s\, t_s^3}{6(1 - \nu_s^2)}$$

$$\lambda_s = \frac{6D_s}{h^3} k_s \left(1 + h\beta_s + \frac{h^2\beta_s^2}{2}\right)$$

$$\delta_s = \frac{D_s^2}{4E_s\, t_s}\left(1 - \frac{\nu_s}{2}\right)$$

Configuration d: $\beta_s=0$, $k_s=0$, $\lambda_s=0$, $\delta_s=0$

Calculate channel coefficients β_c, k_c, λ_c, and δ_c.

Configuration a:

$$\beta_c = \frac{\sqrt[4]{12(1 - \nu_c^2)}}{\sqrt{(D_c + t_c)\, t_c}}$$

$$k_c = \beta_c \frac{E_c\, t_c^3}{6(1 - \nu_c^2)}$$

$$\lambda_c = \frac{6D_c}{h^3} k_c \left(1 + h\beta_c + \frac{h^2\beta_c^2}{2}\right)$$

$$\delta_c = \frac{D_c^2}{4E_c\, t_c}\left(1 - \frac{\nu_c}{2}\right)$$

Configurations b, c, d: $\beta_c = 0$, $k_c = 0$, $\lambda_c = 0$, $\delta_c = 0$

UHX-13.5.3 Step 3. Calculate h/p. If ρ changes, recalculate d^* and μ^* from UHX-11.5.1.

Determine E^*/E and ν^* relative to h/p from UHX-11.5.2.

Calculate X_a.

$$X_a = \left[24(1 - \nu^{*2}) N_t \frac{E_t\, t_t (d_t - t_t) a_o^2}{E^*\, L\, h^3}\right]^{1/4}$$

Using the calculated value of X_a, enter either Table UHX-13.1 or Fig. UHX-13.2 to determine Z_d, Z_v, and Z_m.

UHX-13.5.4 Step 4. Calculate diameter ratio K and coefficient F.

$$K = \frac{A}{D_o}$$

$$F = \frac{1 - \nu^*}{E^*}(\lambda_s + \lambda_c + E \ln K)$$

Calculate Φ, Q_1, Q_{Z1}, Q_{Z2}, and U.

$$\Phi = (1 + \nu^*)F$$

$$Q_1 = \frac{\rho_s - 1 - \Phi Z_v}{1 + \Phi Z_m}$$

$$Q_{Z1} = \frac{(Z_d + Q_1 Z_v) X_a^4}{2}$$

$$Q_{Z2} = \frac{(Z_v + Q_1 Z_m) X_a^4}{2}$$

$$U = \frac{[Z_v + (\rho_s - 1) Z_m] X_a^4}{1 + \Phi Z_m}$$

UHX-13.5.5 Step 5

UHX-13.5.5(a) Calculate γ.

Loading cases 1, 2, and 3: $\gamma = 0$.

Loading cases 4, 5, 6, and 7:

$$\gamma = [\alpha_{t,m}(T_{t,m} - T_a) - \alpha_{s,m}(T_{s,m} - T_a)]L$$

UHX-13.5.5(b) Calculate ω_s, ω_s^*, and ω_c, ω_c^*.

$$\omega_s = \rho_s k_s \beta_s \delta_s (1 + h\beta_s)$$

$$\omega_s^* = a_o^2 \frac{(\rho_s^2 - 1)(\rho_s - 1)}{4} - \omega_s$$

$$\omega_c = \rho_c k_c \beta_c \delta_c (1 + h\beta_c)$$

$$\omega_c^* = a_o^2 \left[\frac{(\rho_c^2 + 1)(\rho_c - 1)}{4} - \frac{(\rho_s - 1)}{2}\right] - \omega_c$$

UHX-13.5.5(c) Calculate γ_b.

Configuration a:

$$\gamma_b = 0$$

Configuration b:

$$\gamma_b = \frac{G_c - C}{D_o}$$

Configuration c:

$$\gamma_b = \frac{G_c - G_1}{D_o}$$

Configuration d:

$$\gamma_b = \frac{G_c - G_s}{D_o}$$

UHX-13.5.6 Step 6. For each loading case, calculate P_s', P_t', P_γ, P_W, P_{rim}, and effective pressure P_e. A05

$$P_s' = \left(x_s + 2(1 - x_s)\nu_t + \frac{2}{K_{s,t}}\left(\frac{D_s}{D_o}\right)^2 \nu_s - \frac{\rho_s^2 - 1}{JK_{s,t}} - \frac{(1 - J)}{2JK_{s,t}} \frac{[D_J^2 - (2a_s)^2]}{D_o^2}\right) P_s$$

$$P_t' = \left(x_t + 2(1 - x_t)\nu_t + \frac{1}{JK_{s,t}}\right) P_t$$

$$P_\gamma = \frac{N_t K_t}{\pi a_o^2}\gamma$$

$$P_W = -\frac{U}{a_o^2}\frac{\gamma_b}{2\pi} W$$

$$P_{\text{rim}} = -\frac{U}{a_o^2}(\omega_s^* P_s - \omega_c^* P_t)$$

$$P_e = \frac{JK_{s,t}}{1 + JK_{s,t}[Q_{Z1} + (\rho_s - 1) Q_{Z2}]} \times (P_s' - P_t' + P_\gamma + P_W + P_{\text{rim}})$$

UHX-13.5.7 Step 7. For each loading case, calculate Q_2 and Q_3.

$$Q_2 = \frac{(\omega_s^* P_s - \omega_c^* P_t) + \frac{\gamma_b}{2\pi} W}{1 + \Phi Z_m}$$

$$Q_3 = Q_1 + \frac{2Q_2}{P_e a_o^2}$$

Using X_a and Q_3, determine coefficient F_m for each loading case from either Table UHX-13.1 or Figs. UHX-13.3-1 and UHX-13.3-2.

TABLE UHX-13.1
FORMULAS FOR DETERMINATION OF Z_d, Z_v, Z_m, AND F_m

(1) Calculate Bessel functions of order 0 relative to x, where x varies from 0 to X_a such that $0 < x \le X_a$:

$$\text{ber}\,(x) = \sum_{n=0}^{n=\infty} (-1)^n \frac{(x/2)^{4n}}{[(2n)!]^2} = 1 - \frac{(x/2)^4}{(2!)^2} + \frac{(x/2)^8}{(4!)^2} - \frac{(x/2)^{12}}{(6!)^2} + \ldots$$

$$\text{bei}\,(x) = \sum_{n=1}^{n=\infty} (-1)^{n-1} \frac{(x/2)^{4n-2}}{[(2n-1)!]^2} = + \frac{(x/2)^2}{(1!)^2} - \frac{(x/2)^6}{(3!)^2} + \frac{(x/2)^{10}}{(5!)^2} - \ldots$$

and their derivatives:

$$\text{ber}'\,(x) = \sum_{n=1}^{n=\infty} (-1)^n \frac{(2\,n)\,(x/2)^{4n-1}}{[(2n)!)]^2} = - \frac{2\,(x/2)^3}{(2!)^2} + \frac{4\,(x/2)^7}{(4!)^2} - \frac{6\,(x/2)^{11}}{(6!)^2} + \ldots$$

$$\text{bei}'\,(x) = \sum_{n=1}^{n=\infty} (-1)^{n-1} \frac{(2\,n-1)\,(x/2)^{4n-3}}{[(2n-1)!]^2} = \frac{(x/2)^1}{(1!)^2} - \frac{3\,(x/2)^5}{(3!)^2} + \frac{5\,(x/2)^9}{(5!)^2} - \ldots$$

NOTE: At least $n = 4 + x/2$ terms (rounded to the nearest integer) are required to obtain an adequate approximation of the Bessel functions and their derivatives.

(2) Calculate functions $\psi_1(x)$, $\psi_2(x)$, and $Z(x)$ relative to x:

$$\psi_1(x) = \text{bei}\,(x) + \frac{1-\nu^*}{x} \cdot \text{ber}'\,(x)$$

$$\psi_2(x) = \text{ber}\,(x) - \frac{1-\nu^*}{x} \cdot \text{bei}'\,(x)$$

(3) Calculate Z_a, Z_d, Z_v, and Z_m relative to X_a:

$$Z_a = \text{bei}'\,(X_a) \cdot \psi_2(X_a) - \text{ber}'\,(X_a) \cdot \psi_1(X_a)$$

$$Z_d = \frac{\text{ber}\,(X_a) \cdot \psi_2(X_a) + \text{bei}\,(X_a) \cdot \psi_1(X_a)}{X_a^3 \cdot Z_a}$$

$$Z_v = \frac{\text{ber}'\,(X_a) \cdot \psi_2(X_a) + \text{bei}'\,(X_a) \cdot \psi_1(X_a)}{X_a^2 \cdot Z_a}$$

$$Z_m = \frac{\text{ber}'^2\,(X_a) + \text{bei}'^2\,(X_a)}{X_a \cdot Z_a}$$

(4) Calculate functions $Q_m(x)$, $Q_v(x)$, and $F_m(x)$ relative to x:

$$Q_m(x) = \frac{\text{bei}'\,(X_a) \cdot \psi_2(x) - \text{ber}'\,(X_a) \cdot \psi_1(x)}{Z_a}$$

$$Q_v(x) = \frac{\psi_1(X_a) \cdot \psi_2(x) - \psi_2(X_a) \cdot \psi_1(x)}{X_a \cdot Z_a}$$

(5) For each loading case, calculate $F_m(x)$ relative to x:

$$F_m(x) = \frac{Q_v(x) + Q_3 \cdot Q_m(x)}{2}$$

(6) F_m is the maximum of the absolute value of $F_m(x)$ when x varies from 0 to X_a such that $0 < x \le X_a$:

$$F_m = \text{MAX}\,|F_m(x)|$$

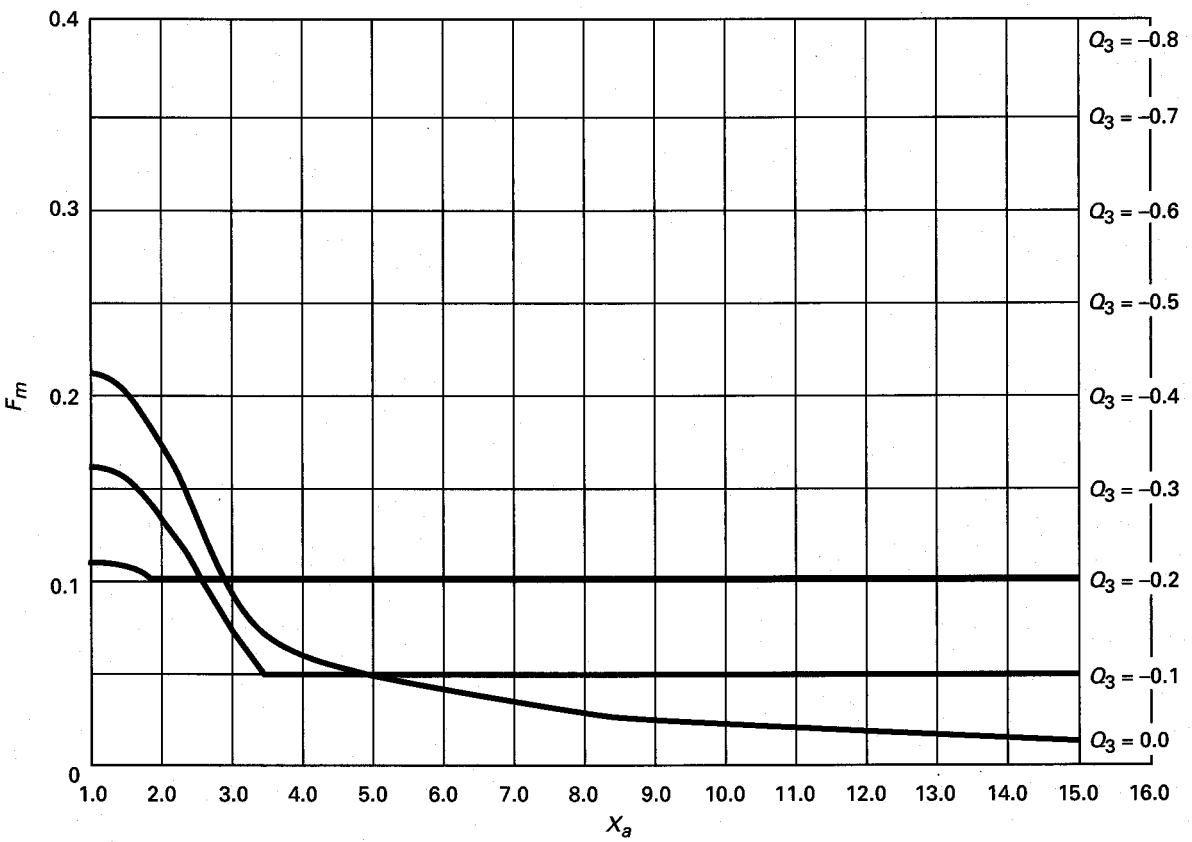

GENERAL NOTES:
(a) Curves giving F_m are valid for $v^* = 0.4$. They are sufficiently accurate to be used for other values of v^*.
(b) For values of X_a and Q_3 beyond those given by the curves, see Table UHX-13.1.

FIG. UHX-13.3-2 F_m VERSUS X_a ($-0.8 \le Q_3 \le 0.0$)

$$S_{tb} = \text{MIN}\left\{\left[\frac{S_{y,t}}{F_s}\left(1 - \frac{F_t}{2C_t}\right)\right], [S_t]\right\}$$

If $|\sigma_{t,o}| \le S_{tb}$, the tube design is acceptable. Otherwise, the tube design shall be reconsidered.

Configurations a, b, and c: Proceed to Step 10.

Configuration d: The calculation procedure is complete.

A05 **UHX-13.5.10 Step 10.** For each loading case, calculate the stresses in the shell and/or channel integral with the tubesheet.

Configurations a, b, and c: The shell shall have a uniform thickness of t_s for a minimum length of $1.8\sqrt{D_s t_s}$ adjacent to the tubesheet. Calculate the axial membrane stress $\sigma_{s,m}$, axial bending stress $\sigma_{s,b}$, and total axial stress σ_s, in the shell at its junction to the tubesheet.

$$\sigma_{s,m} = \frac{a_o^2}{2(a_s + t_s)t_s}\left[P_e + (\rho_s^2 - 1)(P_s - P_t)\right] + \frac{a_s^2}{2(a_s + t_s)t_s}P_t$$

$$\sigma_{s,b} = \frac{6}{t_s^2}k_s\left\{\beta_s\left[\delta_s P_s - v_s\frac{a_s}{E_s}\sigma_{s,m}\right] + \frac{6(1 - v^{*2})}{E^*}\left(\frac{a_o^3}{h^3}\right)\left(1 + \frac{h\beta_s}{2}\right) \times \left[P_e(Z_v + Z_m Q_1) + \frac{2}{a_o^2}Z_m Q_2\right]\right\}$$

$$\sigma_s = |\sigma_{s,m}| + |\sigma_{s,b}|$$

Configuration a: The channel shall have a uniform thickness of t_c for a minimum length of $1.8\sqrt{D_c t_c}$ adjacent to the tubesheet. Calculate the axial membrane stress $\sigma_{c,m}$,

axial bending stress $\sigma_{c,b}$, and total axial stress σ_c, in the channel at its junction to the tubesheet.

$$\sigma_{c,m} = \frac{a_c^2}{2(a_c + t_c)t_c} P_t$$

$$\sigma_{c,b} = \frac{6}{t_c^2} k_c \left\{ \beta_c \delta_c P_t - \frac{6(1 - \nu^{*2})}{E^*} \left(\frac{a_o^3}{h^3}\right)\left(1 + \frac{h\beta_c}{2}\right) \times \left[P_e(Z_\nu + Z_m Q_1) + \frac{2}{a_o^2} Z_m Q_2 \right] \right\}$$

$$\sigma_c = |\sigma_{c,m}| + |\sigma_{c,b}|$$

Configuration a: For loading cases 1, 2, and 3, if $\sigma_s \le 1.5\, S_s$ and $\sigma_c \le 1.5\, S_c$, and for loading cases 4, 5, 6, and 7, if $\sigma_s \le S_{PS,s}$ and $\sigma_c \le S_{PS,c}$, the shell and channel designs are acceptable, and the calculation procedure is complete. Otherwise proceed to Step 11.

Configurations b and c: For loading cases 1, 2, and 3, if $\sigma_s \le 1.5\, S_s$, and for loading cases 4, 5, 6, and 7, if $\sigma_s \le S_{PS,s}$, the shell design is acceptable, and the calculation procedure is complete. Otherwise, proceed to Step 11.

UHX-13.5.11 Step 11. The design shall be reconsidered by using one or a combination of the following three options.

Option 1. Increase the assumed tubesheet thickness h and return to Step 2.

Option 2. Increase the integral shell and/or channel thickness as follows and return to Step 1.

Configurations a, b, and c: If $\sigma_s > 1.5\, S_s$, increase the shell thickness t_s. It is permitted to increase the shell thickness adjacent to the tubesheet only. (See UHX-13.6.)

Configuration a: If $\sigma_c > 1.5\, S_c$ increase the channel thickness t_c.

Option 3. Perform the elastic-plastic calculation procedure as defined in UHX-13.7. (See UHX-13.7.2 for limitations.)

Configuration a: This option may only be used when $\sigma_s \le S_{PS,s}$ and $\sigma_c \le S_{PS,c}$ for pressure loading cases 1, 2, and 3.

Configurations b and c: This option may only be used when $\sigma_s \le S_{PS,s}$ for pressure loading cases 1, 2, and 3.

UHX-13.6 Calculation Procedure for Effect of Different Shell Material and Thickness Adjacent to the Tubesheet

UHX-13.6.1 Scope

UHX-13.6.1(a) This procedure describes how to use the rules of UHX-13.5 when the shell has a different thickness and/or a different material adjacent to the tubesheet (see Fig. UHX-13.4).

UHX-13.6.1(b) Use of this procedure may result in a smaller tubesheet thickness and should be considered when optimization of the tubesheet thickness or shell stress is desired.

UHX-13.6.2 Conditions of Applicability. This calculation procedure applies only when the shell is integral with the tubesheet (Configurations a, b, and c).

UHX-13.6.3 Additional Nomenclature

$E_{s,1}$ = modulus of elasticity for shell material adjacent to tubesheets at T_s

ℓ_1, ℓ_1' = lengths of shell of thickness $t_{s,1}$ adjacent to tubesheets

$t_{s,1}$ = shell thickness adjacent to tubesheets

$S_{s,1}$ = allowable stress for shell material adjacent to tubesheets at T_s

$S_{y,s,1}$ = yield strength for shell material adjacent to tubesheets at T_s. The yield strength shall be taken from Table Y-1 in Section II, Part D. When a yield strength value is not listed in Table Y-1, one may be obtained by using the procedure in UG-28(c)(2) Step 3.

$S_{PS,s,1}$ = allowable primary plus secondary stress for shell material at T_s per UG-23(e)

$\alpha_{s,m,1}$ = mean coefficient of thermal expansion of shell material adjacent to tubesheets at $T_{s,m}$

UHX-13.6.4 Calculation Procedure. The calculation procedure outlined in UHX-13.5 shall be performed, accounting for the following modifications.

UHX-13.6.4(a) The shell shall have a thickness of $t_{s,1}$ for a minimum length of $1.8\sqrt{D_s t_{s,1}}$ adjacent to the tubesheets.

UHX-13.6.4(b) In Step 2, replace the formula for K_s with:

$$K_s^* = \frac{\pi(D_s + t_s)}{\dfrac{L - \ell_1 - \ell_1'}{E_s\, t_s} + \dfrac{\ell_1 + \ell_1'}{E_{s,1}\, t_{s,1}}}$$

Calculate $K_{s,t}$ and J, replacing K_s with K_s^*. Calculate β_s, k_s, and δ_s, replacing t_s with $t_{s,1}$ and E_s with $E_{s,1}$.

UHX-13.6.4(c) In Step 5, replace the formula for γ with:

$$\gamma^* = (T_{t,m} - T_a)\alpha_{t,m} L - (T_{s,m} - T_a) \times \left[\alpha_{s,m}(L - \ell_1 - \ell_1') + \alpha_{s,m,1}(\ell_1 + \ell_1') \right]$$

UHX-13.6.4(d) In Step 6, calculate P_γ, replacing γ with γ^*.

UHX-13.6.4(e) In Step 10, calculate $\sigma_{s,m}$ and $\sigma_{s,b}$, replacing t_s with $t_{s,1}$ and E_s with $E_{s,1}$. Replace S_s with $S_{s,1}$ and $S_{PS,s}$ with $S_{PS,s,1}$.

If the elastic-plastic calculation procedure of UHX-13.7 is being performed, replace $S_{y,s}$ with $S_{y,s,1}$,

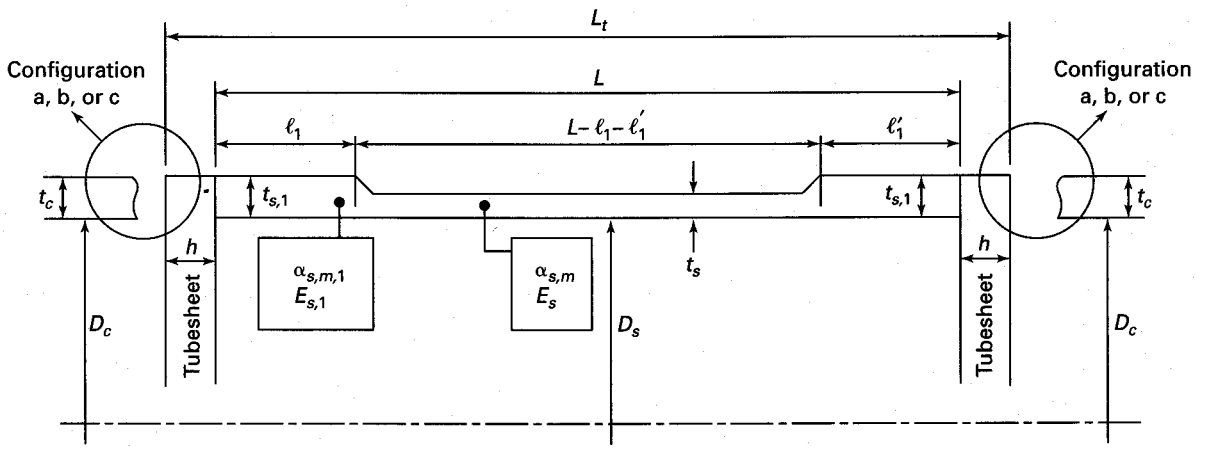

FIG. UHX-13.4 SHELL WITH INCREASED THICKNESS ADJACENT TO THE TUBESHEETS

$S_{PS,s}$ with $S_{PS,s,1}$, and E_s with $E_{s,1}$ in UHX-13.7.

If the radial thermal expansion procedure of UHX-13.8 is being performed, replace t_s with $t_{s,1}$ and E_s with $E_{s,1}$ in UHX-13.8.

UHX-13.7 Calculation Procedure for Effect of Plasticity at Tubesheet/Channel or Shell Joint

UHX-13.7.1 Scope. This procedure describes how to use the rules of UHX-13.5 when the effect of plasticity at the shell-tubesheet and/or channel-tubesheet joint is to be considered.

If the discontinuity stresses at the shell-tubesheet and/or channel-tubesheet joint exceed the allowable stress limits, the thickness of the shell, channel, or tubesheet may be increased to meet the stress limits given in UHX-13.5 above. As an alternative, when the calculated tubesheet stresses are within the allowable stress limits, but either or both of the calculated shell or channel total stresses exceed their allowable stress limits, one additional "elastic-plastic solution" calculation may be performed.

This calculation permits a reduction of the shell and/or channel Young's modulus, where it affects the rotation of the joint, to reflect the anticipated load shift resulting from plastic action at the joint. The reduced effective modulus has the effect of reducing the shell and/or channel stresses in the elastic-plastic calculation; however, due to load shifting this usually leads to an increase in the tubesheet stress. In most cases, an elastic-plastic calculation using the appropriate reduced shell or channel Young's modulus results in a design where the calculated tubesheet stresses are within the allowable stress limits.

UHX-13.7.2 Conditions of Applicability

UHX-13.7.2(a) This procedure shall not be used at temperatures where the time-dependent properties govern the allowable stress.

UHX-13.7.2(b) This procedure applies only for loading cases 1, 2, and 3.

UHX-13.7.2(c) This procedure applies to Configuration a when $\sigma_s \le S_{PS,s}$ and $\sigma_c \le S_{PS,c}$.

UHX-13.7.2(d) This procedure applies to Configurations b and c when $\sigma_s \le S_{PS,s}$.

UHX-13.7.2(e) This procedure may only be used once for each iteration of tubesheet, shell, and channel thicknesses and materials.

UHX-13.7.3 Calculation Procedure. After the calculation procedure outlined in UHX-13.5 (Steps 1 through 10) has been performed for the elastic solution, one elastic-plastic calculation using the referenced steps from UHX-13.5 shall be performed in accordance with the following procedure for each applicable loading case. Except for those quantities modified below, the quantities to be used for the elastic-plastic calculation shall be the same as those calculated for the corresponding elastic loading case.

UHX-13.7.3(a) Define the maximum permissible bending stress limit in the shell and channel.

Configurations a, b, and c:

$$S_s^* = \text{MIN}\left[(S_{y,s}), \left(\frac{S_{PS,s}}{2}\right)\right]$$

Configuration a:

$$S_c^* = \text{MIN}\left[(S_{y,c}), \left(\frac{S_{PS,c}}{2}\right)\right]$$

UHX-13.7.3(b) Using bending stresses $\sigma_{s,b}$ and $\sigma_{c,b}$ computed in Step 10 for the elastic solution, determine fact_s and fact_c as follows:

Configurations a, b, and c:

$$\text{fact}_s = \text{MIN}\left[\left(1.4 - 0.4\frac{|\sigma_{s,b}|}{S_s^*}\right), (1)\right]$$

Configuration a:

$$\text{fact}_c = \text{MIN}\left[\left(1.4 - 0.4\frac{|\sigma_{c,b}|}{S_c^*}\right), (1)\right]$$

Configuration a: If $\text{fact}_s = 1.0$ and $\text{fact}_c = 1.0$, the design is acceptable, and the calculation procedure is complete. Otherwise, proceed to (c) below.

Configurations b and c: If $\text{fact}_s = 1.0$, the design is acceptable, and the calculation procedure is complete. Otherwise, proceed to (c) below.

UHX-13.7.3(c) Calculate reduced values of E_s and E_c as follows:

Configurations a, b, and c: $E_s^* = E_s$ (fact_s)

Configuration a: $E_c^* = E_c$ (fact_c)

UHX-13.7.3(d) In Step 2, recalculate k_s, λ_s, k_c, and λ_c replacing E_s by E_s^* and E_c by E_c^*.

UHX-13.7.3(e) In Step 4, recalculate F, Φ, Q_1, Q_{Z1}, Q_{Z2}, and U.

UHX-13.7.3(f) In Step 6, recalculate P_W, P_{rim}, and P_e.

UHX-13.7.3(g) In Step 7, recalculate Q_2, Q_3, F_m, and the tubesheet bending stress σ.

If $|\sigma| \le 1.5S$, the design is acceptable and the calculation procedure is complete. Otherwise, the unit geometry shall be reconsidered.

UHX-13.8 Calculation Procedure for Effect of Radial Differential Thermal Expansion Adjacent to the Tubesheet

A05

UHX-13.8.1 Scope

UHX-13.8.1(a) This procedure describes how to use the rules of UHX-13.5 when the effect of radial differential thermal expansion between the tubesheet and integral shell or channel is to be considered.

UHX-13.8.1(b) This procedure shall be used when cyclic or dynamic reactions due to pressure or thermal variations are specified [see UG-22(e)].

UHX-13.8.1(c) This procedure shall be used when specified by the user. The user shall provide the Manufacturer with the data necessary to determine the required tubesheet, channel, and shell metal temperatures.

UHX-13.8.1(d) Optionally, the designer may use this procedure to consider the effect of radial differential thermal expansion even when it is not required by (b) or (c) above.

UHX-13.8.2 Conditions of Applicability. This calculation procedure applies only when the tubesheet is integral with the shell or channel (Configuations a, b, and c).

UHX-13.8.3 Additional Nomenclature

T' = tubesheet metal temperature at the rim
T'_c = channel metal temperature at the tubesheet
T'_s = shell metal temperature at the tubesheet
α' = mean coefficient of thermal expansion of tubesheet material at T'
α'_c = mean coefficient of thermal expansion of channel material at T'_c
α'_s = mean coefficient of thermal expansion of shell material at T'_s

UHX-13.8.4 Calculation Procedure. The calculation procedure outlined in UHX-13.5 and UHX-13.6, if applicable, shall be performed only for loading cases 4, 5, 6, and 7, according to the following modifications.

UHX-13.8.4(a) Determine the average temperature of the unperforated rim T_r.

Configuration a:

$$T_r = \frac{T' + T'_s + T'_c}{3}$$

Configurations b and c:

$$T_r = \frac{T' + T'_s}{2}$$

For conservative values of P_s^* and P_c^*, $T_r = T'$ may be used.

UHX-13.8.4(b) Determine the average temperature of the shell T_s^* and channel T_c^* at their junction to the tubesheet as follows:

Configurations a, b, and c:

$$T_s^* = \frac{T'_s + T_r}{2}$$

Configuration a:

$$T_c^* = \frac{T'_c + T_r}{2}$$

For conservative values of P_s^* and P_c^*, $T_s^* = T'_s$ and $T_c^* = T'_c$ may be used.

UHX-13.8.4(c) Calculate P_s^* and P_c^*.

Configurations a, b, and c:

$$P_s^* = \frac{E_s t_s}{a_s}[\alpha'_s(T_s^* - T_a) - \alpha'(T_r - T_a)]$$

Configuration a:

$$P_c^* = \frac{E_c t_c}{a_c}[\alpha'_c(T_c^* - T_a) - \alpha'(T_r - T_a)]$$

Configurations b and c:

$$P_c^* = 0$$

A05 *UHX-13.8.4(d)* Calculate P_ω.

$$P_\omega = \frac{U}{a_o^2}\left(\omega_s P_s^* - \omega_c P_c^*\right)$$

A05 *UHX-13.8.4(e)* In Step 6, replace the formula for P_e with:

$$P_e = \frac{JK_{s,t}}{1 + JK_{s,t}\left[Q_{Z1} + (\rho_s - 1)Q_{Z2}\right]} \times (P'_s - P'_t + P_\gamma + P_\omega + P_W + P_{\text{rim}})$$

UHX-13.8.4(f) In Step 7, replace the formula for Q_2 with:

$$Q_2 = \frac{(\omega_s^* P_s - \omega_c^* P_t) - (\omega_s P_s^* - \omega_c P_c^*) + \frac{\gamma_b}{2\pi}W}{1 + \Phi\ Z_m}$$

UHX-13.8.4(g) In Step 10, replace the formulas for $\sigma_{s,b}$ and $\sigma_{c,b}$ with:

$$\sigma_{s,b} = \frac{6}{t_s^2}k_s\left\{\beta_s\left[\delta_s P_s + \frac{a_s^2}{E_s t_s}P_s^* - \nu_s\frac{a_s}{E_s}\sigma_{s,m}\right] + \frac{6(1-\nu^{*2})}{E^*} \times \left(\frac{a_o^3}{h^3}\right)\left(1 + \frac{h\beta_s}{2}\right)\left[P_e\left(Z_\nu + Z_m Q_1\right) + \frac{2}{a_o^2}Z_m Q_2\right]\right\}$$

$$\sigma_{c,b} = \frac{6}{t_c^2}k_c\left\{\beta_c\left[\delta_c P_t + \frac{a_c^2}{E_c t_c}P_c^*\right] - \frac{6(1-\nu^{*2})}{E^*} \times \left(\frac{a_o^3}{h^3}\right)\left(1 + \frac{h\beta_c}{2}\right)\left[P_e\left(Z_\nu + Z_m Q_1\right) + \frac{2}{a_o^2}Z_m Q_2\right]\right\}$$

UHX-14 RULES FOR THE DESIGN OF FLOATING TUBESHEETS

UHX-14.1 Scope

UHX-14.1(a) These rules cover the design of tubesheets for floating tubesheet heat exchangers that have one stationary tubesheet and one floating tubesheet. Three types of floating tubesheet heat exchangers are covered as shown in Fig. UHX-14.1.

UHX-14.1(a)(1) Sketch (a), immersed floating head;

UHX-14.1(a)(2) Sketch (b), externally sealed floating head;

UHX-14.1(a)(3) Sketch (c), internally sealed floating tubesheet.

UHX-14.1(b) Stationary tubesheets may have one of the six configurations shown in Fig. UHX-14.2:

UHX-14.1(b)(1) Configuration a: tubesheet integral with shell and channel;

UHX-14.1(b)(2) Configuration b: tubesheet integral with shell and gasketed with channel, extended as a flange;

UHX-14.1(b)(3) Configuration c: tubesheet integral with shell and gasketed with channel, not extended as a flange;

UHX-14.1(b)(4) Configuration d: tubesheet gasketed with shell and channel;

UHX-14.1(b)(5) Configuration e: tubesheet gasketed with shell and integral with channel, extended as a flange;

UHX-14.1(b)(6) Configuration f: tubesheet gasketed with shell and integral with channel, not extended as a flange.

UHX-14.1(c) Floating tubesheets may have one of the four configurations shown in Fig. UHX-14.3:

UHX-14.1(c)(1) Configuration A: tubesheet integral;

UHX-14.1(c)(2) Configuration B: tubesheet gasketed, extended as a flange;

UHX-14.1(c)(3) Configuration C: tubesheet gasketed, not extended as a flange;

UHX-14.1(c)(4) Configuration D: tubesheet internally sealed.

UHX-14.2 Conditions of Applicability. The two tubesheets shall have the same thickness and material.

UHX-14.3 Nomenclature. The symbols described below are used for the design of the stationary and floating tubesheets. Symbols D_o, E^*, h'_g, μ, μ^*, and ν^* are defined in UHX-11. A05

A = outside diameter of tubesheet

a_c = radial channel dimension

Configurations a, e, f, and A: $a_c = D_c / 2$

Configurations b, c, d, B, and C: $a_c = G_c / 2$

Configuration D: $a_c = A / 2$

a_o = equivalent radius of outer tube limit circle

a_s = radial shell dimension

Configurations a, b, and c: $a_s = D_s / 2$

Configurations d, e, and f: $a_s = G_s / 2$

Configurations A, B, C, and D: $a_s = a_c$

C = bolt circle diameter (see Appendix 2)

D_c = inside channel diameter

D_s = inside shell diameter

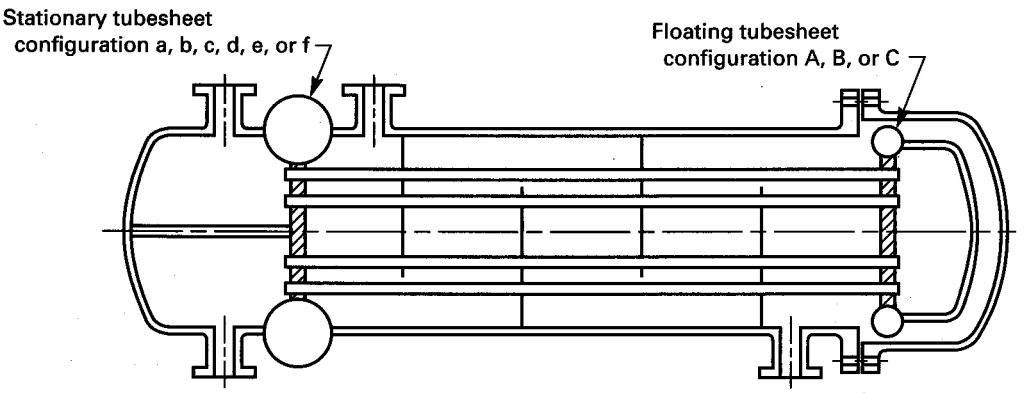

(a) Typical Floating Tubesheet Exchanger With an Immersed Floating Head

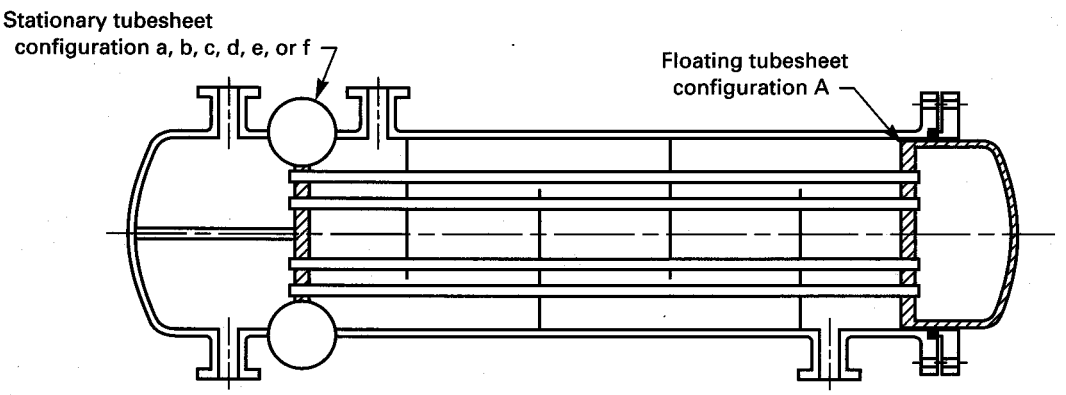

(b) Typical Floating Tubesheet Exchanger With an Externally Sealed Floating Head

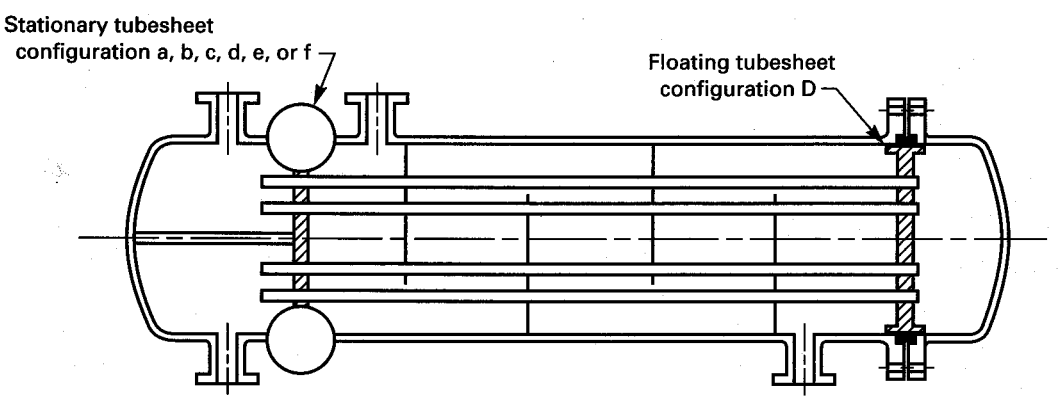

(c) Typical Floating Tubesheet Exchanger With an Internally Sealed Floating Tubesheet

FIG. UHX-14.1 FLOATING TUBESHEET HEAT EXCHANGERS

A05 **UHX-14.5.3 Step 3.** Calculate h/p. If ρ changes, recalculate d^* and μ^* from UHX-11.5.1.

Determine E^*/E and ν^* relative to h/p from UHX-11.5.2.

Calculate X_a.

$$X_a = \left[24\,(1 - \nu^{*2})N_t \frac{E_t\, t_t\, (d_t - t_t) a_o^2}{E^*\, L\, h^3}\right]^{1/4}$$

Using the calculated value of X_a, enter either Table UHX-13.1 or Fig. UHX-13.2 to determine Z_d, Z_v, and Z_m.

UHX-14.5.4 Step 4. Calculate diameter ratio K and coefficient F.

$$K = \frac{A}{D_o}$$

$$F = \frac{1 - \nu^*}{E^*}(\lambda_s + \lambda_c + E \ln K)$$

Calculate Φ and Q_1.

$$\Phi = (1 + \nu^*)F$$

$$Q_1 = \frac{\rho_s - 1 - \Phi Z_v}{1 + \Phi Z_m}$$

UHX-14.5.5 Step 5

A05 *UHX-14.5.5(a)* Calculate ω_s, ω_s^* and ω_c, ω_c^*.

$$\omega_s = \rho_s k_s \beta_s \delta_s (1 + h\beta_s)$$

$$\omega_s^* = a_o^2 \frac{(\rho_s^2 - 1)(\rho_s - 1)}{4} - \omega_s$$

$$\omega_c = \rho_c k_c \beta_c \delta_c (1 + h\beta_c)$$

$$\omega_c^* = a_o^2 \left[\frac{(\rho_s^2 + 1)(\rho_c - 1)}{4} - \frac{(\rho_s - 1)}{2}\right] - \omega_c$$

UHX-14.5.5(b) Calculate γ_b.

Configurations a, A, and D:

$$\gamma_b = 0$$

Configurations b and B:

$$\gamma_b = \frac{G_c - C}{D_o}$$

Configurations c and C:

$$\gamma_b = \frac{G_c - G_1}{D_o}$$

Configuration d:

$$\gamma_b = \frac{G_c - G_s}{D_o}$$

Configuration e:

$$\gamma_b = \frac{C - G_s}{D_o}$$

Configuration f:

$$\gamma_b = \frac{G_1 - G_s}{D_o}$$

UHX-14.5.6 Step 6. For each loading case, calculate the effective pressure P_e.

For an exchanger with an immersed floating head [Fig. UHX-14.1(a)]: $P_e = P_s - P_t$

For an exchanger with an externally sealed floating head [Fig. UHX-14.1(b)]: $P_e = P_s\,(1 - \rho_s^2) - P_t$

For an exchanger with an internally sealed floating tubesheet [Fig. UHX-14.1(c)]: $P_e = (P_s - P_t)(1 - \rho_s^2)$

UHX-14.5.7 Step 7. For each loading case, calculate Q_2.

$$Q_2 = \frac{(\omega_s^* P_s - \omega_c^* P_t) + \frac{\gamma_b}{2\pi} W}{1 + \Phi Z_m}$$

For each loading case, calculate the bending stress in the tubesheet in accordance with (a) or (b) below.

UHX-14.5.7(a) When $P_e = 0$, calculate the bending stress σ.

$$\sigma = \frac{6Q_2}{\mu^*(h - h_g')^2}$$

UHX-14.5.7(b) When $P_e \neq 0$:

UHX-14.5.7(b)(1) Calculate Q_3.

$$Q_3 = Q_1 + \frac{2\,Q_2}{P_e a_o^2}$$

UHX-14.5.7(b)(2) Using X_a and Q_3, determine coefficient F_m for each loading case from either Table UHX-13.1 or Figs. UHX-13.3-1 and UHX-13.3-2.

UHX-14.5.7(b)(3) Calculate the bending stress σ.

$$\sigma = \left(\frac{1.5\,F_m}{\mu^*}\right)\left(\frac{2a_o}{h - h_g'}\right)^2 P_e$$

For loading cases 1, 2, and 3, if $|\sigma| \le 1.5S$, and for loading cases 4, 5, 6, and 7, if $|\sigma| \le S_{PS}$, the assumed tubesheet thickness is acceptable for bending. Otherwise, increase the assumed tubesheet thickness h and return to Step 3.

Configurations a, b, c, d, e, and f: Proceed to Step 8.

Configuration A: Proceed to Step 10.

Configurations B, C, and D: The calculation procedure is complete.

UHX-14.5.8 Step 8. For each loading case, calculate the average shear stress τ in the tubesheet at the outer edge of the perforated region.

$$\tau = \left(\frac{1}{2\mu}\right)\left(\frac{a_o}{h}\right)P_e$$

If $|\tau| \le 0.8S$, the assumed tubesheet thickness is acceptable for shear. Otherwise, increase the assumed tubesheet thickness h and return to Step 3.

UHX-14.5.9 Step 9. Perform this step for each loading case.

UHX-14.5.9(a) Calculate the axial tube stress $\sigma_{t,o}$ in the outermost tube row.

$$\sigma_{t,o} = \frac{2(P_s x_s - P_t x_t) - X_a^4\left(P_e(Z_d + Z_v Q_1) + \dfrac{2Q_2 Z_v}{a_o^2}\right)}{2(x_t - x_s)}$$

For loading cases 1, 2, and 3, if $|\sigma_{t,o}| > S_t$, and for loading cases 4, 5, 6, and 7, if $|\sigma_{t,o}| > 2S_t$, the tube design shall be reconsidered.

If $\sigma_{t,o}$ is negative, proceed to (b) below. Otherwise, the tube design is acceptable.

Configurations a, b, c, e, and f: Proceed to Step 10.

Configuration d: The calculation procedure is complete.

UHX-14.5.9(b) Check the tubes for buckling.

UHX-14.5.9(b)(1) Calculate the largest equivalent unsupported buckling length of the tube ℓ_t considering the unsupported tube spans ℓ and their corresponding method of support k.

$$\ell_t = k\,\ell$$

UHX-14.5.9(b)(2) Calculate r_t, F_t, and C_t.

$$r_t = \frac{\sqrt{d_t^2 + (d_t - 2t_t)^2}}{4}$$

$$F_t = \frac{\ell_t}{r_t}$$

$$C_t = \sqrt{\frac{2\pi^2 E_t}{S_{y,t}}}$$

UHX-14.5.9(b)(3) Determine the factor of safety F_s in accordance with (a) or (b) below:

UHX-14.5.9(b)(3)(a) When $P_e \ne 0$,

$$F_s = \text{MAX}\,[(3.25\text{-}0.25\,[Z_d + Q_3 Z_v]\,X_a^4),\,(1.25)]$$

F_s need not be taken greater than 2.0.

UHX-14.5.9(b)(3)(b) When $P_e = 0$, $F_s = 1.25$

UHX-14.5.9(b)(4) Determine the maximum permissible buckling stress limit S_{tb} for the tubes in accordance with (a) or (b) below:

UHX-14.5.9(b)(4)(a) When $C_t \le F_t$,

$$S_{tb} = \text{MIN}\left\{\left[\frac{1}{F_s}\frac{\pi^2 E_t}{F_t^2}\right],[S_t]\right\}$$

UHX-14.5.9(b)(4)(b) When $C_t > F_t$,

$$S_{tb} = \text{MIN}\left\{\left[\frac{S_{y,t}}{F_s}\left(1 - \frac{F_t}{2\,C_t}\right)\right],[S_t]\right\}$$

If $|\sigma_{t,o}| \le S_{tb}$, the tube design is acceptable. Otherwise, the tube design shall be reconsidered.

Configurations a, b, c, e, and f: Proceed to Step 10.

Configuration d: The calculation procedure is complete.

UHX-14.5.10 Step 10. For each loading case, calculate the stresses in the shell and/or channel integral with the tubesheet.

Configurations a, b, and c: The shell shall have a uniform thickness of t_s for a minimum length of $1.8\sqrt{D_s t_s}$ adjacent to the tubesheet. Calculate the axial membrane stress $\sigma_{s,m}$, axial bending stress $\sigma_{s,b}$, and total axial stress σ_s in the shell at its junction to the tubesheet.

$$\sigma_{s,m} = \frac{a_o^2}{2(a_s + t_s)t_s}\left[P_e + (\rho_s^2 - 1)(P_s - P_t)\right] + \frac{a_s^2}{2(a_s + t_s)t_s}P_t$$

$$\sigma_{s,b} = \frac{6}{t_s^2}k_s\left\{\beta_s\delta_s P_s + \frac{6(1 - \nu^{*2})}{E^*}\left(\frac{a_o^3}{h^3}\right)\left(1 + \frac{h\beta_s}{2}\right) \times \left[P_e(Z_v + Z_m Q_1) + \frac{2}{a_o^2}Z_m Q_2\right]\right\}$$

$$\sigma_s = |\sigma_{s,m}| + |\sigma_{s,b}|$$

Configurations a, e, f, and A: The channel shall have a uniform thickness of t_c for a minimum length of $1.8\sqrt{D_c t_c}$ adjacent to the tubesheet. Calculate the axial membrane stress $\sigma_{c,m}$, axial bending stress $\sigma_{c,b}$, and total axial stress σ_c, in the channel at its junction to the tubesheet.

$$\sigma_{c,m} = \frac{a_c^2}{2(a_c + t_c)t_c}P_t$$

$$\sigma_{c,b} = \frac{6}{t_c^2}k_c\left\{\beta_c\delta_c P_t - \frac{6(1 - \nu^{*2})}{E^*}\left(\frac{a_o^3}{h^3}\right)\left(1 + \frac{h\beta_c}{2}\right) \times \left[P_e(Z_v + Z_m Q_1) + \frac{2}{a_o^2}Z_m Q_2\right]\right\}$$

$$\sigma_c = |\sigma_{c,m}| + |\sigma_{c,b}|$$

Configuration a: For loading cases 1, 2, and 3, if $\sigma_s \le 1.5S_s$ and $\sigma_c \le 1.5S_c$, and for loading cases 4, 5, 6, and 7, if $\sigma_s \le S_{PS,s}$ and $\sigma_c \le S_{PS,c}$, the shell and channel

designs are acceptable, and the calculation procedure is complete. Otherwise proceed to Step 11.

Configurations b and c: For loading cases 1, 2, and 3, if $\sigma_s \le 1.5S_s$, and for loading cases 4, 5, 6, and 7, if $\sigma_s \le S_{PS,s}$, the shell design is acceptable, and the calculation procedure is complete. Otherwise, proceed to Step 11.

Configurations e, f, and A: For loading cases 1, 2, and 3, if $\sigma_c \le 1.5S_c$, and for loading cases 4, 5, 6, and 7, if $\sigma_c \le S_{PS,c}$, the channel design is acceptable and the calculation procedure is complete. Otherwise, proceed to Step 11.

UHX-14.5.11 Step 11. The design shall be reconsidered by using one or a combination of the following two options.

Option 1. Increase the assumed tubesheet thickness h and return to Step 2.

Option 2. Increase the integral shell and/or channel thickness as follows and return to Step 1.

Configurations a, b, and c: If $\sigma_s > 1.5S_s$, increase the shell thickness t_s.

Configurations a, e, f, and A: If $\sigma_c > 1.5S_c$, increase the channel thickness t_c.

UHX-14.6 Calculation Procedure for Effect of Radial Thermal Expansion Adjacent to the Tubesheet

UHX-14.6.1 Scope

UHX-14.6.1(a) This procedures describes how to use the rules of UHX-14.5 when the effect of radial differential thermal expansion between the tubesheet and integral shell or channel is to be considered.

UHX-14.6.1(b) This procedure shall be used when cyclic or dynamic reactions due to pressure or thermal variations are specified [see UG-22(e)]

UHX-14.6.1(c) This procedure shall be used when specified by the user. The user shall provide the Manufacturer with the data necessary to determine the required tubesheet, channel, and shell material temperatures.

UHX-14.6.1(d) Optionally, the designer may use this procedure to consider the effect of radial differential thermal expansion even when it is not required by (b) or (c) above.

UHX-14.6.2 Conditions of Applicability. This calculation procedure applies only when the tubesheeet is integral with the shell or channel (Configurations a, b, c, e, f, and A).

UHX-14.6.3 Additional Nomenclature

T' = tubesheet metal temperature at the rim
T'_c = channel metal temperature at the tubesheet
T'_s = shell metal temperature at the tubesheet
α' = mean coefficient of thermal expansion of tubesheet material at T'
α'_c = mean coefficient of thermal expansion of channel material at T'_c
α'_s = mean coefficient of thermal expansion of shell material at T'_s

UHX-14.6.4 Calculation Procedure. The calculation procedure outlined in UHX-14.5 shall be performed for loading cases 4, 5, 6, 7, accounting for the following modifications.

UHX-14.6.4(a) Determine the average temperature of the unperforated rim T_r.

Configuration a:

$$T_r = \frac{T' + T'_s + T'_c}{3}$$

Configurations b and c:

$$T_r = \frac{T' + T'_s}{2}$$

Configurations e, f, and A:

$$T_r = \frac{T' + T'_c}{2}$$

For conservative values of P_s^* and P_c^*, $T_r = T'$ may be used.

UHX-14.6.4(b) Determine the average temperature of the shell T_s^* and channel T_c^* at their junction to the tubeshet as follows:

Configurations a, b, and c:

$$T_s^* = \frac{T'_s + T_r}{2}$$

Configurations a, e, f, and A:

$$T_c^* = \frac{T'_c + T_r}{2}$$

For conservative values of P_s^* and P_c^*, $T_s^* = T'_s$ and $T_c^* = T'_c$ may be used.

UHX-14.6.4(c) Calcualate P_s^* and P_c^*.

Configurations a, b, and c:

$$P_s^* = \frac{E_s t_s}{a_s}\left[\alpha'_s(T_s^* - T_a) - \alpha'(T_r - T_a)\right]$$

Configurations e, f, and A:

$$P_s^* = 0$$

Configurations a, e, f, and A:

$$P_c^* = \frac{E_c t_c}{a_c}\left[\alpha'_c(T_c^* - T_a) - \alpha'(T_r - T_a)\right]$$

Configurations b and c:

$$P_c^* = 0$$

UHX-14.6.4(d) In Step 7, replace the formula for Q_2 with:

$$Q_2 = \frac{(\omega_s^* P_s - \omega_c^* P_t) - (\omega_s P_s^* - \omega_c P_c^*) + \frac{\gamma_b}{2\pi} W}{1 + \Phi\ Z_m}$$

UHX-14.6.4(e) In Step 10, replace the formulas for $\sigma_{s,b}$ and $\sigma_{c,b}$ with:

$$\sigma_{s,b} = \frac{6}{t_s^2} k_s \left\{ \beta_s \left[\delta_s P_s + \frac{a_s^2}{E_s t_s} P_s^* \right] + \frac{6(1 - \nu^{*2})}{E^*} \left(\frac{a_o^3}{h^3} \right) \times \left(1 + \frac{h\beta_s}{2} \right) \left[P_e (Z_v + Z_m\, Q_1) + \frac{2}{a_o^2} Z_m\, Q_2 \right] \right\}$$

$$\sigma_{c,b} = \frac{6}{t_c^2} k_c \left\{ \beta_c \left[\delta_c P_t + \frac{a_c^2}{E_c t_c} P_c^* \right] - \frac{6(1 - \nu^{*2})}{E^*} \left(\frac{a_o^3}{h^3} \right) \times \left(1 + \frac{h\beta_c}{2} \right) \left[P_e (Z_v + Z_m\, Q_1) + \frac{2}{a_o^2} Z_m\, Q_2 \right] \right\}$$

A05 **UHX-15 TUBE-TO-TUBESHEET WELDS**

Tube-to-tubesheet welds shall be in accordance with UW-20, as applicable. Tube-to-tubesheet welds not covered by UW-20 shall be in accordance with U-2(g).

UHX-16 THIN-WALLED EXPANSION JOINTS

Thin-walled expansion joints shall be in accordance with Appendix 26, as applicable. Thin-walled expansion joints not covered by Appendix 26 shall be in accordance with U-2(g).

UHX-17 THICK-WALLED EXPANSION JOINTS

Thick-walled expansion joints shall be in accordance with Appendix 5, as applicable. Thick-walled expansion joints not covered by Appendix 5 shall be in accordance with U-2(g).

UHX-18 PRESSURE TEST REQUIREMENTS

The shell side and the tube side of the heat exchanger shall be subjected to a pressure test in accordance with UG-99 or UG-100.

UHX-19 HEAT EXCHANGER MARKING

UHX-19.1 Required Marking. The marking of heat exchangers shall be in accordance with UG-116 using the specific requirements of UG-116(j) for combination units (multi-chamber vessels). When the markings are grouped in one location in accordance with requirements of UG-116(j)(1) and abbreviations for each chamber are used, they shall be as follows:

UHX-19.1(a) For markings in accordance with UG-116(a)(3) and UG-116(a)(4), the chambers shall be abbreviated as:

(1) SHELL for shell side

(2) TUBES for tube side

This abbreviation shall precede the appropriate design data. For example, use:

(1) SHELL FV&300 psi (FV&2000 kPa) at 500°F (260°C) for the shell side maximum allowable working pressure

(2) TUBES 150 psi (1 000 kPa) at 350°F (175°C) for the tube side maximum allowable working pressure

UHX-19.1(b) When the markings in accordance with UG-116(b)(1), UG-116(c), UG-116(e) and UG-116(f) are different for each chamber, the chambers shall be abbreviated as:

(1) S for shell side

(2) T for tube side

This abbreviation shall follow the appropriate letter designation and shall be separated by a hyphen. For example, use:

(1) L-T for lethal service tube side

(2) RT 1-S for full radiography on the shell side

UHX-19.2 Supplemental Marking. A supplemental tag or marking shall be supplied on the heat exchanger to caution the user if there are any restrictions on the design, testing, or operation of the heat exchanger. Supplemental marking shall be required for, but not limited to, the following:

UHX-19.2.1 Differential Design. The heat exchanger shall be marked "Differential Design" when one or more of its components is designed or tested using the differential design pressure (see UG-21).

UHX-19.2.2 Fixed Tubesheet Heat Exchangers. Fixed tubesheet heat exchangers shall be marked with a caution such as follows:

CAUTION: The Code required pressures and temperatures marked on the heat exchanger relate to the basic design conditions. The heat exchanger design has been evaluated for specific operating conditions and shall be re-evaluated before it is operated at different operating conditions.

UHX-20 EXAMPLES

Examples illustrating the use of the design rules given in this Part are shown as follows. The examples were

generated using computer software by performing the entire calculation without rounding off during each step. Accuracy of the final results beyond three significant figures is not intended or required.

UHX-20.1 Examples of UHX-12 for U-Tube Tubesheets

UHX-20.1.1 Example 1: Tubesheet Integral With Shell and Channel

UHX-20.1.1(a) Given. A U-tube heat exchanger With the tubesheet construction in accordance with configuration a as shown in Fig UHX-12.1, sketch (a).

UHX-20.1.1(a)(1) The shell side design conditions are −10 and 60 psi at 500°F.

UHX-20.1.1(a)(2) The tube side design conditions are −15 and 140 psi at 500°F.

UHX-20.1.1(a)(3) The tube material is SA-249 S31600 (Stainless Steel 316). The tubes are 0.75 in. outside diameter and 0.065 in. thick and are to be full-strength welded with no credit taken for expansion.

UHX-20.1.1(a)(4) The tubesheet material is SA-240 S31600 (Stainless Steel 316) with no corrosion allowance on the tube side and no pass partition grooves. The tubesheet outside diameter is 12.939 in. The tubesheet has 76 tube holes on a 1.0 in. square pattern with one centerline pass lane. The largest center-to-center distance between adjacent tube rows is 2.25 in., and the radius to the outermost tube hole center is 5.438 in.

UHX-20.1.1(a)(5) The shell material is SA-312 S31600 (Stainless Steel 316) welded pipe. The shell inside diameter is 12.39 in. and the shell thickness is 0.18 in.

UHX-20.1.1(a)(6) The channel material is SA-240 S31600 (Stainless Steel 316). The channel inside diameter is 12.313 in. and the channel thickness is 0.313 in.

UHX-20.1.1(b) Data Summary. The data summary consists of those variables from the nomenclature (UHX-11.3 and UHX-12.3) that are applicable to this configuration.

UHX-20.1.1(b)(1) The data for UHX-11.3 is:

c_t = 0 in.
d_t = 0.75 in.
E = 25.8 × 10^6 psi from Table TM-1 of Section II, Part D at 500°F
E_t = 25.8 × 10^6 psi from Table TM-1 of Section II, Part D at 500°F
h_g = 0 in.
p = 1.0 in.
r_o = 5.438 in.
S = 18,000 psi from Table 1A of Section II, Part D at 500°F
S_t = 18,000 psi from Table 1A of Section II, Part D at 500°F (for seamless tube, SA-213)
t_t = 0.065 in.
U_{L1} = 2.25 in.
ρ = 0 for no tube expansion

UHX-20.1.1(b)(2) The data for UHX-12.3 is:

A = 12.939 in.
D_c = 12.313 in.
D_s = 12.39 in.
E = 25.8 × 10^6 psi from Table TM-1 of Section II, Part D at 500°F
E_c = 25.8 × 10^6 psi from Table TM-1 of Section II, Part D at 500°F
E_s = 25.8 × 10^6 psi from Table TM-1 of Section II, Part D at 500°F
P_s = 60 psi and −10 psi
P_t = 140 psi and −15 psi
S = 18,000 psi from Table 1A of Section II, Part D at 500°F
S_c = 18,000 psi from Table 1A of Section II, Part D at 500°F
S_s = 18,000 psi from Table 1A of Section II, Part D at 500°F (for seamless pipe, SA-312)
t_c = 0.313 in.
t_s = 0.18 in.
v_s = 0.3
v_c = 0.3

UHX-20.1.1(c) Calculation Results. The calculation results are shown for loading case 3 where P_s=−10 psi and P_t=140 psi since this case yields the greatest value of σ.

UHX-20.1.1(c)(1) Step 1. Calculate D_o, μ, μ^*, and h'_g from UHX-11.5.1. A05

D_o = 11.6 in.
L_{L1} = 11.6 in.
A_L = 26.2 $in.^2$
μ = 0.25
d^* = 0.75 in.
p^* = 1.15 in.
μ^* = 0.349
h'_g = 0 in.

UHX-20.1.1(c)(2) Step 2. Calculate ρ_s, ρ_c, and M_{TS} for configuration a.

ρ_s = 1.07
ρ_c = 1.06
M_{TS} = −160 in.-lb/in.

UHX-20.1.1(c)(3) Step 3. Assume a value for h. Calculate h/p. Determine E^*/E and v^* from UHX-11.5.2. Calculate E^*.

h = 0.521 in.
h/p = 0.521
E^*/E = 0.445

$\nu^* = 0.254$
$E^* = 11.5 \times 10^6$ psi

A05 *UHX-20.1.1(c)(4) Step 4.* For configuration a, calculate β_s, k_s, λ_s, δ_s, and ω_s for the shell and β_c, k_c, λ_c, δ_c, and ω_c for the channel.

$\beta_s = 1.21$ in.$^{-1}$
$k_s = 33{,}300$ lb
$\lambda_s = 32.0 \times 10^6$ psi
$\delta_s = 7.02 \times 10^{-6}$ in.^{3}/lb
$\omega_s = 0.491$ in.^{2}
$\beta_c = 0.914$ in.$^{-1}$
$k_c = 132{,}000$ lb
$\lambda_c = 110 \times 10^6$ psi
$\delta_c = 3.99 \times 10^{-6}$ in.^{3}/lb
$\omega_c = 0.756$ in.^{2}

UHX-20.1.1(c)(5) Step 5. Calculate K and F for configuration a.

$K = 1.11$
$F = 9.41$

UHX-20.1.1(c)(6) Step 6. Calculate M^* for configuration a.

$M^* = -49.4$ in.-lb/in.

UHX-20.1.1(c)(7) Step 7. Calculate M_p, M_o, and M.

$M_p = 568$ in.-lb/in.
$M_o = -463$ in.-lb/in.
$M = 568$ in.-lb/in.

UHX-20.1.1(c)(8) Step 8. Calculate σ.

$\sigma = 36{,}000$ psi $\le 2S = 36{,}000$ psi

UHX-20.1.1(c)(9) Step 9. Calculate τ.

$\tau = 3350$ psi $\le 0.8S = 14{,}400$ psi

UHX-20.1.1(c)(10) Step 10. For configuration a, calculate $\sigma_{s,m}$, $\sigma_{s,b}$, and σ_s for the shell and $\sigma_{c,m}$, $\sigma_{c,b}$, and σ_c for the channel. The shell thickness shall be 0.18 in. for a minimum length of 2.69 in. adjacent to the tubesheet and the channel thickness shall be 0.313 in. for a minimum length of 3.53 in. adjacent to the tubesheet.

$\sigma_{s,m} = -170$ psi
$\sigma_{s,b} = -17{,}600$ psi
$\sigma_s = 17{,}700$ psi $\le 1.5S_s = 27{,}000$ psi
$\sigma_{c,m} = 1{,}340$ psi
$\sigma_{c,b} = 25{,}300$ psi
$\sigma_c = 26{,}600$ psi $\le 1.5S_c = 27{,}000$ psi

The assumed value for h is acceptable and the shell and channel stresses are within the allowable stresses; therefore, the calculation procedure is complete.

UHX-20.1.2 Example 2: Tubesheet Gasketed with Shell and Channel

UHX-20.1.2(a) Given. A U-tube heat exchanger with the tubesheet construction in accordance with configuration d as shown in Fig UHX-12.1, sketch (d).

UHX-20.1.2(a)(1) The shell side design conditions are −15 and 10 psi at 300°F.

UHX-20.1.2(a)(2) The tube side design condition is 135 psi at 300°F.

UHX-20.1.2(a)(3) The tube material is SB-111 C44300 (Admiralty). The tubes are 0.625 in. outside diameter and 0.065 in. thick and are to be expanded for the full thickness of the tubesheet.

UHX-20.1.2(a)(4) The tubesheet material is SA-285, Grade C (K02801) with a 0.125 in. corrosion allowance on the tube side and no pass partition grooves. The tubesheet outside diameter is 20.0 in. The tubesheet has 386 tube holes on a 0.75 in. equilateral triangular pattern with one centerline pass lane. The largest center-to-center distance between adjacent tube rows is 1.75 in., and the radius to the outermost tube hole center is 8.094 in.

UHX-20.1.2(a)(5) The diameter of the shell gasket load reaction is 19.0 in. and the shell flange design bolt load is 147,000 lb.

UHX-20.1.2(a)(6) The diameter of the channel gasket load reaction is 19.0 in. and the channel flange design bolt load is 162,000 lb.

UHX-20.1.2(b) Data Summary. The data summary consists of those variables from the nomenclature (UHX-11.3 and UHX-12.3) that are applicable to this configuration.

UHX-20.1.2(b)(1) The data for UHX-11.3 is:

$c_t = 0.125$ in.
$d_t = 0.625$ in.
$E = 28.3 \times 10^6$ psi from Table TM-1 of Section II, Part D at 300°F
$E_t = 15.4 \times 10^6$ psi from Table TM-3 of Section II, Part D at 300°F
$h_g = 0$ in.
$p = 0.75$ in.
$r_o = 8.094$ in.
$S = 15{,}700$ psi from Table 1A of Section II, Part D at 300°F
$S_t = 10{,}000$ psi from Table 1B of Section II, Part D at 300°F
$t_t = 0.065$ in.
$U_{L1} = 1.75$ in.
$\rho = 1.0$ for a full length tube expansion

UHX-20.1.2(b)(2) The data for UHX-12.3 is:

$A = 20.0$ in.
$E = 28.3 \times 10^6$ psi from Table TM-1 of Section II, Part D at 300°F

$\omega_c^* = 3.37$ in.^{2}
$\gamma_b = 0$
$P_s^* = 0$ psi
$P_c^* = 0$ psi

UHX-20.3.3(d)(6) Step 6

P_e = 59.2 psi, −50.7 psi, and 8.46 psi for loading cases 1, 2, and 3 respectively

UHX-20.3.3(d)(7) Step 7

Case	Q_2, in.-lb/in.	Q_3	F_m	$\lvert\sigma\rvert$, psi
1	−548	0.0661	0.0575	11,400
2	469	0.0661	0.0575	9,780
3	−78.2	0.0661	0.0575	1,630

For all loading cases the absolute value of the tubesheet bending stress $|\sigma| \le 1.5S = 23{,}700$ psi and is acceptable.

The calculation procedure is complete and the unit geometry is acceptable for the given design conditions.

UHX-20.4 REDESIGNATED AS L-10.1 **A05**

UHX-20.5 REDESIGNATED AS L-10.2 **A05**

MANDATORY APPENDICES

MANDATORY APPENDIX 1
SUPPLEMENTARY DESIGN FORMULAS

1-1 THICKNESS OF CYLINDRICAL AND SPHERICAL SHELLS

(a) The following formulas, in terms of the outside radius, are equivalent to and may be used instead of those given in UG-27(c) and (d).

(1) For cylindrical shells (circumferential stress),

$$t = \frac{PR_o}{SE + 0.4P} \quad \text{or} \quad P = \frac{SEt}{R_o - 0.4t} \qquad (1)$$

where

R_o = outside radius of the shell course under consideration

(2) For spherical shells,

$$t = \frac{PR_o}{2SE + 0.8P} \quad \text{or} \quad P = \frac{2SEt}{R_o - 0.8t} \qquad (2)$$

Other symbols are as defined in UG-27.

1-2 THICK CYLINDRICAL SHELLS

(a)(1) Circumferential Stress (Longitudinal Joints). When the thickness of the cylindrical shell under internal design pressure exceeds one-half of the inside radius, or when P exceeds $0.385SE$, the following formulas shall apply:

When P is known and t is desired,

$$t = R(Z^{1/2} - 1) = R_o \frac{(Z^{1/2} - 1)}{Z^{1/2}} \qquad (1)$$

where

$$Z = \frac{SE + P}{SE - P}$$

Where t is known and P is desired,

$$P = SE\left(\frac{Z - 1}{Z + 1}\right) \qquad (2)$$

where

$$Z = \left(\frac{R + t}{R}\right)^2 = \left(\frac{R_o}{R}\right)^2 = \left(\frac{R_o}{R_o - t}\right)^2$$

(2) Longitudinal Stress (Circumferential Joints). When the thickness of the cylindrical shell under internal design pressure exceeds one-half of the inside radius, or when P exceeds $1.25SE$, the following formulas shall apply:

When P is known and t is desired,

$$t = R\,(Z^{1/2} - 1) = R_o\left(\frac{Z^{1/2} - 1}{Z^{1/2}}\right) \qquad (3)$$

where

$$Z = \left(\frac{P}{SE} + 1\right)$$

When t is known and P is desired,

$$P = SE(Z - 1) \qquad (4)$$

where

$$Z = \left(\frac{R + t}{R}\right)^2 = \left(\frac{R_o}{R}\right)^2 = \left(\frac{R_o}{R_o - t}\right)^2$$

Symbols are as defined in UG-27 and 1-1.

1-3 THICK SPHERICAL SHELLS

When the thickness of the shell of a wholly spherical vessel or of a hemispherical head under internal design

pressure exceeds $0.356R$, or when P exceeds $0.665SE$, the following formulas shall apply:

When P is known and t is desired,

$$t = R(Y^{1/3} - 1) = R_o\left(\frac{Y^{1/3} - 1}{Y^{1/3}}\right) \quad (1)$$

where

$$Y = \frac{2(SE + P)}{2SE - P}$$

When t is known and P is desired,

$$P = 2SE\left(\frac{Y - 1}{Y + 2}\right) \quad (2)$$

where

$$Y = \left(\frac{R + t}{R}\right)^3 = \left(\frac{R_o}{R_o - t}\right)^3$$

Symbols are as defined in UG-27 and 1-1.

A05 1-4 FORMULAS FOR THE DESIGN OF FORMED HEADS UNDER INTERNAL PRESSURE

(a) The formulas of this paragraph provide for the design of formed heads of proportions other than those given in UG-32, in terms of inside and outside diameter.

The formulas in 1-4(c) and (d) given below shall be used for $t/L \geq 0.002$. For $t/L < 0.002$, the rules of 1-4(f) shall also be met.

(b) The symbols defined below are used in the formulas of this paragraph (see Fig. 1-4):

t = minimum required thickness of head after forming

t_s = minimum specified thickness of head after forming, in. (mm). t_s shall be $\geq t$.

P = internal design pressure (see UG-21)

D = inside diameter of the head skirt; or inside length of the major axis of an ellipsoidal head; or inside diameter of a cone head at the point under consideration measured perpendicular to the longitudinal axis

D_o = outside diameter of the head skirt; or outside length of the major axis of an ellipsoidal head; or outside diameter of a cone head at the point under consideration measured perpendicular to the longitudinal axis

S = maximum allowable working stress, as given in Subsection C except as limited by footnote 1 to 1-4(c) and (d), UG-24, UG-32(e), and UW-12.

E = lowest efficiency of any Category A joint in the head (for hemispherical heads this includes head-to-shell joint). For welded vessels, use the efficiency specified in UW-12.

r = inside knuckle radius

L = inside spherical or crown radius for torispherical and hemispherical heads

$L = K_1D$ for ellipsoidal heads in which K_1 is obtained from Table UG-37

L_o = outside spherical or crown radius

L/r = ratio of the inside crown radius to the inside knuckle radius, used in Table 1-4.2

M = a factor in the formulas for torispherical heads depending on the head proportion L/r

h = one-half of the length of the minor axis of the ellipsoidal head, or the inside depth of the ellipsoidal head measured from the tangent line (head-bend line)

K = a factor in the formulas for ellipsoidal heads depending on the head proportion $D/2h$

$D/2h$ = ratio of the major to the minor axis of ellipsoidal heads, which equals the inside diameter of the skirt of the head divided by twice the inside height of the head, and is used in Table 1-4.1

α = one-half of the included (apex) angle of the cone at the center line of the head

E_T = modulus of elasticity at maximum design temperature, psi. The value of E_T shall be taken from applicable Table TM, Section II, Part D

S_y = yield strength at maximum design temperature, psi. The value of S_y shall be taken from application Table Y-1, Section II, Part D

(c) Ellipsoidal Heads[1]

$$t = \frac{PDK}{2SE - 0.2P} \text{ or } P = \frac{2SEt}{KD + 0.2t} \quad (1)$$

$$t = \frac{PD_oK}{2SE + 2P(K - 0.1)}$$

or

$$P = \frac{2SEt}{KD_o - 2t(K - 0.1)} \quad (2)$$

[1] Ellipsoidal heads designed under $K > 1.0$ and all torispherical heads made of materials having a specified minimum tensile strength exceeding 70,000 psi (482 MPa) shall be designed using a value of S equal to 20,000 psi (138 MPa) at room temperature and reduced in proportion to the reduction in maximum allowable stress values at temperature for the material as shown in the appropriate table (see UG-23).

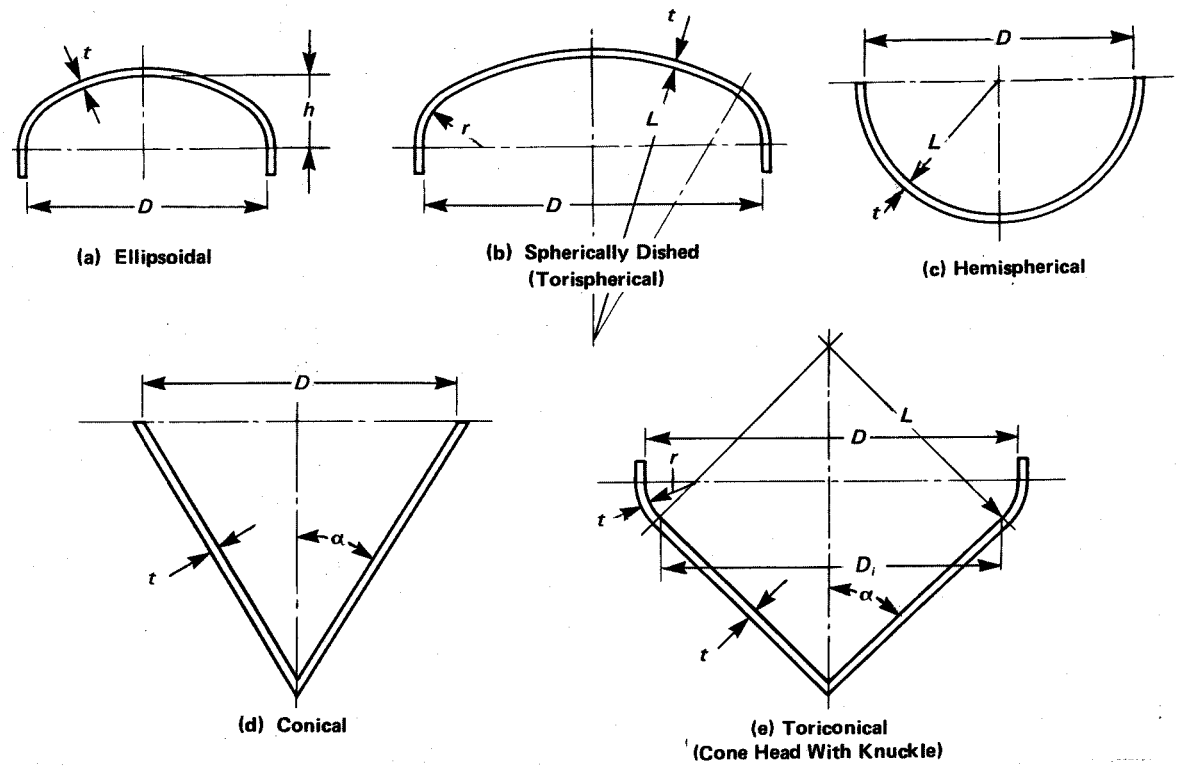

FIG. 1-4 PRINCIPAL DIMENSIONS OF TYPICAL HEADS

TABLE 1-4.1
VALUES OF FACTOR K
(Use Nearest Value of $D/2h$; Interpolation Unnecessary)

$D/2h$	3.0	2.9	2.8	2.7	2.6	2.5	2.4	2.3	2.2	2.1	2.0
K	1.83	1.73	1.64	1.55	1.46	1.37	1.29	1.21	1.14	1.07	1.00
$D/2h$	1.9	1.8	1.7	1.6	1.5	1.4	1.3	1.2	1.1	1.0	. . .
K	0.93	0.87	0.81	0.76	0.71	0.66	0.61	0.57	0.53	0.50	. . .

where

$$K = \frac{1}{6}\left[2 + \left(\frac{D}{2h}\right)^2\right]$$

Numerical values of the factor K are given in Table 1-4.1.

Example 1.[2] Determine the required thickness t of a seamless ellipsoidal head, exclusive of provision for corrosion for the following conditions:

D = 40 in; h = 9 in; P = 200 psi; S = 13,750 psi; E = 1.00.

$$\frac{D}{2h} = \frac{40}{18} = 2.22$$

From Table 1-4.1, K = 1.14. Substituting in Eq. (1),

$$t = \frac{200 \times 40 \times 1.14}{[2 \times 13{,}750 \times (1.00) - (0.2 \times 200)]} = 0.33 \text{ in.}$$

Example 2.[2] Determine the maximum allowable working pressure P of a seamless ellipsoidal head for the following conditions:

D = 30 in.; h = 7.5 in.; total thickness = ½ in. with no allowance for corrosion; maximum operating temperature = 800°F; E = 1.00.

From the appropriate table given in Subpart 1 of Section II, Part D, S = 10,200 psi.

[2] This calculation is intended only to illustrate the use of the formula herein. Other paragraphs in this Division may have to be satisfied to permit use of the full tabular stress value.

TABLE 1-4.2
VALUES OF FACTOR M
(Use Nearest Value of L/r; Interpolation Unnecessary)

L/r	1.0	1.25	1.50	1.75	2.00	2.25	2.50	2.75	3.00	3.25	3.50
M	1.00	1.03	1.06	1.08	1.10	1.13	1.15	1.17	1.18	1.20	1.22
L/r	4.0	4.5	5.0	5.5	6.0	6.5	7.0	7.5	8.0	8.5	9.0
M	1.25	1.28	1.31	1.34	1.36	1.39	1.41	1.44	1.46	1.48	1.50
L/r	9.5	10.00	10.5	11.0	11.5	12.0	13.0	14.0	15.0	16.0	$16\frac{2}{3}$[1]
M	1.52	1.54	1.56	1.58	1.60	1.62	1.65	1.69	1.72	1.75	1.77

NOTE:
(1) Maximum ratio allowed by UG-32(j) when L equals the outside diameter of the skirt of the head.

$$\frac{D}{2h} = \frac{30}{15} = 2.0$$

From Table 1-4.1, $K = 1.0$. Substituting in Eq. (1),

$$P = \frac{2 \times 10{,}200 \times 1.0 \times 0.5}{[1 \times 30 + (0.2 \times 0.5)]} = 339 \text{ psi}$$

(d) Torispherical Heads[1]

$$t = \frac{PLM}{2SE - 0.2P} \quad \text{or} \quad P = \frac{2SEt}{LM + 0.2t} \qquad (3)$$

$$t = \frac{PL_oM}{2SE + P(M - 0.2)}$$

or

$$P = \frac{2SEt}{ML_o - t(M - 0.2)} \qquad (4)$$

where

$$M = \tfrac{1}{4}\left(3 + \sqrt{\frac{L}{r}}\right)$$

Numerical values of the factor M are given in Table 1-4.2.

Example 1.[2] Determine the required thickness t, exclusive of allowance for corrosion, of a torispherical head for the following conditions:

$D = 40$ in.; $L = 40$ in.; $r = 4$ in.; $P = 200$ psi; $S = 13{,}750$ psi; $E = 1.00$ (seamless head).

$$\frac{L}{r} = \frac{40}{4} = 10$$

and from Table 1-4.2, $M = 1.54$. Substituting in Eq. (3),

$$t = \frac{200 \times 40 \times 1.54}{[2 \times 13{,}750 \times (1.00) - (0.2 \times 200)]} = 0.45 \text{ in.}$$

Example 2.[2] Determine the maximum allowable working pressure P of a torispherical head for the following conditions:

$D = 30$ in.; $L = 24$ in.; $r = 2.00$ in.; $E = 1.00$ (seamless head); total thickness = 0.5 in. with no allowance for corrosion; material conforms to SA-515 Grade 70; maximum operating temperature = 900°F.

From the appropriate table given in Subpart 1 of Section II, Part D, $S = 6500$ psi.

$$\frac{L}{r} = \frac{24}{2.00} = 12.0$$

From Table 1-4.2, $M = 1.62$. Substituting in Eq. (3),

$$P = \frac{2 \times 6500 \times 1.0 \times 0.5}{24 \times 1.62 + 0.2 \times 0.5} = 167 \text{ psi}$$

(e) Conical Heads

$$t = \frac{PD}{2 \cos \alpha \, (SE - 0.6P)}$$

or

$$P = \frac{2SEt \cos \alpha}{D + 1.2t \cos \alpha} \qquad (5)$$

$$t = \frac{PD_o}{2 \cos \alpha \, (SE + 0.4P)}$$

or

$$P = \frac{2SEt \cos \alpha}{D_o - 0.8t \cos \alpha} \qquad (6)$$

(f) Design of Heads With $t_s/L < 0.002$. The following rules shall be used when the maximum design temperature is less than or equal to the temperature limit given in Table 1-4.3. See U-2(g) for maximum design temperature exceeding the temperature limit given in Table 1-4.3 04 A05

(1) Torispherical Heads With $t_s/L < 0.002$. The minimum required thickness of a torispherical head having $0.0005 \le t_s/L < 0.002$ shall be larger of the thickness calculated by the formulas in UG-32(e), 1-4(d), or by the formulas given below.

TABLE 1-4.3 MAXIMUM METAL TEMPERATURE

Table in Which Material is Listed	Temperature, °F
UCS-23	700
UNF-23.1	300
UNF-23.2	150
UNF-23.3	900
UNF-23.4	600
UNF-23.5	600
UHA-23	800
UHT-23	700

TABLE 1-4.4 VALUES OF KNUCKLE RADIUS, "r"

D/2h	r/D
3.0	0.10
2.8	0.11
2.6	0.12
2.4	0.13
2.2	0.15
2.0	0.17
1.8	0.20
1.6	0.24
1.4	0.29
1.2	0.37
1.0	0.50

GENERAL NOTE: Interpolation permitted for intermediate values.

(a) Calculate a coefficient, C_1.

$$C_1 = 9.31r/D - 0.086, \text{ for } r/D \le 0.08$$

$$C_1 = 0.692r/D + 0.605, \text{ for } r/D > 0.08$$

(b) Calculate the elastic buckling stess, S_e.

$$S_e = C_1 E_T (t_s/r)$$

(c) Calculate a coefficient, C_2.

$$C_2 = 1.25, \text{ for } r/D \le 0.08$$

$$C_2 = 1.46 - 2.6r/D, \text{ for } r/D > 0.08$$

(d) Calculate values of constants a, b, β, *and* φ.

$$a = 0.5D - r$$

$$b = L - r$$

$$\beta = \text{arc cos } (a/b), \text{ radians}$$

$$\varphi = (\sqrt{Lt_s})/r$$

(e) Calculate the value of c.

If φ is less than β, then

$$c = a/[\cos(\beta - \varphi)]$$

If φ is equal to or greater than β, then

$$c = a$$

Determine the value of R_e.

$$R_e = c + r$$

(f) Calculate the value of internal pressure expected to produce elastic buckling, P_e.

$$P_e = \frac{S_e t_s}{C_2 R_e[(0.5R_e/r) - 1]}$$

(g) Calculate the value of internal pressure expected to result in yield stress at the point of maximum stress, P_y.

$$P_y = \frac{S_y t_s}{C_2 R_e[(0.5R_e/r) - 1]}$$

(h) Calculate the value of internal pressure expected to result in knuckle failure, P_{ck}.

$$P_{ck} = 0.6P_e, \text{ for } P_e/P_y \le 1.0$$

$$P_{ck} = 0.408P_y + 0.192P_e, \text{ for } 1.0 < P_e/P_y \le 8.29$$

$$P_{ck} = 2.0P_y, \text{ for } P_e/P_y > 8.29$$

(i) Calculate the value $P_{ck}/1.5$. If $P_{ck}/1.5$ is equal to or greater than the required internal design pressure P, then the design is complete. If $P_{ck}/1.5$ is less than the required internal design pressure P, then increase the thickness and repeat the calculations.

(2) Design of Ellipsoidal Heads With $t_s/L < 0.002$. The minimum required thickness of an ellipsoidal head having $0.0005 \le t_s/L < 0.002$ shall be larger of the thicknesses calculated by the formulas in UG-32(d), 1-4(c), or by the formulas in 1-4(f)(1). In using 1-4(f)(1) formulas, the value of L is to be obtained from Table UG-37 and the value of r is to be obtained from Table 1-4.4.

1-5 RULES FOR CONICAL REDUCER SECTIONS AND CONICAL HEADS UNDER INTERNAL PRESSURE

(a) The formulas of (d) and (e) below provide for the design of reinforcement, if needed, at the cone-to-cylinder junctions for conical reducer sections and conical heads where all the elements have a common axis and the half-apex angle $\alpha \le 30$ deg. Subparagraph (g) below provides for special analysis in the design of cone-to-cylinder intersections with or without reinforcing rings where α is greater than 30 deg.

In the design of reinforcement for a cone-to-cylinder juncture, the requirements of UG-41 shall be met.

(b) Nomenclature

A_{rL} = required area of reinforcement at large end of cone

A_{rs} = required area of reinforcement at small end of cone
A_{eL} = effective area of reinforcement at large end intersection
A_{es} = effective area of reinforcement at small end intersection
E_s = modulus of elasticity of cylinder material
E_c = modulus of elasticity of cone material
E_r = modulus of elasticity of reinforcing ring material

NOTE: The modulus of elasticity shall be taken from the applicable Table TM in Section II, Part D. When a material is not listed in the TM tables, the requirements of U-2(g) shall be applied.

E_1 = efficiency of longitudinal joint in cylinder. For compression (such as at large end of cone), $E_1 = 1.0$ for butt welds.
E_2 = efficiency of longitudinal joint in cone. For compression, $E_2 = 1.0$ for butt welds.
f_1 = axial load per unit circumference at large end due to wind, dead load, etc., excluding pressure
f_2 = axial load per unit circumference at small end due to wind, dead load, etc., excluding pressure
P = internal design pressure (see UG-21)
Q_L = algebraical sum of $PR_L/2$ and f_1
Q_s = algebraical sum of $PR_s/2$ and f_2
R_s = inside radius of small cylinder at small end of cone
R_L = inside radius of large cylinder at large end of cone
S_s = allowable stress of cylinder material at design temperature
S_c = allowable stress of cone material at design temperature
S_r = allowable stress of reinforcing ring material at design temperature
t = minimum required thickness of cylinder at cone-to-cylinder junction
t_c = nominal thickness of cone at cone-to-cylinder junction
t_r = minimum required thickness of cone at cone-to-cylinder junction
t_s = nominal thickness of cylinder at cone-to-cylinder junction
α = half-apex angle of cone or conical section, deg.
Δ = angle indicating need for reinforcement at cone-to-cylinder junction having a half-apex angle $\alpha \leq 30$ deg. When $\Delta \geq \alpha$, no reinforcement is required at the junction (see Tables 1-5.1 and 1-5.2), deg.
y = cone-to-cylinder factor
= S_sE_s for reinforcing ring on shell
= S_cE_c for reinforcing ring on cone

TABLE 1-5.1
VALUES OF Δ FOR JUNCTIONS AT THE LARGE CYLINDER FOR $\alpha \leq 30$ deg

P/S_sE_1	0.001	0.002	0.003	0.004	0.005
Δ, deg	11	15	18	21	23
P/S_sE_1	0.006	0.007	0.008	0.009[1]	...
Δ, deg	25	27	28.5	30	...

NOTE:
(1) Δ = 30 deg for greater values of P/S_sE_1.

TABLE 1-5.2
VALUES OF Δ FOR JUNCTIONS AT THE SMALL CYLINDER FOR $\alpha \leq 30$ deg

P/S_sE_1	0.002	0.005	0.010	0.02
Δ, deg	4	6	9	12.5
P/S_sE_1	0.04	0.08	0.10	0.125[1]
Δ, deg	17.5	24	27	30

NOTE:
(1) Δ = 30 deg for greater values of P/S_sE_1.

(c) For a cone-to-cylinder junction, the following values shall be determined at large end and again at the small end in order that both the large end and the small end can be examined:

Determine P/S_sE_1 and then determine Δ at the large end and at the small end, as appropriate, from Tables 1-5.1 and 1-5.2.

Determine k:

k = 1 when additional area of reinforcement is not required
= y/S_rE_r when a stiffening ring is required, but k is not less than 1.0

(d) Reinforcement shall be provided at the junction of the cone with the large cylinder for conical heads and reducers without knuckles when the value of Δ obtained from Table 1-5.1, using the appropriate ratio P/S_sE_1, is less than α. Interpolation may be made in the Table.

The required area of reinforcement shall be at least equal to that indicated by the following formula when Q_L is in tension:

$$A_{rL} = \frac{kQ_LR_L}{S_sE_1}\left(1 - \frac{\Delta}{\alpha}\right)\tan\alpha \qquad (1)$$

At the large end of the cone-to-cylinder juncture, the $PR_L/2$ term is in tension. When f_1 is in compression and the quantity is larger than the $PR_L/2$ term, the design shall be in accordance with U-2(g). The calculated localized stresses at the discontinuity shall not

exceed the stress values specified in 1-5(g)(1) and (2).

The effective area of reinforcement can be determined in accordance with the following formula:

$$A_{eL} = (t_s - t)\sqrt{R_L t_s} + (t_c - t_r)\sqrt{R_L t_c/\cos\alpha} \qquad (2)$$

Any additional area of reinforcement which is required shall be situated within a distance of $\sqrt{R_L t_s}$ from the junction of the reducer and the cylinder. The centroid of the added area shall be within a distance of 0.25 $\times \sqrt{R_L t_s}$ from the junction.

(e) Reinforcement shall be provided at the junction of the conical shell of a reducer without a flare and the small cylinder when the value of Δ obtained from Table 1-5.2, using the appropriate ratio P/S_sE_1, is less than α.

The required area of reinforcement shall be at least equal to that indicated by the following formula when Q_s is in tension:

$$A_{rs} = \frac{kQ_sR_s}{S_sE_1}\left(1 - \frac{\Delta}{\alpha}\right)\tan\alpha \qquad (3)$$

At the small end of the cone-to-cylinder juncture, the $PR_s/2$ term is in tension. When f_2 is in compression and the quantity is larger than the $PR_s/2$ term, the design shall be in accordance with U-2(g). The calculated localized stresses at the discontinuity shall not exceed the stress values specified in 1-5(g)(1) and (2).

The effective area of reinforcement can be determined in accordance with the following formula:

$$A_{es} = 0.78\sqrt{R_s t_s}[(t_s - t) + (t_c - t_r)/\cos\alpha] \qquad (4)$$

Any additional area of reinforcement which is required shall be situated within a distance of $\sqrt{R_s t_s}$ from the junction, and the centroid of the added area shall be within a distance of 0.25 $\sqrt{R_s t_s}$ from the junction.

(f) Reducers not described in UG-36(e)(5), such as those made up of two or more conical frustums having different slopes, may be designed in accordance with (g).

(g) When the half-apex angle α is greater than 30 deg (0.52 rad), cone-to-cylinder junctions without a knuckle may be used, with or without reinforcing rings, if the design is based on special analysis, such as the beam-on-elastic-foundation analysis of Timoshenko, Hetenyi, or Watts and Lang. See U-2(g). When such an analysis is made, the calculated localized stresses at the discontinuity shall not exceed the following values.

(1) (Membrane hoop stress) + (average discontinuity hoop stress) shall not be greater than 1.5S, where the "average discontinuity hoop stress" is the average hoop stress across the wall thickness due to the discontinuity at the junction, disregarding the effect of Poisson's ratio times the longitudinal stress at the surfaces.

(2) (Membrane longitudinal stress) + (discontinuity longitudinal stress due to bending) shall not be greater than S_{PS} [see UG-23(e)].

The angle joint (see 3-2) between the cone and cylinder shall be designed equivalent to a double butt-welded joint, and because of the high bending stress, there shall be no weak zones around the angle joint. The thickness of the cylinder may have to be increased to limit the difference in thickness so that the angle joint has a smooth contour.

1-6 DISHED COVERS (BOLTED HEADS) A05

(a) Dished heads with bolting flanges, both concave and convex to the pressure and conforming to the several types illustrated in Fig. 1-6, shall be designed in accordance with the formulas which follow.

(b) The symbols used in the formulas of this paragraph are defined as follows:

t = minimum required thickness of head plate after forming

L = inside spherical or crown radius

r = inside knuckle radius

P = internal pressure (see UG-21) for the pressure on concave side, and external pressure for the pressure on convex side [see UG-28(f)]

S = maximum allowable stress value (see UG-23)

T = flange thickness

M_o = the total moment determined as in 2-6 for heads concave to pressure and 2-11 for heads convex to pressure; except that for heads of the type shown in Fig. 1-6 sketch (d), H_D and h_D shall be as defined below, and an additional moment $H_r h_r$ (which may add or subtract) shall be included where

H_r = radial component of the membrane load in the spherical segment acting at the intersection of the inside of the flange ring with the center line of the dished cover thickness

= $H_D \cot \beta_1$

h_r = lever arm of force H_r about centroid of flange ring

H_D = axial component of the membrane load in the spherical segment acting at the inside of the flange ring

= $0.785\ B^2P$

h_D = radial distance from the bolt circle to the inside of the flange ring

β_1 = angle formed by the tangent to the center line of the dished cover thickness at its point of intersection with the flange ring, and a line perpendicular to the axis of the dished cover

$$= \text{arc sin}\left(\frac{B}{2L + t}\right)$$

NOTE: Since H, h_r in some cases will subtract from the total moment, the moment in the flange ring when the internal pressure is zero may be the determining loading for flange design.

A = outside diameter of flange
B = inside diameter of flange
C = bolt circle, diameter

(c) It is important to note that the actual value of the total moment M_o may calculate to be either plus or minus for both the heads concave to pressure and the heads convex to pressure. However, for use in all of the formulas which follow, the absolute values for both P and M_o are used.

A05 *(d)* Heads of the type shown in Fig. 1-6 sketch (a):

(1) the thickness of the head t shall be determined by the appropriate formula in UG-32 for pressure on concave side, and UG-33 for pressure on convex side; the thickness of the skirt shall be determined by the formula for cylindrical shell in UG-27 for pressure on concave side and UG-28 for pressure on convex side;

(2) the head radius L or the knuckle radius r shall comply with the limitations given in UG-32;

(3) the flange shall comply at least with the requirements of Fig. 2-4 and shall be designed in accordance with the provisions of 2-1 through 2-7 for pressure on concave side, and 2-11 for pressure on convex side. (Within the range of flange standards listed in Table U-3, the flange and drillings may conform to the standards, and the thickness specified therein shall be considered as a minimum requirement.)

(e) Heads of the type shown in Fig. 1-6 sketch (b) (no joint efficiency factor is required):

(1) head thickness

(a) for pressure on concave side,

$$t = \frac{5PL}{6S} \quad (1)$$

(b) for pressure on convex side, the head thickness shall be determined based on UG-33(c) using the outside radius of the spherical head segment;

(2) flange thickness for ring gasket

$$T = \sqrt{\frac{M_o}{SB}\left[\frac{A + B}{A - B}\right]} \quad (2)$$

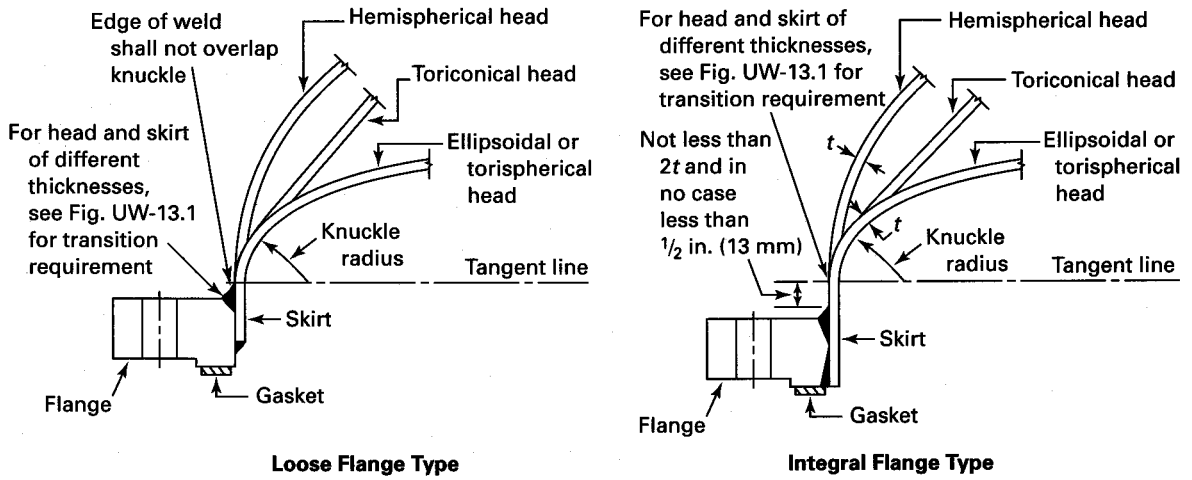

(a)

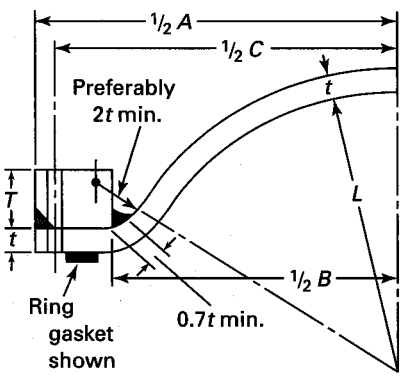

(b)

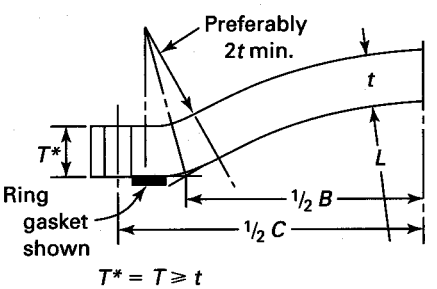

(c)

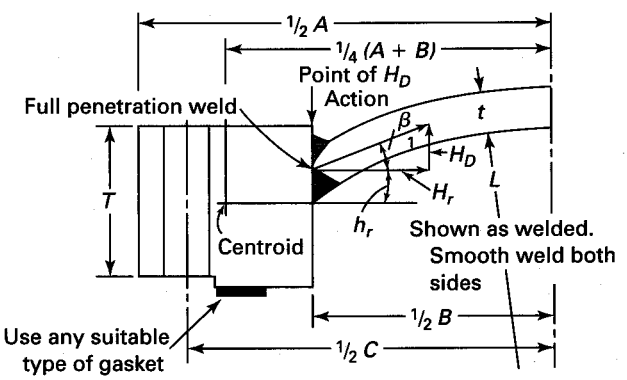

(d)

FIG. 1-6 DISHED COVERS WITH BOLTING FLANGES A05

for the shell and stiffening ring, use the material chart resulting in the larger value of A in Step 4 below.

Step 3. Move horizontally to the left to the material/temperature line for the design metal temperature. For values of B falling below the left end of the material/temperature line, see Step 5 below.

Step 4. Move vertically to the bottom of the chart and read the value of A.

Step 5. For values of B falling below the left end of the material/temperature line for the design temperature, the value of A can be calculated using the formula $A = 2B/E_x$. For value of B above the material/temperature line for the design temperature, the design shall be either per U-2(g) or by changing the cone or cylinder configuration, stiffening ring location on the shell, and/or reducing the axial compressive force to reduce the B value to below or at the material/temperature line for the design temperature. For values of B having multiple values of A, such as when B falls on a horizontal portion of the curve, the smallest value of A shall be used.

Step 6. Compute the value of the required moment of inertia from the formulas for I_s or I'_s.

For the circumferential stiffening ring only,

$$I_s = \frac{AD_s^2A_{TS}}{14.0}$$

For the shell-cone or ring-shell-cone section,

$$I'_s = \frac{AD_s^2A_{TS}}{10.9}$$

Step 7. Determine the available moment of inertia of the ring only I or the shell-cone or ring-shell-cone I'.

Step 8. When the ring only is used,

$$I \geq I_s$$

and when the shell-cone or ring-shell-cone is used:

$$I' \geq I'_s$$

If the equation is not satisfied, a new section with a larger moment of inertia must be selected, and the calculation shall be done again until the equation is met.

The requirements of UG-29(b), (c), (d), (e), and (f) and UG-30 are to be met in attaching stiffening rings to the shell.

(d) Reducers not described in UG-36(e)(5), such as those made up of two or more conical frustums having different slopes, may be designed in accordance with (e).

(e) When the half-apex angle α is greater than 60 deg. (1.1 rad), cone-to-cylinder junctions without a knuckle may be used, with or without reinforcing rings, if the design is based on special analysis, such as the beam-on-elastic-foundation analysis of Timoshenko, Hetenyi, or Watts and Lang. See U-2(g). The effect of shell and cone buckling on the required area and moment of inertia at the joint is to be taken into consideration in the analysis. When such an analysis is made, the calculated localized stresses at the discontinuity shall not exceed the following values.

(1) (Membrane hoop stress) + (average discontinuity hoop stress) shall not be greater than $1.5S$.

(2) (Membrane longitudinal stress) + (discontinuity longitudinal stress due to bending) shall not be greater than S_{PS} [see UG-23(e)], where the "average discontinuity hoop stress" is the average hoop stress across the wall thickness due to the discontinuity at the junction, disregarding the effect of Poisson's ratio times the longitudinal stress at the surfaces.

MANDATORY APPENDIX 2
RULES FOR BOLTED FLANGE CONNECTIONS WITH RING TYPE GASKETS

GENERAL

2-1 SCOPE

A05 *(a)* The rules in Appendix 2 apply specifically to the design of bolted flange connections with gaskets that are entirely within the circle enclosed by the bolt holes and with no contact outside this circle, and are to be used in conjunction with the applicable requirements in Subsections A, B, and C of this Division. These rules are not to be used for the determination of the thickness of supported or unsupported tubesheets integral with a bolting flange as illustrated in Fig. UW-13.2 sketches (h) through (l) or Fig. UW-13.3 sketch (c). Appendix S provides discussion on Design Considerations for Bolted Flanged Connections.

These rules provide only for hydrostatic end loads and gasket seating. The flange design methods outlined in 2-4 through 2-8 are applicable to circular flanges under internal pressure. Modifications of these methods are outlined in 2-9 and 2-10 for the design of split and noncircular flanges. See 2-11 for flanges with ring type gaskets subject to external pressure, 2-12 for flanges with nutstops, and 2-13 for reverse flanges. Rules for calculating rigidity factors for flanges are provided in para. 2-14. Recommendations for qualification of assembly procedures and assemblers are in para. 2-15. Proper allowance shall be made if connections are subject to external loads other than external pressure.

A05 *(b)* The design of a flange involves the selection of the gasket (material, type, and dimensions), flange facing, bolting, hub proportions, flange width, and flange thickness. See Note 1, 2-5(c)(1). Flange dimensions shall be such that the stresses in the flange, calculated in accordance with 2-7, do not exceed the allowable flange stresses specified in 2-8. Flanges designed to the rules of this Appendix shall also meet the rigidity requirements of para. 2-14. All calculations shall be made on dimensions in the corroded condition.

(c) It is recommended that bolted flange connections conforming to the standards listed in UG-44 be used for connections to external piping. These standards may be used for other bolted flange connections within the limits of size in the standards and the pressure–temperature ratings permitted in UG-44. The ratings in these standards are based on the hub dimensions given or on the minimum specified thickness of flanged fittings of integral construction. Flanges fabricated from rings may be used in place of the hub flanges in these standards provided that their strength, calculated by the rules in this Appendix, is not less than that calculated for the corresponding size of hub flange.

(d) Except as otherwise provided in (c) above, bolted flange connections for unfired pressure vessels shall satisfy the requirements in this Appendix.

(e) The rules of this Appendix should not be construed to prohibit the use of other types of flanged connections provided they are designed in accordance with good engineering practice and method of design is acceptable to the Inspector. Some examples of flanged connections which might fall in this category are as follows:

(1) flanged covers as shown in Fig. 1-6;

(2) bolted flanges using full-face gaskets;

(3) flanges using means other than bolting to restrain the flange assembly against pressure and other applied loads.

2-2 MATERIALS

(a) Materials used in the construction of bolted flange connections shall comply with the requirements given in UG-4 through UG-14.

(b) Flanges made from ferritic steel and designed in accordance with this Appendix shall be full-annealed, normalized, normalized and tempered, or quenched and tempered when the thickness of the flange section exceeds 3 in. (75 mm).

(c) Material on which welding is to be performed shall be proved of good weldable quality. Satisfactory qualification of the welding procedure under Section IX is considered as proof. Welding shall not be performed on steel

that has a carbon content greater than 0.35%. All welding on flange connections shall comply with the requirements for postweld heat treatment given in this Division.

(d) Fabricated hubbed flanges shall be in accordance with the following.

(1) Hubbed flanges may be machined from a hot rolled or forged billet or forged bar. The axis of the finished flange shall be parallel to the long axis of the original billet or bar. (This is not intended to imply that the axis of the finished flange and the original billet must be concentric.)

(2) Hubbed flanges [except as permitted in (1) above] shall not be machined from plate or bar stock material unless the material has been formed into a ring, and further provided that:

(a) in a ring formed from plate, the original plate surfaces are parallel to the axis of the finished flange. (This is not intended to imply that the original plate surface be present in the finished flange.)

(b) the joints in the ring are welded butt joints that conform to the requirements of this Division. Thickness to be used to determine postweld heat treatment and radiography requirements shall be the lesser of

$$t \text{ or } \frac{(A - B)}{2}$$

where these symbols are as defined in 2-3.

(c) the back of the flange and the outer surface of the hub are examined by either the magnetic particle method as per Appendix 6 or the liquid penetrant method as per Appendix 8.

(e) Bolts, studs, nuts, and washers shall comply with the requirements in this Division. It is recommended that bolts and studs have a nominal diameter of not less than ½ in. (13 mm) If bolts or studs smaller than ½ in. (13 mm) are used, ferrous bolting material shall be of alloy steel. Precautions shall be taken to avoid over-stressing small-diameter bolts.

2-3 NOTATION

The symbols described below are used in the formulas for the design of flanges (see also Fig. 2-4):

A = outside diameter of flange or, where slotted holes extend to the outside of the flange, the diameter to the bottom of the slots

A_b = cross-sectional area of the bolts using the root diameter of the thread or least diameter of unthreaded position, if less

A_m = total required cross-sectional area of bolts, taken as the greater of A_{m1} and A_{m2}

A_{m1} = total cross-sectional area of bolts at root of thread or section of least diameter under stress, required for the operating conditions
= W_{m1} / S_b

A_{m2} = total cross-sectional area of bolts at root of thread or section of least diameter under stress, required for gasket seating
= W_{m2} / S_a

B = inside diameter of flange. When B is less than $20g_1$, it will be optional for the designer to substitute B_1 for B in the formula for longitudinal stress S_H.

B_1 = $B + g_1$ for loose type flanges and for integral type flanges that have calculated values h/h_o and g_1/g_o which would indicate an f value of less than 1.0, although the minimum value of f permitted is 1.0.

B_1 = $B + g_o$ for integral type flanges when f is equal to or greater than one

b = effective gasket or joint-contact-surface seating width [see Note 1, 2-5(c)(1)]

b_o = basic gasket seating width (from Table 2-5.2)

C = bolt-circle diameter

C_b = conversion factor
= 0.5 for U.S. Customary calculations; 2.5 for SI calculations

c = basic dimension used for the minimum sizing of welds equal to t_n or t_x, whichever is less

d = factor

$$d = \frac{U}{V} h_o g_o^2 \text{ for integral type flanges}$$

$$d = \frac{U}{V_L} h_o g_o^2 \text{ for loose type flanges}$$

e = factor

$$e = \frac{F}{h_o} \text{ for integral type flanges}$$

$$e = \frac{F_L}{h_o} \text{ for loose type flanges}$$

F = factor for integral type flanges (from Fig. 2-7.2)

F_L = factor for loose type flanges (from Fig. 2-7.4)

f = hub stress correction factor for integral flanges from Fig. 2-7.6 (When greater than one, this is the ratio of the stress in the small end of hub to the stress in the large end.) (For values below limit of figure, use $f = 1$.)

G = diameter at location of gasket load reaction. Except as noted in sketch (1) of Fig. 2-4, G is defined as follows (see Table 2-5.2):
When $b_o \le ¼$ in. (6 mm), G = mean diameter of gasket contact face
When $b_o > ¼$ in. (6 mm), G = outside diameter of gasket contact face less $2b$,

g_o = thickness of hub at small end

g_1 = thickness of hub at back of flange

H = total hydrostatic end force
= $0.785G^2P$

H_D = hydrostatic end force on area inside of flange
= $0.785B^2P$

H_G = gasket load (difference between flange design bolt load and total hydrostatic end force)
= $W-H$

H_p = total joint-contact surface compression load
= $2b \times 3.14\ GmP$

H_T = difference between total hydrostatic end force and the hydrostatic end force on area inside of flange
= $H-H_D$

h = hub length

h_D = radial distance from the bolt circle, to the circle on which H_D acts, as prescribed in Table 2-6

h_G = radial distance from gasket load reaction to the bolt circle
= $(C-G)/2$

h_o = factor
= $\sqrt{Bg_o}$

h_T = radial distance from the bolt circle to the circle on which H_T acts as prescribed in Table 2-6

K = ratio of outside diameter of flange to inside diameter of flange
= A/B

L = factor
= $\frac{te+1}{T}+\frac{t^3}{d}$

M_D = component of moment due to H_D,
= $H_D h_D$

M_G = component of moment due to H_G,
= $H_G h_G$

M_0 = total moment acting upon the flange, for the operating conditions or gasket seating as may apply (see 2-6)

M_T = component of moment due to H_T
= $H_T h_T$

m = gasket factor, obtain from Table 2-5.1 [see Note 1, 2-5(c)(1)]

N = width used to determine the basic gasket seating with b_o, based upon the possible contact width of the gasket (see Table 2-5.2)

P = internal design pressure (see UG-21). For flanges subject to external design pressure, see 2-11.

R = radial distance from bolt circle to point of intersection of hub and back of flange. For integral and hub flanges,
$R = \frac{C-B}{2} - g_1$

S_a = allowable bolt stress at atmospheric temperature (see UG-23)

S_b = allowable bolt stress at design temperature (see UG-23)

S_f = allowable design stress for material of flange at design temperature (operating condition) or atmospheric temperature (gasket seating), as may apply (see UG-23)

S_n = allowable design stress for material of nozzle neck, vessel or pipe wall, at design temperature (operating condition) or atmospheric temperature (gasket seating), as may apply (see UG-23)

S_H = calculated longitudinal stress in hub

S_R = calculated radial stress in flange

S_T = calculated tangential stress in flange

T = factor involving K (from Fig. 2-7.1)

t = flange thickness

t_n = nominal thickness of shell or nozzle wall to which flange or lap is attached

t_x = two times the thickness g_0, when the design is calculated as an integral flange or two times the thickness of shell nozzle wall required for internal pressure, when the design is calculated as a loose flange, but not less than $\frac{1}{4}$ in. (6 mm)

U = factor involving K (from Fig. 2-7.1)

V = factor for integral type flanges (from Fig. 2-7.3)

V_L = factor for loose type flanges (from Fig. 2-7.5)

W = flange design bolt load, for the operating conditions or gasket seating, as may apply [see 2-5(e)]

W_{m1} = minimum required bolt load for the operating conditions [see 2-5(c)]. For flange pairs used to contain a tubesheet for a floating head or a U-tube type of heat exchangers, or for any other similar design, W_{m1} shall be the larger of the values as individually calculated for each flange, and that value shall be used for both flanges.

W_{m2} = minimum required bolt load for gasket seating [see 2-5(c)]. For flange pairs used to contain a tubesheet for a floating head or U-tube type of heat exchanger, or for any other similar design where the flanges or gaskets are not the same, W_{m2} shall be the larger of the values calculated for each flange and that value shall be used for both flanges.

w = width used to determine the basic gasket seating width b_0, based upon the contact width between the flange facing and the gasket (see Table 2-5.2)

Y = factor involving K (from Fig. 2-7.1)

y = gasket or joint-contact-surface unit seating load, [see Note 1, 2-5(c)]

Z = factor involving K (from Fig. 2-7.1)

2-4 CIRCULAR FLANGE TYPES A05

(a) For purposes of computation, there are three types:

(1) Loose Type Flanges. This type covers those designs in which the flange has no direct connection to the nozzle neck, vessel, or pipe wall, and designs where

the method of attachment is not considered to give the mechanical strength equivalent of integral attachment. See Fig. 2-4 sketches (1), (1a), (2), (2a), (3), (3a), (4), and (4a) for typical loose type flanges and the location of the loads and moments. Welds and other details of construction shall satisfy the dimensional requirements

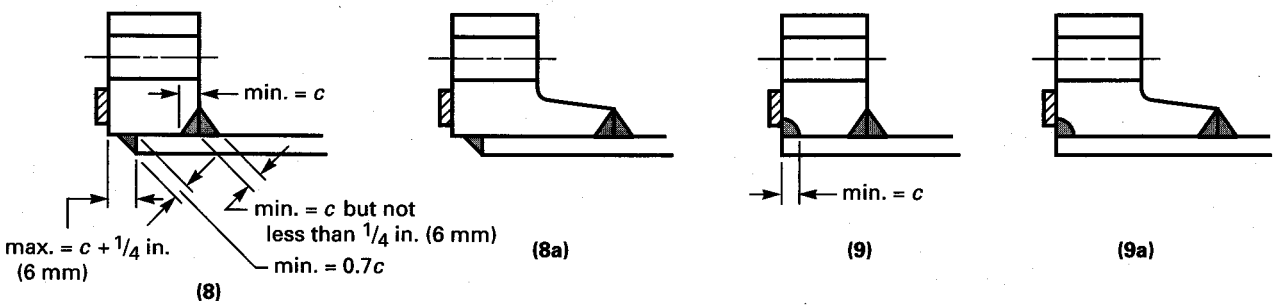

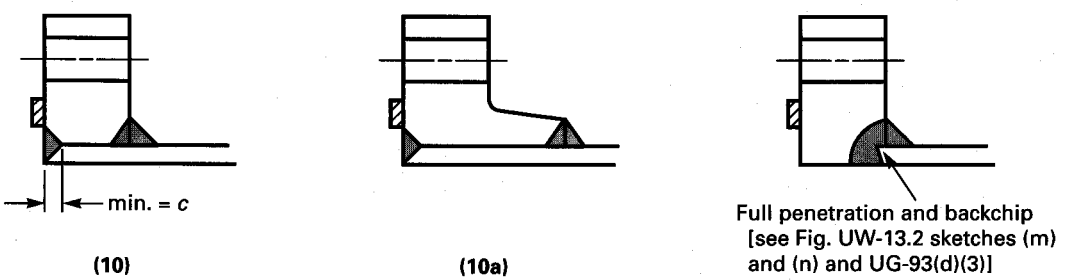

GENERAL NOTES: (Optional Type Flanges):
(a) Optional type flanges may be calculated as either loose or integral type. See 2-4.
(b) Loadings and dimensions not shown in sketches (8), (8a), (9), (9a), (10), and (10a) are the same as shown in sketch (2) when the flange is calculated as a loose type flange and as shown in sketch (7) when the flange is calculated as an integral type flange.
(c) The groove and fillet welds between the flange back face and the shell given in sketch (8) also apply to sketches (8a), (9), (9a), (10), and (10a).

Optional Type Flanges

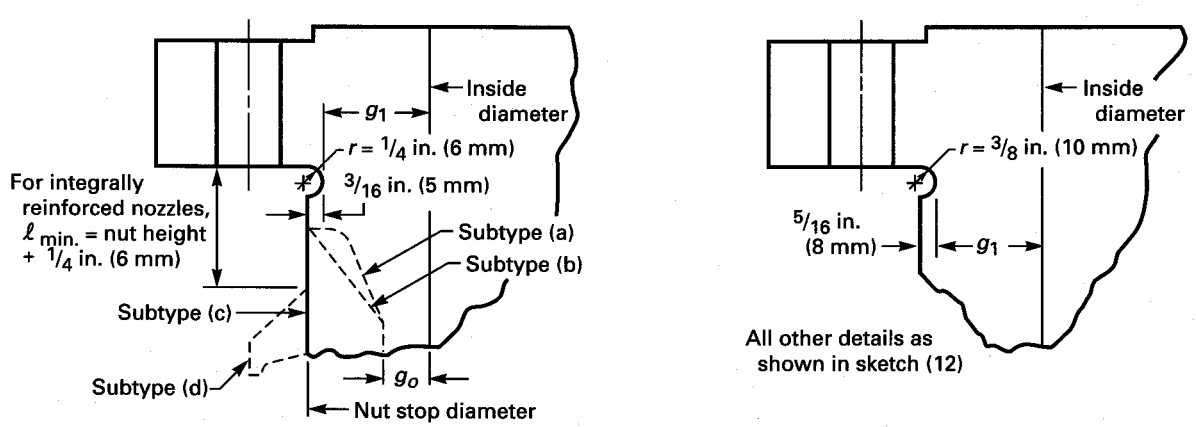

(12) For Flanged Nozzles 18 in. (460 mm) and Smaller Nominal Size

(12a) For Flanged Nozzles Over 18 in. (460 mm) Nominal Size

GENERAL NOTES: (Flanges With Nut Stops):
For subtypes (a) and (b), g_o is the thickness of the hub at the small end. For subtypes (c) and (d), $g_o = g_1$.

Flanges With Nut Stops

FIG. 2-4 TYPES OF FLANGES (CONT'D)

given in Fig. 2-4 sketches (1), (1a), (2), (2a), (3), (3a), (4), and (4a).

(2) Integral Type Flanges. This type covers designs where the flange is cast or forged integrally with the nozzle neck, vessel or pipe wall, butt welded thereto, or attached by other forms of arc or gas welding of such a nature that the flange and nozzle neck, vessel or pipe wall is considered to be the equivalent of an integral structure. In welded construction, the nozzle neck, vessel, or pipe wall is considered to act as a hub. See Fig. 2-4 sketches (5), (6), (6a), (6b), and (7) for typical integral type flanges and the location of the loads and moments. Welds and other details of construction shall satisfy the dimensional requirements given in Fig. 2-4 sketches (5), (6), (6a), (6b), and (7).

(3) Optional Type Flanges. This type covers designs where the attachment of the flange to the nozzle neck, vessel or pipe wall is such that the assembly is considered to act as a unit, which shall be calculated as an integral flange, except that for simplicity the designer may calculate the construction as a loose type flange provided none of the following values is exceeded:

$$g_0 = \frac{5}{8} \text{ in. (16 mm)}$$

$$B/g_0 = 300$$

$$P = 300 \text{ psi (2 MPa)}$$

$$\text{operating temperature} = 700°\text{F (370°C)}$$

See Fig. 2-4 sketches (8), (8a), (9), (9a), (10), (10a), and (11) for typical optional type flanges. Welds and other details of construction shall satisfy the dimensional requirements given in Fig. 2-4 sketches (8), (8a), (9), (9a), (10), (10a), and (11).

2-5 BOLT LOADS

(a) General Requirements

(1) In the design of a bolted flange connection, calculations shall be made for each of the two design conditions of operating and gasket seating, and the more severe shall control.

(2) In the design of flange pairs used to contain a tubesheet of a heat exchanger or any similar design where the flanges and/or gaskets may not be the same, loads must be determined for the most severe condition of operating and/or gasket seating loads applied to each side at the same time. This most severe condition may be gasket seating on one flange with operating on the other, gasket seating on each flange at the same time, or operating on each flange at the same time. Although no specific rules are given for the design of the flange pairs, after the loads for the most severe conditions are determined, calculations shall be made for each flange following the rules of Appendix 2.

Table 2-4
RECOMMENDED MINIMUM GASKET CONTACT WIDTHS FOR SHEET AND COMPOSITE GASKETS

Flange ID	Gasket Contact Width
24 in. (600 mm) < ID ≤ 36 in. (900 mm)	1 in. (25 mm)
36 in. (900 mm) < ID < 60 in. (1500 mm)	1¼ in. (32 mm)
ID ≥ 60 in. (1500 mm)	1½ (38 mm)

A05

(3) Recommended minimum gasket contact widths for sheet and composite gaskets are provided in Table 2-4. A05

(b) Design Conditions

(1) Operating Conditions. The conditions required to resist the hydrostatic end force of the design pressure tending to part the joint, and to maintain on the gasket or joint-contact surface sufficient compression to assure a tight joint, all at the design temperature. The minimum load is a function of the design pressure, the gasket material, and the effective gasket or contact area to be kept tight under pressure, per Formula (1) in (c)(1) below, and determines one of the two requirements for the amount of the bolting A_{m1}. This load is also used for the design of the flange, per Formula (3) in (d) below.

(2) Gasket Seating. The conditions existing when the gasket or joint-contact surface is seated by applying an initial load with the bolts when assembling the joint, at atmospheric temperature and pressure. The minimum initial load considered to be adequate for proper seating is a function of the gasket material, and the effective gasket or contact area to be seated, per Formula (2) in (c)(2) below, and determines the other of the two requirements for the amount of bolting A_{m2}. For the design of the flange, this load is modified per Formula (4) in (d) below to take account of the operating conditions, when these govern the amount of bolting required A_m, as well as the amount of bolting actually provided A_b.

(c) Required Bolt Loads. The flange bolt loads used in calculating the required cross-sectional area of bolts shall be determined as follows.

(1) The required bolt load for the operating conditions W_{m1} shall be sufficient to resist the hydrostatic end force H exerted by the maximum allowable working pressure on the area bounded by the diameter of gasket reaction, and, in addition, to maintain on the gasket or joint-contact surface a compression load H_p, which experience has shown to be sufficient to assure a tight joint. (This compression load is expressed as a multiple m of the

internal pressure. Its value is a function of the gasket material and construction. See Note 1.)

NOTE 1: Tables 2-5.1 and 2-5.2 give a list of many commonly used gasket materials and contact facings, with suggested values of m, b, and y that have proved satisfactory in actual service. These values are suggested only and are not mandatory. Values that are too low may result in leakage at the joint without affecting the safety of the design. The primary proof that the values are adequate is the hydrostatic test.

The required bolt load for the operating conditions W_{m1} is determined in accordance with Formula (1).

$$W_{m1} = H + H_p = 0.785G^2P + (2b \times 3.14GmP) \quad (1)$$

TABLE 2-5.2
EFFECTIVE GASKET WIDTH[2]

Facing Sketch (Exaggerated)	Basic Gasket Seating Width b_o	
	Column I	Column II
(1a) 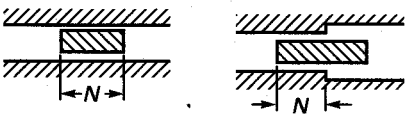	$\frac{N}{2}$	$\frac{N}{2}$
(1b) 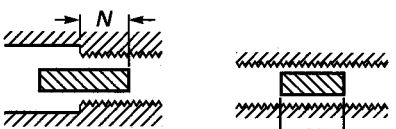 See Note (1)		
(1c) 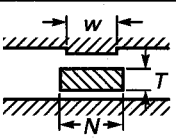 $w \le N$	$\frac{w+T}{2}; \left(\frac{w+N}{4}\text{ max}\right)$	$\frac{w+T}{2}; \left(\frac{w+N}{4}\text{ max}\right)$
(1d) 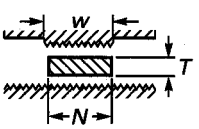 See Note (1) $w \le N$		
(2) $^1/_{64}$ in. (0.4 mm) nubbin 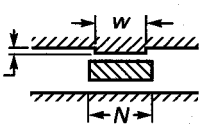 $w \le N/2$	$\frac{w+N}{4}$	$\frac{w+3N}{8}$
(3) $^1/_{64}$ in. (0.4 mm) nubbin 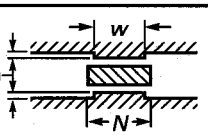 $w \le N/2$	$\frac{N}{4}$	$\frac{3N}{8}$
(4) 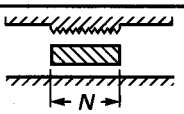 See Note (1)	$\frac{3N}{8}$	$\frac{7N}{16}$
(5) 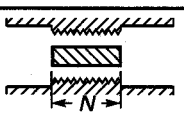 See Note (1)	$\frac{N}{4}$	$\frac{3N}{8}$
(6) 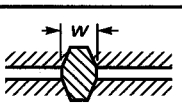	$\frac{w}{8}$	...

TABLE 2-5.2
EFFECTIVE GASKET WIDTH[2] (CONT'D)

Effective Gasket Seating Width, b $b = b_o$, when $b_o \le 1/4$ in. (6 mm); $b = C_b\sqrt{b_o}$, when $b_o > 1/4$ in. (6 mm)	Location of Gasket Load Reaction
	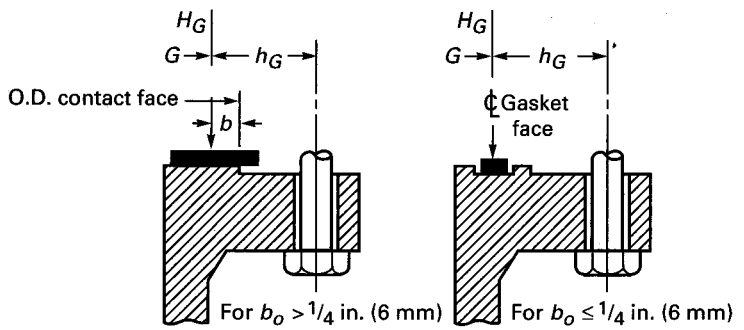

NOTES:
(1) Where serrations do not exceed $1/64$ in. (0.4 mm) depth and $1/32$ in. (0.8 mm) width spacing, sketches (1b) and (1d) shall be used.
(2) The gasket factors listed only apply to flanged joints in which the gasket is contained entirely within the inner edges of the bolt holes.

A05 *(2)* Before a tight joint can be obtained, it is necessary to seat the gasket or joint-contact surface properly by applying a minimum initial load (under atmospheric temperature conditions without the presence of internal pressure), which is a function of the gasket material and the effective gasket area to be seated. The minimum initial bolt load required for this purpose W_{m2} shall be determined in accordance with Formula (2).

$$W_{m2} = 3.14bGy \qquad (2)$$

The need for providing sufficient bolt load to seat the gasket or joint-contact surfaces in accordance with Formula (2) will prevail on many low-pressure designs and with facings and materials that require a high seating load, and where the bolt load computed by Formula (1) for the operating conditions is insufficient to seat the joint. Accordingly, it is necessary to furnish bolting and to pretighten the bolts to provide a bolt load sufficient to satisfy both of these requirements, each one being individually investigated. When Formula (2) governs, flange proportions will be a function of the bolting instead of internal pressure.

(3) Bolt loads for flanges using gaskets of the self-energizing type differ from those shown above.

(a) The required bolt load for the operating conditions W_{m1} shall be sufficient to resist the hydrostatic end force H exerted by the maximum allowable working pressure on the area bounded by the outside diameter of the gasket. H_p is to be considered as 0 for all self-energizing gaskets except certain seal configurations which generate axial loads which must be considered.

(b) $W_{m2} = 0$.

Self-energizing gaskets may be considered to require an inconsequential amount of bolting force to produce a seal. Bolting, however, must be pretightened to provide a bolt load sufficient to withstand the hydrostatic end force H.

(d) Total Required and Actual Bolt Areas, A_m and A_b. The total cross-sectional area of bolts A_m required for both the operating conditions and gasket seating is the greater of the values for A_{m1} and A_{m2} where $A_{m1} = W_{m1}/S_b$ and $A_{m2} = W_{m2}/S_a$. A selection of bolts to be used shall be made such that the actual total cross-sectional area of bolts A_b will not be less than A_m.

(e) Flange Design Bolt Load W. The bolt loads used in the design of the flange shall be the values obtained from Formulas (3) and (4). For operating conditions,

$$W = W_{m1} \qquad (3)$$

For gasket seating,

$$W = \frac{(A_m + A_b)S_a}{2} \qquad (4)$$

S_a used in Formula (4) shall be not less than that tabulated in the stress tables (see UG-23). In addition to the minimum requirements for safety, Formula (4) provides a margin against abuse of the flange from overbolting. Since the margin against such abuse is needed primarily for the initial, bolting-up operation which is done at atmospheric temperature and before application of internal pressure, the flange design is required to satisfy this loading only under such conditions (see Note 2).

NOTE 2: Where additional safety against abuse is desired, or where it is necessary that the flange be suitable to withstand the full available bolt load $A_b S_a$, the flange may be designed on the basis of this latter quantity.

A05 2-6 FLANGE MOMENTS

In the calculation of flange stress, the moment of a load acting on the flange is the product of the load and its moment arm. The moment arm is determined by the relative position of the bolt circle with respect to that of the load producing the moment (see Fig. 2-4). No consideration shall be given to any possible reduction in moment arm due to cupping of the flanges or due to inward shifting of the line of action of the bolts as a result thereof. It is recommended that the valve of h_G [$(C - G)/2$] be kept to a minimum to reduce flange rotation at the sealing surface.

For the operating conditions, the total flange moment M_o is the sum of the three individual moments M_D, M_T, and M_G, as defined in 2-3 and based on the flange design load of Formula (3) with moment arms as given in Table 2-6.

For gasket seating, the total flange moment M_o is based on the flange design bolt load of Formula (4), which is opposed only by the gasket load, in which case

$$M_o = W\frac{(C - G)}{2} \qquad (5)$$

2-7 CALCULATION OF FLANGE STRESSES

The stresses in the flange shall be determined for both the operating conditions and gasket seating condition, whichever controls, in accordance with the following formulas:

(a) for integral type flanges [Fig. 2-4 sketches (5), (6), (6a), (6b), and (7)]; for optional type flanges calculated as integral type [Fig. 2-4 sketches (8), (8a), (9), (9a), (10), (10a), and (11)]; and for loose type flanges with a hub which is considered [Fig. 2-4 sketches (1), (1a), (2), (2a), (3), (3a), (4), and (4a)]:

Longitudinal hub stress

$$S_H = \frac{fM_o}{Lg_1{}^2B} \qquad (6)$$

Radial flange stress

$$S_R = \frac{(1.33te + 1)M_o}{Lt^2B} \qquad (7)$$

TABLE 2-6
MOMENT ARMS FOR FLANGE LOADS UNDER OPERATING CONDITIONS

	h_D	h_T	h_G
Integral type flanges [see Fig. 2–4 sketches (5), (6), (6a), (6b), and (7)]; and optional type flanges calculated as integral type [see Fig. 2-4 sketches (8), (8a), (9), (9a), (10), (10a), and (11)]	$R + 0.5g_1$	$\frac{R + g_1 + h_G}{2}$	$\frac{C - G}{2}$
Loose type, except lap-joint flanges [see Fig. 2-4 sketches (2), (2a), (3), (3a), (4), and (4a)]; and optional type flanges calculated as loose type [see Fig. 2-4 sketches (8), (8a), (9), (9a), (10), (10a), and (11)]	$\frac{C - B}{2}$	$\frac{h_D + h_G}{2}$	$\frac{C - G}{2}$
Lap-type flanges [see Fig. 2-4 sketches (1) and (1a)]	$\frac{C - B}{2}$	$\frac{C - G}{2}$	$\frac{C - G}{2}$

Tangential flange stress

$$S_T = \frac{YM_o}{t^2B} - ZS_R \qquad (8)$$

(b) for loose type flanges without hubs and loose type flanges with hubs which the designer chooses to calculate without considering the hub [Fig. 2-4 sketches (1), (1a), (2), (2a), (3), (3a), (4), and (4a)] and optional type flanges calculated as loose type [Fig. 2-4 sketches (8), (8a), (9), (9a), (10), (10a), and (11)]:

$$S_T = \frac{YM_o}{t^2B} \qquad (9)$$

$$S_R = 0 \qquad S_H = 0$$

2-8 ALLOWABLE FLANGE DESIGN STRESSES

(a) The flange stresses calculated by the formulas in 2-7 shall not exceed the following values:

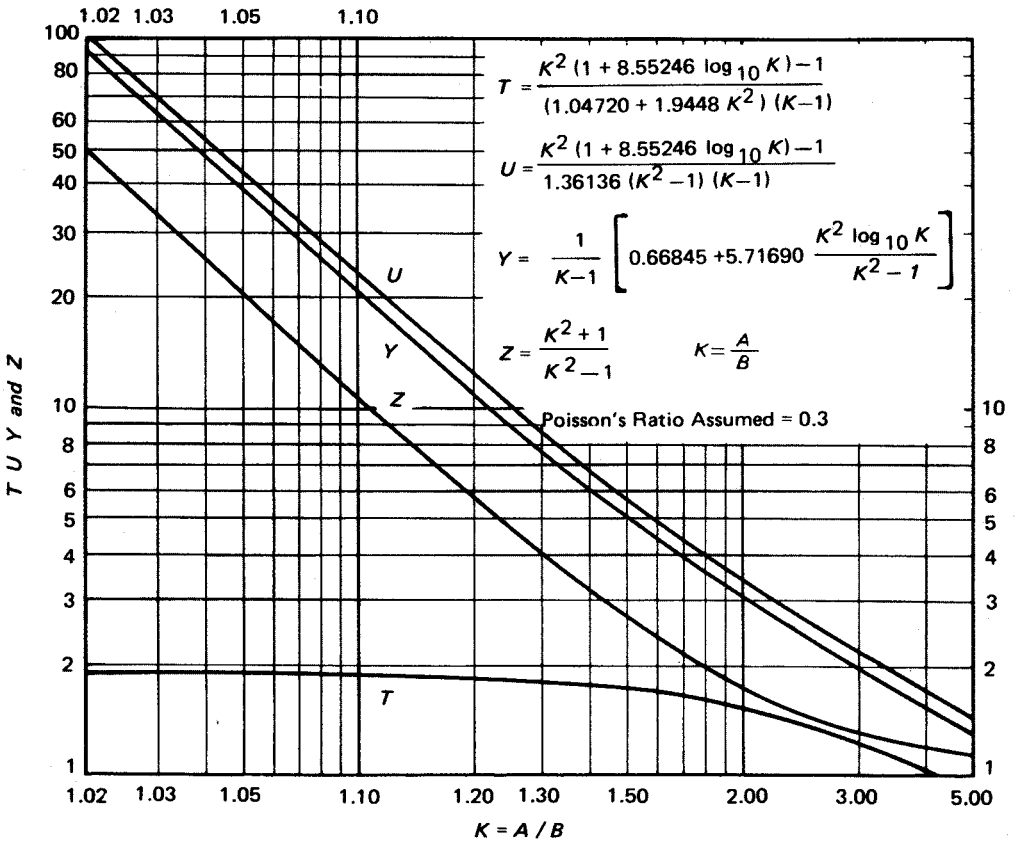

FIG. 2-7.1 VALUES OF *T, U, Y,* AND *Z*
(Terms Involving K)

(1) longitudinal hub stress S_H not greater than S_f for cast iron[1] and, except as otherwise limited by (1)(a) and (1)(b) below, not greater than 1.5 S_f for materials other than cast iron:

(a) longitudinal hub stress S_H not greater than the smaller of $1.5S_f$ or $1.5S_n$ for optional type flanges designed as integral [Fig. 2-4 sketches (8), (8a), (9), (9a), (10), (10a), and (11)], also integral type [Fig. 2-4 sketch (7)] where the neck material constitutes the hub of the flange;

(b) longitudinal hub stress S_H not greater than the smaller of $1.5S_f$ or $2.5S_n$ for integral type flanges with hub welded to the neck, pipe or vessel wall [Fig. 2-4 sketches (6), (6a), and (6b)].

(2) radial flange stress S_R not greater than S_f;

(3) tangential flange stress S_T not greater than S_f;

(4) also $(S_H + S_R)/2$ not greater than S_f and $(S_H + S_T)/2$ not greater than S_f.

(b) For hub flanges attached as shown in Fig. 2-4 sketches (2), (2a), (3), (3a), (4), and (4a), the nozzle neck, vessel or pipe wall shall not be considered to have any value as a hub.

(c) In the case of loose type flanges with laps, as shown in Fig. 2-4 sketches (1) and (1a), where the gasket is so located that the lap is subjected to shear, the shearing stress shall not exceed 0.8 S_n for the material of the lap, as defined in 2-3. In the case of welded flanges, shown in Fig. 2-4 sketches (3), (3a), (4), (4a), (7), (8), (8a), (9), (9a), (10), and (10a) where the nozzle neck, vessel, or pipe wall extends near to the flange face and may form the gasket contact face, the shearing stress carried by the welds shall not exceed 0.8 S_n. The shearing stress shall be calculated on the basis of W_{m1} or W_{m2} as defined in 2-3, whichever is greater. Similar cases where flange parts are subjected to shearing stress shall be governed by the same requirements.

[1] When the flange material is cast iron, particular care should be taken when tightening the bolts to avoid excessive stress that may break the flange. The longitudinal hub stress has been limited to S_f in order to minimize any cracking of flanges. An attempt should be made to apply no greater torque than is needed to assure tightness during the hydrostatic test.

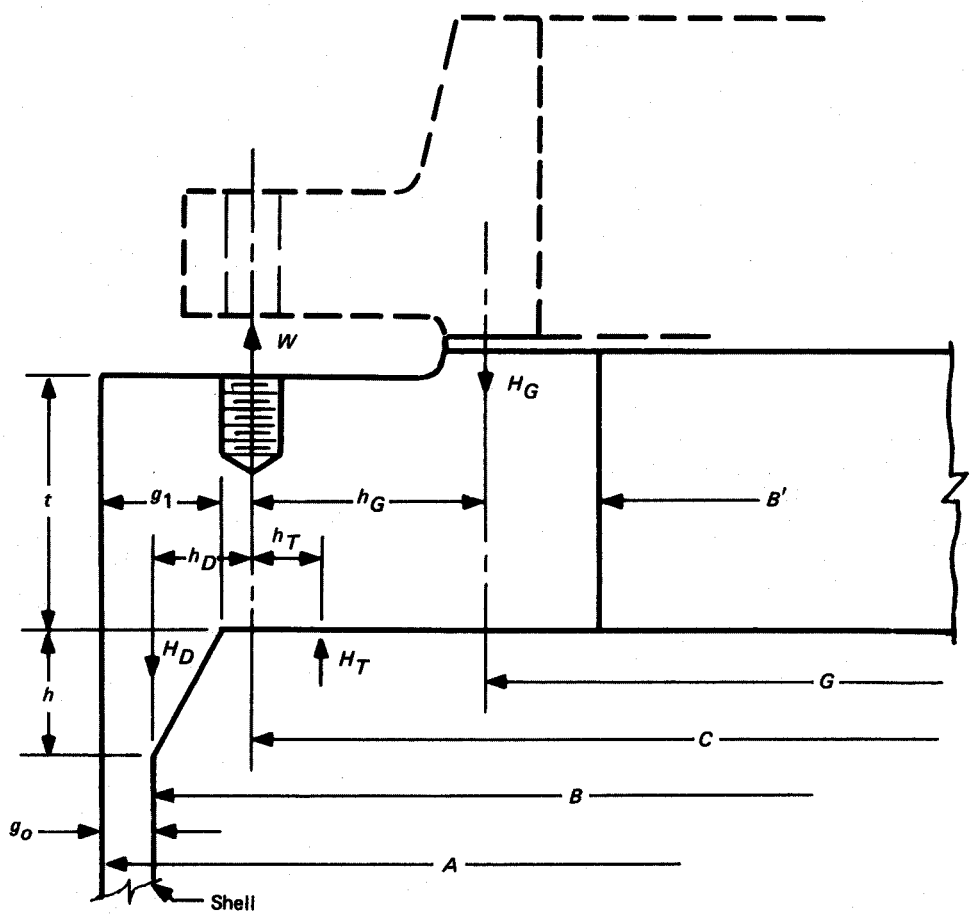

FIG. 2-13.1 REVERSE FLANGE

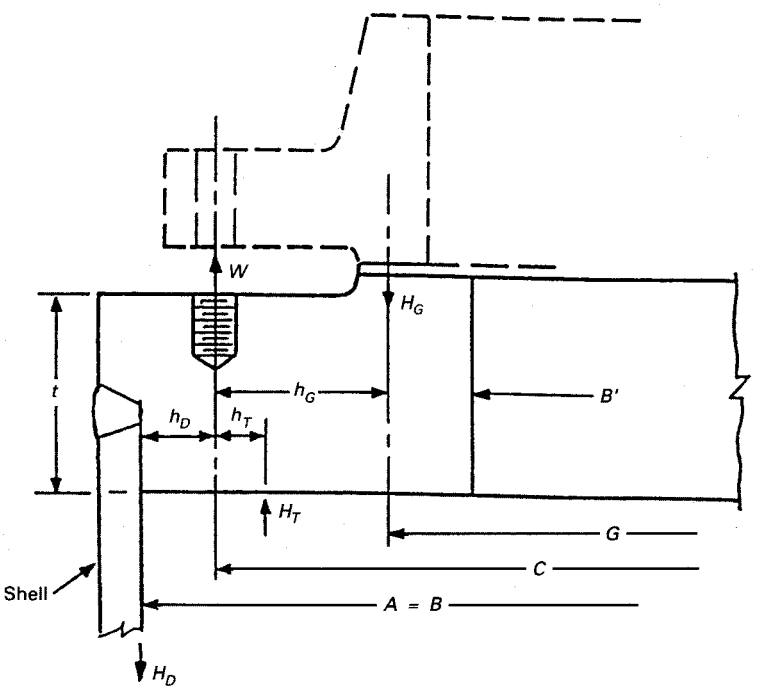

FIG. 2-13.2 LOOSE RING TYPE REVERSE FLANGE

(2) Stress at Inside Diameter B'

$$S_{T2} = (M_o/t^2B')\left[Y - \frac{2K^2(1 + \frac{2}{3}te_r)}{(K^2 - 1)L_r}\right]$$

(d) For Loose Ring Type Reverse Flanges

$$S_T = YM_o/t^2B'$$

$$S_R = 0 \qquad S_H = 0$$

A05 **2-14 FLANGE RIGIDITY**

(a) Flanges that have been designed based on allowable stress limits alone may not be sufficiently rigid to control leakage. This paragraph provides a method of checking flange rigidity. The rigidity factors provided in Table 2-14 have been proven through extensive user experience for a wide variety of joint design and service conditions. The use of the rigidity index does not guarantee a leakage rate within established limits. The use of the factors must be considered as only part of the system of joint design and assembly requirements to ensure leak tightness.

(b) The notation is as follows:

E = modulus of elasticity for the flange material at design temperature (operating condition) or at atmospheric temperature (gasket seating condition), psi

TABLE 2-14 FLANGE RIGIDITY FACTORS

Flange Type	Rigidity Criterion
Integral type flange	$J = \frac{52.14\,VM_o}{LEg_o^2K_Ih_o} \le 1.0$
Loose type flanges with hubs	$J = \frac{52.14\,V_LM_o}{LEg_o^2K_Lh_o} \le 1.0$
Loose type flanges without hubs and optional flanges	$J = \frac{109.4\,M_o}{Et^3K_L(\text{in } K)} \le 1.0$

J = rigidity index = 1
K_I = rigidity factor for integral flanges = 0.3
k_L = rigidity factor for loose-type flanges = 0.2
All other notation in this paragraph is defined in 2-3.

(c) If the value of J, when calculated by the appropriate formula above, is greater than 1.0, the thickness of the flange, t, shall be increased and J recalculated until $J = 1$.

2-15 QUALIFICATION OF ASSEMBLY PROCEDURES AND ASSEMBLERS A05

It is recommended that flange joints designed to this Appendix be assembled by qualified procedures and by qualified assemblers. ASME PCC-1 may be used as a guide.

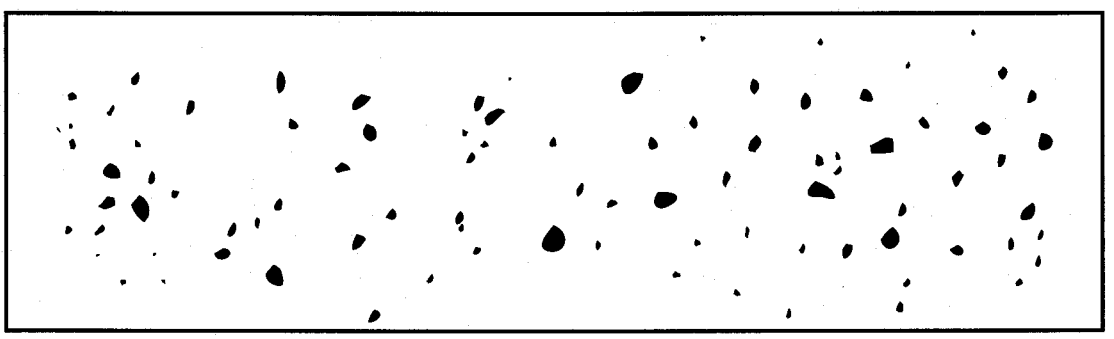

(a) Random Rounded Indications [See Note (1)]

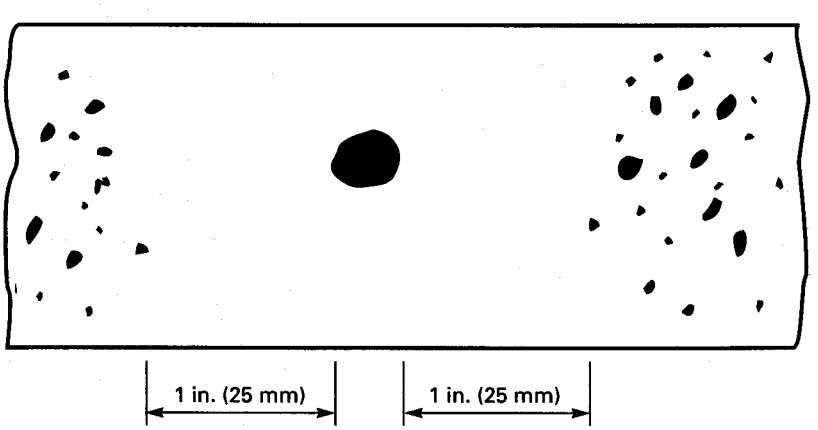

(b) Isolated Indication [See Note (2)]

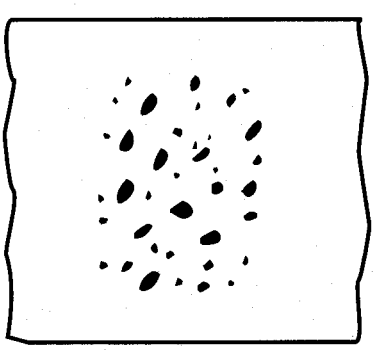

(c) Cluster

NOTES:
(1) Typical concentration and size permitted in any 6 in. (150 mm) length of weld.
(2) Maximum size per Table 4-1.

FIG. 4-8 CHARTS FOR t OVER 4 in. (100 mm)

MANDATORY APPENDIX 5
FLANGED AND FLUED OR FLANGED ONLY EXPANSION JOINTS

04 **5-1 GENERAL**

5-1(a) Flanged and flued or flanged only expansion joints used as an integral part of heat exchangers or other pressure vessels shall be designed to provide flexibility for thermal expansions and also function as pressure containing elements. The rules in this Appendix are intended to apply to typical single layer flanged and flued or flanged only elements shown in Fig. 5-1. They are limited to applications involving only axial deflections.

The suitability of the expansion joint for the specified design, pressure, and temperature shall be determined by methods described in this Appendix.

5-1(b) In all vessels with expansion joints, the hydrostatic end force caused by pressure and/or the joint spring force shall be contained by adequate restraining elements (i.e., tube bundle, tubesheets or shell, external bolting, anchors, etc.). The average primary membrane stress [see UG-23(c)] in these restraining elements shall not exceed the maximum allowable stress at the design temperature for the material given in the tables given in Subpart 1 of Section II, Part D.

5-1(c) Joint flexible elements shall not be extended, compressed, rotated, or laterally offset to accommodate connecting parts which are not properly aligned, unless such movements have been accounted for in the design under the provisions of U-2(g).

A05 *5-1(d)* The rules of this Appendix do not address cyclic loading conditions. As such, this Appendix does not require a cyclic life determination. The User is cautioned that the design of some expansion joints (especially flanged-only joints) may be governed by cyclic loading. If cyclic loading [see UG-22(e)] is specified for a vessel containing the expansion joint, see U-2(g).

5-1(e) This Division does not contain rules to cover all details of design and construction of expansion joints. The criteria in this Appendix are therefore established to cover most common forms of flanged and flued or flanged only expansion joints, but it is not intended to limit configuration or details to those illustrated or otherwise described herein. For designs which differ from the basic concepts of this Appendix (e.g., multilayer, asymmetric geometries or loadings, etc.), the design requirements of U-2(g) apply.

5-2 MATERIALS

Materials for pressure retaining components shall conform to the requirements of UG-4. For carbon and low alloy steels, minimum thickness exclusive of corrosion allowance shall be 0.125 in. (3 mm) for all pressure containing parts. The minimum thickness for high alloy steel shall conform to requirements of UG-16.

5-3 DESIGN 04

The design of expansion joints shall conform to the requirements of Part UG and those of (a) through (f) below.

5-3(a) The design of expansion joint flexible elements shall satisfy, in both the corroded and noncorroded condition, the following combinations of maximum stress components and corresponding stress limits [see (b) below].

5-3(a)(1) Pressure Loadings Only. The maximum stress at any location within the joint shall be limited to 1.5S [where S is the maximum allowable stress value (see UG-23) for the joint material], except as provided below. The references to maximum stress do not include any effect of stress concentrations.

(a) For tubular heat exchangers, considering tube side pressure, the stresses may be evaluated only in accordance with provisions of (a)(2) below if the restraining elements are not dependent on the stiffness of the expansion joint in order to satisfy the stress requirements of 5-1(b).

(b) For tubular heat exchangers, considering shell side pressure, when the restraining elements are not dependent on the stiffness of the expansion joint in order to satisfy the stress requirements of 5-1(b):

(4) In the event that $(L_2 + R/2) > p$, then compute a possible new pressure rating per 13-9(d)(4).

(d) An example illustrating use of these rules is given in 13-17(h).

13-13 VESSELS OF CIRCULAR CROSS SECTION HAVING A SINGLE DIAMETRAL STAYING MEMBER [FIG. 13-2(c)]

For the equations in these paragraphs, the moments of inertia are calculated on a per-unit-width basis. That is, $I = bt^3/12$, where $b = 1.0$. See para. 13-4(k).

(a) The cylindrical shell and diametral stay plate are sized such that the various vessel members will not be overstressed when there is full pressure in both vessel compartments or when there is full pressure in one compartment and zero pressure in the other compartment. End closure plates or heads are subject to the rules of 13-4(f) and shall be designed for the maximum pressure condition in the compartments. Stresses need to be computed only at the shell-plate junction since this is the location of maximum stress.

(b) For the case of equal pressure in both compartments, stresses are as follows:

(1) Membrane Stress

Shell Section

$$S_m = P_1 R/t_1 \tag{1}$$

Diametral Plate

$$S_m = \frac{2\pi P_1 t_1^2}{3Rt_3(\pi^2 - 8)} \tag{2}$$

(2) Bending Stress

Shell Section

$$S_b = \frac{c}{I_1}\left[\frac{2P_1 t_1^2}{3(\pi^2 - 8)}\right] \tag{3}$$

(3) Total Stress

Shell Section

$$S_T = \text{Eq. (1)} + \text{Eq. (3)} \tag{4}$$

Diametral Plate

$$S_T = \text{Eq. (2)} \tag{5}$$

(4) An example illustrating use of these rules is given in 13-17(i).

(c) For the case of unequal pressures in the compartments, stresses are as follows, where P is the maximum value P_1 or P_2.

TABLE 13-13(c)

Ratio of Long to Short Side of Plate Element	Plate Parameter J_1
1.0	0.0513
1.1	0.0581
1.2	0.0639
1.3	0.0694
1.4	0.0755
1.5	0.0812
1.6	0.0862
1.7	0.0908
1.8	0.0948
1.9	0.0985
2.0	0.1017
3.0	0.1189
4.0	0.1235
≥ 5.0	0.1246

(1) Membrane Stress

Shell Section

$$S_m = PR/t_1 \tag{6}$$

Diametral Plate

$$S_m = \frac{\pi t_1^2 (P_1 + P_2)}{3Rt_3(\pi^2 - 8)} \tag{7}$$

(2) Bending Stress A05

Shell Section

$$S_b = \frac{c}{3I_1}\left[P_1\left(\frac{2t_1^2}{\pi^2 - 8}\right) + (P_1 - P_2)\frac{3R^2}{6 + (t_3/t_1)^3}\right] \tag{8}$$

Diametral Plate

For $L_v \le 2R$,

$$S_b = \frac{J_1 c}{I_3}[(P_1 - P_2)L_v^2] \tag{9}$$

For $L_v > 2R$,

$$S_b = \frac{J_1 c}{I_3}[(P_1 - P_2)(4R^2)] \tag{10}$$

where J_1 is given in Table13-13(c).

(3) Total Stress

Shell Section

$$S_T = \text{Eq. (6)} + \text{Eq. (8)} \tag{11}$$

Diametral Plate

$$S_T = \text{Eq. (7)} + \text{Eq. (9) or (10)} \qquad (12)$$

(4) An example illustrating use of these rules is given in 13-17(i).

13-14 VESSELS OF NONCIRCULAR CROSS SECTION SUBJECT TO EXTERNAL PRESSURE

Rectangular cross section vessels per Fig. 13-2(a) sketches (1) and (2) subject to external pressure shall meet the following requirements.

13-14(a) The stresses shall be calculated in accordance with 13-7(a) and (b) except that P_e shall be substituted for P. These stresses shall meet the allowable stress criteria as for the case of internal pressure in accordance with 13-4.

A05 *13-14(b)* The four side plates and the two end plates shall be checked for stability in accordance with Eq. (1). In the following equations, the plate thickness t and the modulus of elasticity E_2 must be adjusted if the plate is perforated. In equations for S_{mA} and S_{mB}, multiply t by e_m; in equations for S_{crA} and S_{crB}, no adjustment of t shall be made.

A = subscript to identify stress or load acting in direction parallel to long dimension of panel being considered

B = subscript to identify stress or load acting in direction parallel to short dimension of panel being considered

S_{mA} = compression stress applied to short edge of side panels due to external pressure on the end plates [see Fig. 13-14(b)]

S_{mB} = compression stress applied to long edge of side panels and end panels due to external pressure on the adjacent side plates [see Fig. 13-14(b)]

K_A; K_B = plate buckling coefficients, obtained from Fig. 13-14(a), as used in equations for calculating S_{crA} and S_{crB}, respectively

S_{crA}; S_{crB} = plate buckling stress when panel is subjected to stresses on two opposite edges in directions indicated by subscripts A and B [see Fig. 13-14(b)]

$$\frac{2S_{mA}}{S_{crA}} + \frac{2S_{mB}}{S_{crB}} \le 1.0 \qquad (1)$$

where

$S_{crA} = S'_{crA}$ when $S'_{crA} \le S_y/2$
$= S''_{crA}$ when $S'_{crA} > S_y/2$
$S_{crB} = S'_{crB}$ when $S'_{crB} \le S_y/2$
$= S''_{crB}$ when $S'_{crB} > S_y/2$

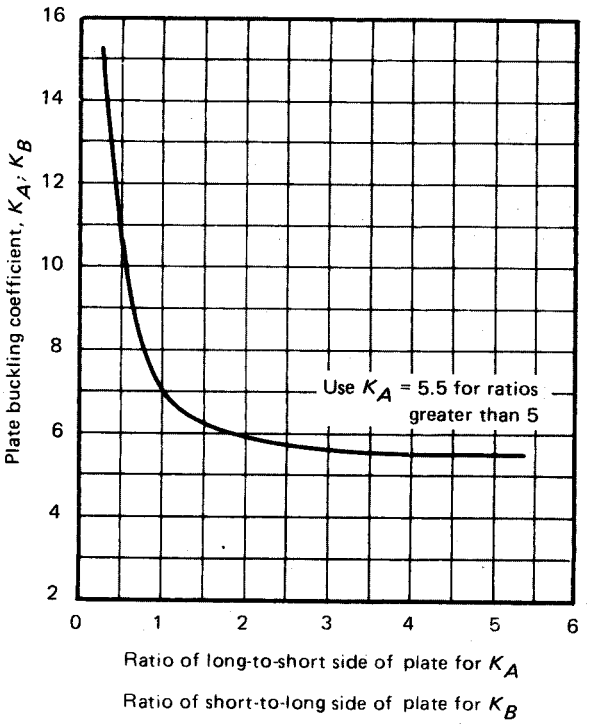

GENERAL NOTE: When ratio is less than 0.258, use $K_B = 1.0$ and L_v = (short side dimension, H or h) in equations for calculating S'_{crB}.

FIG. 13-14(a)

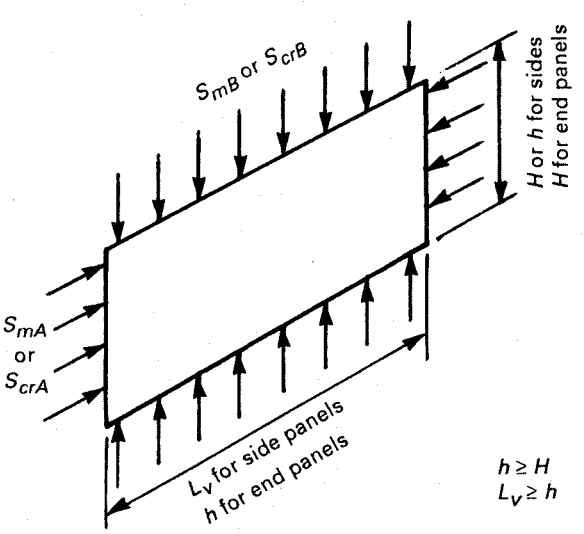

FIG. 13-14(b) ORIENTATION OF PANEL DIMENSIONS AND STRESSES

Short-Side Plates

$$S_{mA} = \frac{P_e h H}{2(t_1 H + t_2 h)} \quad (2)^5$$

$$S_{mB} = P_e h / 2t_1 \quad (3)$$

$$S'_{crA} = \frac{\pi^2 E_2}{12(1-\nu^2)} \left(\frac{t_1}{H}\right)^2 K_A \quad (4A)$$

$$S''_{crA} = S_y - S_y^2 / 4S'_{crA} \quad (4B)$$

$$S'_{crB} = \frac{\pi^2 E_2}{12(1-\nu^2)} \left(\frac{t_1}{L_v}\right)^2 K_B \quad (5A)$$

$$S''_{crB} = S_y - \frac{S_y^2}{4S_{crB}} \quad (5B)$$

Long-Side Plates

$$S_{mA} = \frac{P_e h H}{2(t_1 H + t_2 h)} \quad (6)^5$$

$$S_{mB} = \frac{P_e H}{2t_2} \quad (7)^6$$

$$S'_{crA} = \frac{\pi^2 E_2}{12(1-\nu^2)} \left(\frac{t_2}{h}\right)^2 K_A \quad (8A)$$

$$S''_{crA} = S_y - \frac{S_y^2}{4S'_{crA}} \quad (8B)$$

$$S'_{crB} = \frac{\pi^2 E_2}{12(1-\nu^2)} \left(\frac{t_2}{L_v}\right)^2 K_B \quad (9A)$$

$$S''_{crB} = S_y - \frac{S_y^2}{4S'_{crB}} \quad (9B)$$

End Plates

$$S_{mA} = \frac{P_e H L_v}{2(t_2 L_v + t_5 H)} \quad (10)^5$$

$$S_{mB} = \frac{P_e h L_v}{2(t_1 L_v + t_5 h)} \quad (11)$$

$$S'_{crA} = \frac{\pi^2 E_2}{12(1-\nu^2)} \left(\frac{t_5}{H}\right)^2 K_A \quad (12A)$$

$$S''_{crA} = S_y - \frac{S_y^2}{4S'_{crA}} \quad (12B)$$

$$S'_{crB} = \frac{\pi^2 E_2}{12(1-\nu^2)} \left(\frac{t_5}{h}\right)^2 K_B \quad (13A)$$

[5] These equations apply to vessels in which the long-side plates are of equal thickness. If thicknesses are not equal, replace $2t_2$ with $(t_2 + t_{22})$.

[6] These equations apply to vessels in which the long-side plates are of equal thickness. If thicknesses are unequal, then use Eqs. (12A) and (12B) of 13-7(b)(1).

$$S''_{crB} = S_y - \frac{S_y^2}{4S'_{crB}} \quad (13B)$$

13-14(c) In addition to checking each of the four side plates and the two end plates for stability in accordance with Eq. (1) above, the cross section shall be checked for column stability in accordance with Eq. (14) as follows:

$$\frac{S_a}{F_a} + \frac{S_b}{(1 - S_a/F'_e)S} \le 1.0 \quad (14)$$

where

$$S_a = \frac{P_e h_o H_o}{2(t_1 H_o + t_2 h_o)} \quad (15)^5$$

when

$$2L_v/R_1 \le C_c$$

$$F_a = \frac{\left[1 - \frac{(2L_v/R_1)^2}{2C_c^2}\right] S_y}{\frac{5}{3} + \frac{3(2L_v/R_1)}{8C_c} - \frac{(2L_v/R_1)^3}{8C_c^3}} \quad (16A)$$

when

$$2L_v/R_1 > C_c$$

$$F_a = \frac{12\pi^2 E_2}{23(2L_v/R_1)^2} \quad (16B)$$

$$C_c = \sqrt{\frac{2\pi^2 E_2}{S_y}} \quad (17)$$

$$S_b = \frac{Mc_1}{I_e} \quad (18)$$

$$M = P_e h_o H_o \bar{y} \quad (19)$$

$$F'_e = \frac{12\pi^2 E_2}{23(2L_v/R_1)^2} \quad (20)$$

13-15 FABRICATION

(a) Fabrication of vessels shall be in accordance with applicable parts of Subsection A and Subsection B, Part UW, except as otherwise provided for in this Appendix. Category A joints (see UW-3) may be of Type No. (3) of Table UW-12 when the thickness does not exceed $^5/_8$ in. (16 mm).

(b) This Appendix covers fabrication of vessels by welding. Other methods of fabrication are permissible provided the requirements of applicable parts of this Section are met.

13-16 INSPECTION

Inspection and testing shall be carried out as stated in Subsection A.

13-17 EXAMPLES

Examples illustrating use of the rules of this Appendix are as follows:

13-17(a) Rules of 13-7(a). A vessel of rectangular cross section [Fig. 13-2(a) sketch (1)] consists of plain short-side and end plates, a long-side plate with uniform 1.5 in. diameter holes on a 3.75 in. pitch, and a long-side plate with multidiameter holes on a 3.75 in. pitch. The internal design pressure is 115 psi at a design temperature of 650°F. Material is SA-515 Grade 70 steel. There is no corrosion allowance and the vessel is spot radiographed; $E = 0.8$. The following additional data are given.

Short-Side Plate Thickness. (Butt welded at Location N)

$$t_1 = 0.625 \text{ in.}$$

Long-Side Plate Thickness

$$t_2 = 1.00 \text{ in.}$$

End Plate Thickness

$$t_5 = 0.50 \text{ in.}$$

Short-Side Inside Length

$$H = 6.00 \text{ in.}$$

Long-Side Inside Length

$$h = 13.5 \text{ in.}$$

Multidiameter Hole Dimensions

$$d_o = 1.75 \text{ in.}$$

$$d_1 = 1.25 \text{ in.}$$

$$T_o = 0.625 \text{ in.}$$

$$T_1 = 0.375 \text{ in.}$$

Per Table UW-12 for Type 2 joint,

$$E = 0.80$$

From 13-6(a), $e_m = e_b = (3.75 - 1.5)/3.75 = 0.60$ for the side plate with uniform diameter holes. For the other side plate, $e_m = (3.75 - D_E)/3.75$ where $D_E = 1.75$ (0.625) plus 1.25 (0.375) = 1.5625 in. Thus, $e_m = (3.75 - 1.5625)/3.75 = 0.58$. These efficiencies are less than $E = 0.8$ [see 13-4(g)]; therefore, these values will be used. According to 13-6(b) for bending ligament efficiency,

$$\bar{X} = \frac{2(0.625)(0.3125 + 0.375) + 2.5(0.375)(0.1875)}{1.250 + 0.9375}$$

$$c_i = \bar{X} = 0.473 \text{ in.}$$

$$I = \frac{1}{6}(0.625)^3 + \frac{2.5}{12}(0.375)^3 + 1.25\,(0.3125 + 0.375 - 0.473)^2 + 2.5\,(0.375)\,(0.1875 - 0.473)^2 = 0.1856 \text{ in.}^4$$

$$c_o = -(1 - 0.473) = -0.527 \text{ in.}$$

$$D_E = 3.75 - \frac{6(0.1856)}{1^2(0.527)} = 1.637 \text{ in.}$$

$$e_b = (3.75 - 1.637)/3.75 = 0.56$$

$$\alpha = 0.44,\ K = 1.82$$

The membrane stresses are as follows:

Short-Side Plates

$$S_m = \frac{115(13.5)}{2(0.625)} = 1242 \text{ psi}$$

Long-Side Plate ($e_m = 0.60$)[7] From Eq. (2) and 13-4(g)

$$S_m = \frac{115(6)}{(2)(0.60)(1.0)} = 575 \text{ psi}$$

Long-Side Plate ($e_m = 0.58$)[7] From Eq. (2) and 13-4(g)

$$S_m = \frac{115(6)}{2(0.58)(1.0)} = 595 \text{ psi}$$

The bending stresses are as follows:

Short-Side Plates

$$(S_b)_N = \frac{115(\pm 0.3125)}{0.625^3} \times \left[-54 + 182.25\left(\frac{1.352}{2.82}\right)\right]$$

Inner, $(S_b)_N = 4{,}913$ psi tension

Outer, $(S_b)_N = -4{,}913$ psi compression

$$(S_b)_Q = \frac{115(13.5)^2\,(\pm 0.3125)}{0.625^3}\left(\frac{1.352}{2.82}\right)$$

Inner, $(S_b)_Q = 12{,}862$ psi tension

Outer, $(S_b)_Q = -12{,}862$ psi compression

Long-Side Plate ($e_b = 0.60$)[7]

$$(S_b)_M = \frac{115(13.5)^2(\pm 0.50)}{1^3(0.60)}\left(-1.5 + \frac{1.352}{2.82}\right)$$

Inner, $(S_b)_M = -17{,}825$ psi compression

Outer, $(S_b)_M = 17{,}825$ psi tension

[7] See 13-4(g) for use of ligament efficiencies.

(2) Bending Stress. Equations (13), (14), (15), (16), (17), and (18) of 13-7 multiplied by the plate parameters of Table 13-18(b) shall be used to determine the bending stress as follows:

Short-Side Plates

$$(S_b)_Q = \text{Eq. (13)} \times J_3$$

$$(S_b)_{Q1} = \text{Eq. (14)} \times J_3$$

Long-Side Plates

$$(S_b)_M = \text{Eq. (15)} \times J_2$$

$$(S_b)_{M1} = \text{Eq. (16)} \times J_2$$

$$(S_b)_Q = \text{Eq. (17)} \times J_3$$

$$(S_b)_{Q1} = \text{Eq. (18)} \times J_3$$

(3) Total Stress

Short-Side Plates

$$(S_T)_Q = \text{Eq. (11)} + \text{Eq. (13)}$$

$$(S_T)_{Q1} = \text{Eq. (11)} + \text{Eq. (14)}$$

TABLE 13-18(b)

L_v/H or L_v/h	J_2	J_3
1.0	0.56	0.62
1.1	0.64	0.70
1.2	0.73	0.77
1.3	0.79	0.82
1.4	0.85	0.87
1.5	0.89	0.91
1.6	0.92	0.94
1.7	0.95	0.96
1.8	0.97	0.97
1.9	0.99	0.99
2.0	1.00	1.00

Long-Side Plates

$$(S_T)_M = \text{Eq. (12B)} + \text{Eq. (15)}$$

$$(S_T)_{M1} = \text{Eq. (12A)} + \text{Eq. (16)}$$

$$(S_T)_Q = \text{Eq. (12B)} + \text{Eq. (17)}$$

$$(S_T)_{Q1} = \text{Eq. (12A)} + \text{Eq. (18)}$$

MANDATORY APPENDIX 14
INTEGRAL FLAT HEADS WITH A LARGE, SINGLE, CIRCULAR, CENTRALLY LOCATED OPENING

14-1 SCOPE

04 A05

14-1(a) In accordance with UG-39(c)(1), flat heads which have a single, circular, centrally located opening that exceeds one-half of the head diameter shall be designed according to the rules which follow. The shell-to-flat head juncture shall be either integral, as shown in Fig. UG-34 sketches (a), (b-1), (b-2), (d), and (g), or a butt weld, or a full penetration corner weld similar to the joints shown in Fig. UW-13.2 sketches (a), (b), (c), (d), (e), and (f). When Fig. UW-13.2 sketches (c) and (d) are used, the maximum wall thickness of the shell shall not exceed $\frac{3}{8}$ in. (10 mm) and the maximum design metal temperature shall not exceed 650°F (345°C). The central opening in the flat head may have a nozzle which is integral or integrally attached by a full penetration weld or may have an opening without an attached nozzle or hub. For openings in which the nozzle is attached with non-integral welds (i.e., a double fillet or partial penetration weld) use the design rules for an opening without an attached nozzle or hub.

14-1(b) A general arrangement of an integral flat head with or without a nozzle attached at the central opening is shown in Fig. 14-1.

14-1(c) The head thickness does not have to be calculated by UG-34 rules. The thickness which satisfies all the requirements of this Appendix meets the requirements of the Code.

14-2 NOMENCLATURE

14-2(a) Except as given below, the symbols used in the equations of this Appendix are defined in 2-3.

A = outside diameter of flat head and shell
B_n = diameter of central opening (for nozzle, this is inside diameter and for opening without nozzle, diameter of opening)
B_s = inside diameter of shell (measured below tapered hub, if one exists)
$(E\theta)^*$ = slope of head with central opening or nozzle times the modulus of elasticity, disregarding the interaction of the integral shell at the outside diameter of the head, psi (MPa)
M_H = moment acting at shell-to-flat head juncture
P = internal design pressure (see UG-21)
t = flat head nominal thickness

B_1, F, S_H, S_R, S_T, V, f, g_o, g_1, and h_o are defined in 2-3. These terms may refer to either the shell-to-flat head juncture or to the central opening-to-flat head juncture and depend upon details at those junctures.

14-3 DESIGN PROCEDURE

14-3(a) Disregard the shell attached to the outside diameter of the flat head and then analyze the flat head with a central opening (with or without a nozzle) in accordance with these rules.

14-3(a)(1) Calculate the operating moment M_o according to 2-6. (There is no M_o for gasket seating to be considered.) The formulas in Appendix 2 for loads (2-3) and moment arms (Table 2-6) shall be used directly with the following definitions and terms substituted for terms in Appendix 2:

Let $C = G$ = inside diameter of shell B_s; $B = B_n$, where B_n is as shown in Fig. 14-1 depending on an integral nozzle or no nozzle.

The moment arm h_g in Table 2-6 will be equal to zero when using the rules of this Appendix. The M_G moment will therefore be equal to zero.

14-3(a)(2) With $K = A/B_n$, use 2-7 to calculate the stresses S_H, S_R, and S_T. The S_H and S_R stresses are equal to zero for the case of an opening without a nozzle.

14-3(b) Calculate $(E\theta)^*$:

14-3(b)(1) for an integrally attached nozzle,

$$(E\theta)^* = \frac{0.91\,(g_1/g_o)^2\,B_1\,V}{f\,h_o} S_H$$

14-3(b)(2) for an opening without a nozzle or with a nozzle or hub attached with a non-integral weld, 04

MANDATORY APPENDIX 16
SUBMITTAL OF TECHNICAL INQUIRIES TO THE BOILER AND PRESSURE VESSEL COMMITTEE

A05

16-1 INTRODUCTION

(a) This Appendix provides guidance to Code users for submitting technical inquiries to the Committee. See Guideline on the Approval of New Materials Under the ASME Boiler and Pressure Vessel Code in Section II, Parts C and D for additional requirements for requests involving adding new materials to the Code. Technical inquiries include requests for revisions or additions to the Code rules, requests for Code Cases, and requests for Code interpretations, as described below.

(1) Code Revisions. Code revisions are considered to accommodate technological developments, address administrative requirements, incorporate Code Cases, or to clarify Code intent.

(2) Code Cases. Code Cases represent alternatives or additions to existing Code rules. Code Cases are written as a question and reply, and are usually intended to be incorporated into the Code at a later date. When used, Code Cases prescribe mandatory requirements in the same sense as the text of the Code. However, users are cautioned that not all jurisdictions or owners automatically accept Code Cases. The most common applications for Code Cases are:

(a) to permit early implementation of an approved Code revision based on an urgent need

(b) to permit the use of a new material for Code construction

(c) to gain experience with new materials or alternative rules prior to incorporation directly into the Code

(3) Code Interpretations. Code Interpretations provide clarification of the meaning of existing rules in the Code, and are also presented in question and reply format. Interpretations do not introduce new requirements. In cases where existing Code text does not fully convey the meaning that was intended, and revision of the rules is required to support an interpretation, an Intent Interpretation will be issued and the Code will be revised.

(b) The Code rules, Code Cases, and Code Interpretations established by the Committee are not to be considered as approving, recommending, certifying, or endorsing any proprietary or specific design, or as limiting in any way the freedom of manufacturers, constructors, or owners to choose any method of design or any form of construction that conforms to the Code rules.

(c) Inquiries that do not comply with the provisions of this Appendix or that do not provide sufficient information for the Committee's full understanding may result in the request being returned to the inquirer with no action.

16-2 INQUIRY FORMAT

Submittals to the Committee shall include:

(a) Purpose. Specify one of the following:

(1) revision of present Code rules

(2) new or additional Code rules

(3) Code Case

(4) Code Interpretation

(b) Background. Provide the information needed for the Committee's understanding of the inquiry, being sure to include reference to the applicable Code Section, Division, Edition, Addenda, paragraphs, figures, and tables. Preferably, provide a copy of the specific referenced portions of the Code.

(c) Presentations. The inquirer may desire or be asked to attend a meeting of the Committee to make a formal presentation or to answer questions from the Committee members with regard to the inquiry. Attendance at a Committee meeting shall be at the expense of the inquirer. The inquirer's attendance or lack of attendance at a meeting shall not be a basis for acceptance or rejection of the inquiry by the Committee.

16-3 CODE REVISIONS OR ADDITIONS

Requests for Code revisions or additions shall provide the following:

(a) Proposed Revisions or Additions. For revisions, identify the rules of the Code that require revision and

submit a copy of the appropriate rules as they appear in the Code, marked up with the proposed revision. For additions, provide the recommended wording referenced to the existing Code rules.

(b) Statement of Need. Provide a brief explanation of the need for the revision or addition.

(c) Background Information. Provide background information to support the revision or addition, including any data or changes in technology that form the basis for the request that will allow the Committee to adequately evaluate the proposed revision or addition. Sketches, tables, figures, and graphs should be submitted as appropriate. When applicable, identify any pertinent paragraph in the Code that would be affected by the revision or addition and identify paragraphs in the Code that reference the paragraphs that are to be revised or added.

16-4 CODE CASES

Requests for Code Cases shall provide a Statement of Need and Background Information similar to that defined in 16-3(b) and 16-3(c), respectively, for Code revisions or additions. The urgency of the Code Case (e.g., project underway or imminent, new procedure, etc.) must be defined and it must be confirmed that the request is in connection with equipment that will be ASME stamped, with the exception of Section XI applications. The proposed Code Case should identify the Code Section and Division, and be written as a *Question* and a *Reply* in the same format as existing Code Cases. Requests for Code Cases should also indicate the applicable Code Editions and Addenda to which the proposed Code Case applies.

16-5 CODE INTERPRETATIONS

(a) Requests for Code Interpretations shall provide the following:

(1) Inquiry. Provide a condensed and precise question, omitting superfluous background information and, when possible, composed in such a way that a "yes" or a "no" *Reply,* with brief provisos if needed, is acceptable. The question should be technically and editorially correct.

(2) Reply. Provide a proposed *Reply* that will clearly and concisely answer the *Inquiry* question. Preferably, the *Reply* should be "yes" or "no," with brief provisos if needed.

(3) Background Information. Provide any background information that will assist the Committee in understanding the proposed *Inquiry* and *Reply.*

(b) Requests for Code Interpretations must be limited to an interpretation of a particular requirement in the Code or a Code Case. The Committee cannot consider consulting type requests such as the following:

(1) a review of calculations, design drawings, welding qualifications, or descriptions of equipment or parts to determine compliance with Code requirements;

(2) a request for assistance in performing any Code-prescribed functions relating to, but not limited to, material selection, designs, calculations, fabrication, inspection, pressure testing, or installation;

(3) a request seeking the rationale for Code requirements.

16-6 SUBMITTALS

Submittals to and responses from the Committee shall meet the following:

(a) Submittal. Inquiries from Code users shall be in English and preferably be submitted in typewritten form; however, legible handwritten inquiries will also be considered. They shall include the name, address, telephone number, fax number, and e-mail address, if available, of the inquirer and be mailed to the following address:

Secretary
ASME Boiler and Pressure Vessel Committee
Three Park Avenue
New York, NY 10016-5990

As an alternative, inquiries may be submitted via e-mail to: SecretaryBPV@asme.org.

(b) Response. The Secretary of the ASME Boiler and Pressure Vessel Committee or of the appropriate Subcommittee shall acknowledge receipt of each properly prepared inquiry and shall provide a written response to the inquirer upon completion of the requested action by the Code Committee.

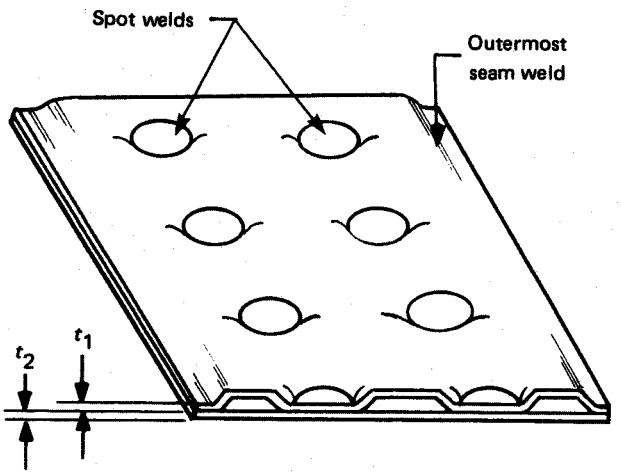

FIG. 17-5 DIMPLED PLATE WELDED TO PLAIN PLATE

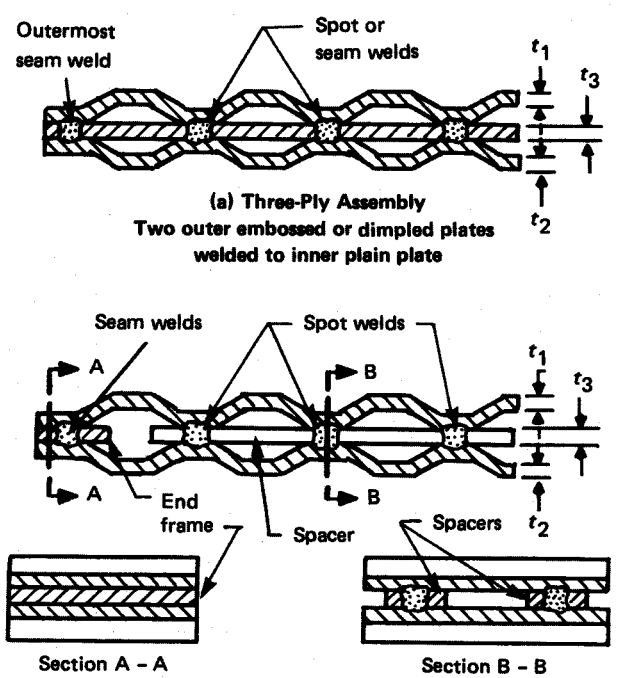

FIG. 17-6 THREE-PLY ASSEMBLIES

17-4 THICKNESS LIMITATIONS A05

The range of thickness of pressure containing parts which may be welded under the provisions of this Appendix shall be limited to that qualified by the welding procedure under the provisions of 17-7. The nominal thickness for plate shall not be less than 0.045 in. (1.1 mm).

17-5 MAXIMUM ALLOWABLE WORKING PRESSURE (MAWP)

The MAWP shall be the lowest pressure established by (a) and (b) below.

(a) Proof Test

(1) For assemblies constructed under the provision of 17-1(a)(1), a proof test shall be conducted in accordance with UG-101. In using the formulas for calculating the MAWP, a value of 0.8 shall be used for E, the weld joint efficiency factor. This test may be a separate test or part of the test in 17-7(a)(1)(a).

(2) For assemblies constructed under the provisions of 17-1(a)(2), a proof test shall be conducted in accordance with the requirements of UG-101 of this Division using the bursting test procedures of UG-101(m) except provisions of UG-101(c) need not be followed provided that, when performing the proof test, the application of pressure is continuous until burst or until the proof test is stopped. In using the formulas for calculating the maximum allowable working pressure, a value of 0.80 shall be used for E, the weld joint efficiency factor. If the spot-welded and seam-welded sheets are formed to any shape other than flat plates prior to the inflating process which results in the dimpled formation, the proof tested vessel or representative panel shall be of a configuration whose curvature is to a radius no greater than that which will be used in production vessels.

(b) Calculations

(1) For assemblies using plain plate welded in accordance with 17-1(b)(2), (b)(4), (b)(6), (b)(7), and (c), calculate the MAWP or minimum thickness of the plain plate by the following formulas:

$$P = \frac{3St^2}{p^2} \quad (1)$$

$$t = p\sqrt{\frac{P}{3S}} \quad (2)$$

where

t = minimum thickness of plate, in. (mm)
P = internal design pressure (see UG-21), psi (kPa)
S = maximum allowable stress value given in Section II, Part D, psi (kPa)
p = maximum pitch measured between adjacent seam weld center lines, in. (mm)

(2) For assemblies using plain plate welded in accordance with 17-1(b)(1), (b)(3), and (b)(5), calculate the MAWP of the plain plate in accordance with the requirements for braced and stayed surfaces. See UG-47.

17-6 DESIGN LIMITATIONS

For assemblies constructed under the provisions of 17-1(a)(2), the following design limitations shall apply.

(a) A change in any of the following variables will require requalification of the design using the proof test of 17-5(a)(2):

(1) an increase in the spot or seam pitch exceeding $1/16$ in. (1.5 mm);

(2) a change in the specification, type, thickness, or grade of material for either sheet or both sheets;

(3) a change in the electrode size or electrode material;

(4) in formed construction when the radius of the curvature is less than the radius in the proof section [see 17-5(a)(2)].

(b) A test panel duplicating that used to establish the maximum allowable working pressure shall be inflated to a pressure at least 5% greater than the maximum forming pressure to be used in production. The rate of pressurization shall be the same as that used in the burst test. The panel shall be sectioned to show at least six spot welds (see Fig. 17-14). The weld cross sections shall be subjected to macroetch examinations and shall show no cracks. The maximum pillow heights measured, as shown in Fig. 17-15, of vessels made in production shall not exceed 95% of the maximum pillow height of this duplicate test panel. The maximum forming pressure shall not exceed 80% of the burst pressure.

17-7 WELDING CONTROL

(a) In lieu of the Procedure Qualification requirements of Section IX, the following requirements shall be met. Performance Qualification for assemblies constructed under the provisions of 17-1(a)(1) shall be performed in accordance with Section IX or the following requirements.

(1) *Proof Testing for Procedure and Performance Qualification*

(a) For assemblies constructed under the provisions of 17-1(a)(1), a pressure proof test to destruction shall be conducted on a finished vessel or representative panel. The test shall be conducted as specified in UG-101(m). If a representative panel is used, it shall be rectangular in shape and at least 5 pitches in each direction, but not less than 24 in. (600 mm) in either direction.

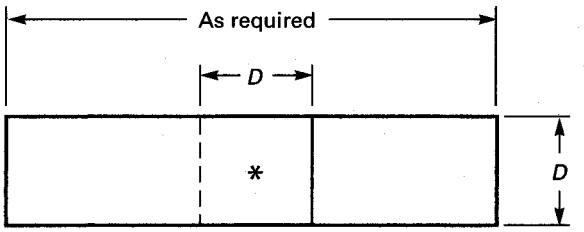

NOTE: 1 in. (25 mm) ≤ D ≤ $1\frac{1}{4}$ in. (32 mm)

FIG. 17-7 SINGLE-SPOT-WELD TENSION SPECIMEN, TWO-PLY JOINT

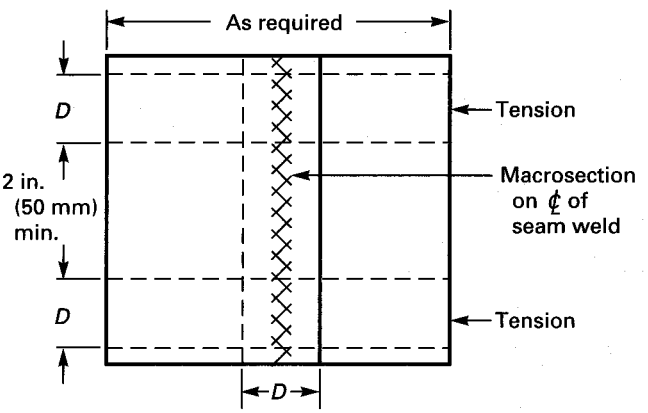

NOTE: 1 in. (25 mm) ≤ D ≤ $1\frac{1}{4}$ in. (32 mm)

FIG. 17-8 SEAM-WELD SPECIMEN FOR TENSION AND MACROSECTION, TWO-PLY JOINT

(b) For assemblies constructed under the provisions of 17-1(a)(2), a pressure proof test to destruction as set forth in 17-5(a)(2) shall be conducted on a finished vessel or representative panel. This test may be a separate test or a part of the test in 17-5(a)(2). If a representative panel is used, it shall be rectangular in shape and at least 5 pitches in each direction but not less than 24 in. (600 mm) in either direction.

(c) Duplicate parts or geometrically similar parts that are fabricated using the same welding process, and meet the requirements of UG-101(d)(1) or UG-101(d)(2) need not be tested.

(2) *Workmanship Samples*

(a) For assemblies for two-ply joints constructed under the provisions of 17-1(b)(1), (b)(2), (b)(4), (b)(5), (b)(6), (b)(7), or (c), three single spot welded specimens or one seam welded specimen, as shown in Figs. 17-7 and 17-8 shall be made immediately before and after the welding of the proof test vessel.

MANDATORY APPENDIX 23
EXTERNAL PRESSURE DESIGN OF COPPER, COPPER ALLOY, AND TITANIUM ALLOY CONDENSER AND HEAT EXCHANGER TUBES WITH INTEGRAL FINS

23-1 SCOPE

The rules in this Appendix cover the proof test procedure and criteria for determining the maximum allowable external working pressure of copper, copper alloy, and titanium alloy condenser and heat exchanger tubes with helical fins that are integrally extended from the tube wall as an alternative to the requirements of UG-8(b)(4). This Appendix may only be used when the specified corrosion allowance for the tubes is zero. In addition, when using SB-543, this Appendix may only be used when the finning operations are performed after the tubes have been welded, tested, and inspected according to SB-543.

23-2 MATERIALS

(a) Copper and copper alloy tubes shall meet SB-359 or SB-543.

04 A05 *(b)* Titanium alloy tubes shall meet SB-338.

04 23-3 TEST PROCEDURE

(a) Test to failure (visible collapse) by external hydrostatic pressure three full size specimens.

(b) The maximum allowable working pressure P shall be determined by

$$P = F\left(\frac{B}{3}\right)\left(\frac{Y_s}{Y_a}\right)$$

where

B = minimum collapse pressure, psi (kPa)
F = factor to adjust for change in strength due to design temperature
= S/S_2
S = maximum allowable stress value for the tube material at design temperature, as given in the tables referenced in UG-23 but not to exceed S_2, psi
S_2 = maximum allowable stress value for the tube material at test temperature, as given in the tables referenced in UG-23, psi
Y_a = actual average yield strength determined from the unfinned length of the three specimens tested at room temperature, psi (kPa)
Y_s = specified minimum yield strength at room temperature, psi (kPa)

23-4 CRITERIA

(a) The design of copper and copper alloy finned tubes to this Appendix shall meet the following requirements.

(1) External design pressure rating shall not exceed 700 psi (4800 kPa).

(2) Design temperature shall not exceed 150°F (65°C), except that when the test specimens are annealed after finning, the design temperature may be the maximum temperature shown on the external pressure chart for the material corresponding to the temper of the unfinned sections of the tubes. 04

(3) Tubes shall have external and/or internal integrally extended helical fins and the sum of external plus internal fins shall be at least 10 fins/in. (10 fins/25 mm).

(4) Dimensions and permissible variations shall be as specified in Item 15 of SB-359.

(b) The design of titanium alloy finned tubes to this Appendix shall meet the following requirements.

(1) External design pressure rating shall not exceed 3,500 psi (24 MPa).

(2) Design temperature shall not exceed 600°F (315°C).

(3) Tubes shall have external integrally extended helical fins only and shall have at least 10 fins/in. (10 fins/25 mm).

(4) Dimensions and permissible variations shall be as specified in item 15 of SB-359 (Specification for Copper and Copper Alloy Seamless Condenser and Heat Exchanger Tubes with Integral Fins).

(c) Additional requirements for copper, copper alloy, and titanium alloy tubes designed to this Appendix are as follows.

(1) Test specimens shall be identical in fin geometry and pitch to production tubes.

(2) Test specimens of 50 outside diameters or more in length shall qualify all totally finned lengths.

(3) Unfinned length at the ends or at an intermediate section shall qualify that length and all lesser unfinned lengths.

(4) Nominal wall thickness under the fin and at the unfinned area shall qualify all thicker wall sections but with no increase in P.

(5) Outside diameter of the finned section shall not exceed the outside diameter of the unfinned section.

(6) Tests shall be done in accordance with 23-3, witnessed by and subjected to the acceptance of the Inspector.

23-5 DATA REPORTS

When all the requirements of this Division and the supplemental requirements of this Appendix have been met, the following notation shall be entered on the Manufacturer's Data Report under Remarks, "Constructed in Conformance with Appendix 23, External Pressure Design of Copper, Copper Alloy, and Titanium Alloy Condenser and Heat Exchanger Tubes With Integral Fins."

MANDATORY APPENDIX 26
PRESSURE VESSEL AND HEAT EXCHANGER EXPANSION JOINTS

04

26-1 SCOPE

The rules in this Appendix apply to single or multiple layer bellows expansion joints, unreinforced, reinforced or toroidal, as shown in Fig. 26-1, subject to internal or external pressure and cyclic displacement. The bellows shall consist of single or multiple identically formed convolutions. They may be as formed (not heat-treated), or annealed (heat-treated). The suitability of an expansion joint for the specified design pressure, temperature, and axial displacement shall be determined by the methods described herein.

26-2 CONDITIONS OF APPLICABILITY

The design rules of this Appendix are applicable only when the following conditions of applicability are satisfied:

(a) The bellows shall be such that: $Nq \le 3D_b$.

(b) The bellows nominal thickness shall be such that $nt \le 0.2$ in. (5.0 mm).

(c) The number of plies shall be such that: $n \le 5$.

A05 *(d)* The displacement shall be essentially axial. However angular and/or lateral deflection inherent in the fit-up of the expansion joint to the pressure vessel is permissible provided the amount is specified and is included in the expansion joint design [see 26-4.1(d)].

(e) The design temperature shall not be in the range where the time-dependent properties govern the allowable stress. For austenitic chromium-nickel stainless steels, UNS N066XX and UNS N04400, the design temperature shall not exceed 800°F (425°C).

26-3 NOMENCLATURE

Symbols used in this Appendix are as follows (see Fig. 26-1):

A = cross-sectional metal area of one convolution

$$A = \left[\left(\frac{\pi - 2}{2}\right) q + 2w\right] nt_p$$

A_c = cross-sectional metal area of all reinforcing collars for toroidal bellows

A_f = cross-sectional metal area of one reinforcing fastener

A_r = cross-sectional metal area of one bellows reinforcing ring member

B_1, B_2, B_3 = coefficients used for toroidal bellows, given by Table 26-8

C_p, C_f, C_d = coefficients for U-shaped convolutions, given by Figs. 26-4, 26-5, and 26-6

C_r = convolution height factor for reinforced bellows

$$C_r = 0.3 - \left(\frac{100}{K_c P^{1.5} + 320}\right)^2$$

K_c = 0.6, where P is expressed in psi

K_c = 1,048, where P is expressed in MPa

C_1, C_2 = coefficients given by equations, used to determine coefficients C_p, C_f, C_d

$$C_1 = \frac{q}{2w}$$

$$C_2 = \frac{q}{2.2\sqrt{D_m t_p}}$$

C_{wc} = longitudinal weld joint efficiency for tangent collar (see UW-12)

C_{wr} = longitudinal weld joint efficiency for reinforcing member (see UW-12)

D_b = inside diameter of bellows convolution and end tangents

D_c = mean diameter of collar

$$D_c = D_b + 2nt + tc$$

D_m = mean diameter of bellows convolution. For U-shaped bellows:

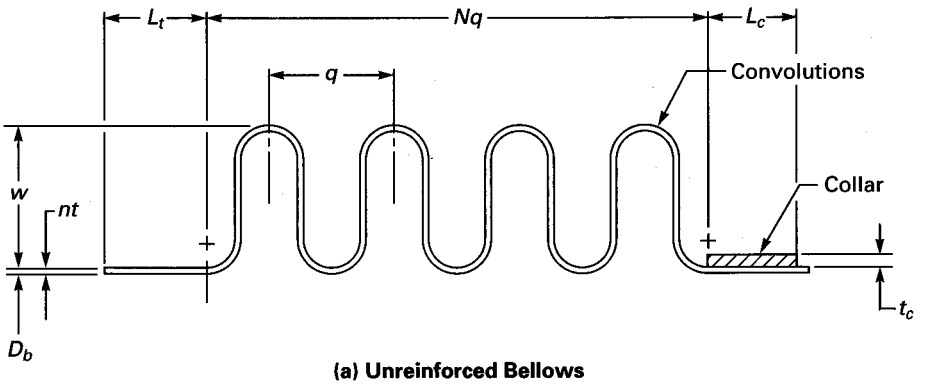

(a) Unreinforced Bellows

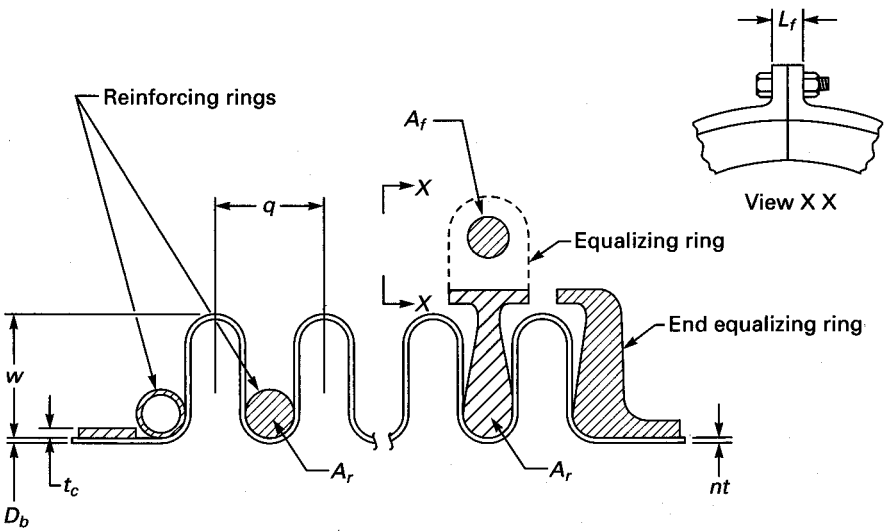

(b) Reinforced Bellows

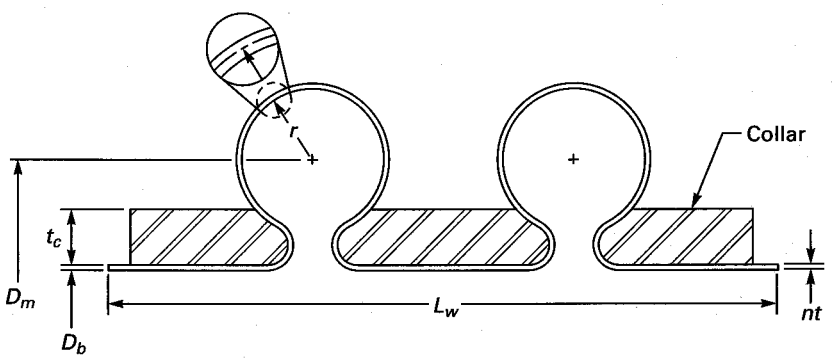

(c) Toroidal Bellows

A05 FIG. 26-1 TYPICAL BELLOWS TYPE EXPANSION JOINTS

$D_m = D_b + w + nt$

E_b = modulus of elasticity of bellows material at design temperature

E_c = modulus of elasticity of collar material at design temperature

E_f = modulus of elasticity of reinforcing fastener material at design temperature

E_r = modulus of elasticity of reinforcing ring member material at design temperature

E_o = modulus of elasticity of bellows material at room temperature

H = resultant total internal pressure force acting on the bellows and reinforcement

$= PD_m q$

K_b = bellows axial stiffness

k = factor considering the stiffening effect of the attachment weld and the end convolution on the pressure capacity of the end tangent

$$k = \text{MIN}\left[\left(\frac{L_t}{1.5\sqrt{D_b t}}\right), (1.0)\right]$$

L_c = bellows collar length

L_t = end tangent length

L_f = effective length of one reinforcing fastener

L_w = distance between toroidal bellows attachment welds

MIN [(a),(b),(c)] = lowest of a, b, c

N = number of convolutions

N_{alw} = allowable number of fatigue cycles

N_{spe} = specified number of fatigue cycles

n = number of plies

P = design pressure (see UG-21). The design pressure should be used as the MAWP.

q = convolution pitch (see Fig. 26-1)

R = ratio of the internal pressure force resisted by the bellows to the internal pressure force resisted by the reinforcement. Use R_1 or R_2 as designated in the equations.

$= R_1$, for integral reinforcing ring members

$$R_1 = \frac{A E_b}{A_r E_r}$$

$= R_2$, for reinforcing ring members joined by fasteners

$$R_2 = \frac{A E_b}{D_m}\left(\frac{L_f}{A_f E_f} + \frac{D_m}{A_r E_r}\right)$$

r = mean radius of toroidal bellows convolution

S = allowable stress of bellows material at design temperature

S_c = allowable stress of collar material at design temperature

S_f = allowable stress of reinforcing fastener material at design temperature

S_r = allowable stress of reinforcing ring member material at design temperature

S_t = total stress range due to cyclic displacement

S_1 = circumferential membrane stress in bellows tangent, due to pressure P

S_1' = circumferential membrane stress in collar, due to pressure P

S_2 = circumferential membrane stress in bellows, due to pressure P

S_2' = circumferential membrane stress in reinforcing member, due to pressure P

S_2'' = membrane stress in fastener, due to pressure member P

S_3 = meridional membrane stress in bellows, due to pressure P

S_4 = meridional bending stress in bellows, due to pressure P

S_5 = meridional membrane stress in bellows, due to total equivalent axial displacement range Δq

S_6 = meridional bending stress in bellows, due to total equivalent axial displacement range Δq

t = nominal thickness of one ply

t_c = collar thickness

t_p = thickness of one ply, corrected for thinning during forming

$$t_p = t\sqrt{\frac{D_b}{D_m}}$$

w = convolution height

Δq = total equivalent axial displacement range per convolution

v_b = Poisson's ratio of bellows material

Main subscripts:

b = for bellows
c = for collars
p = for ply
r = for reinforced
t = for end tangent

NOTE: No subscript is used for the bellows convolutions.

26-4 DESIGN CONSIDERATIONS

26-4.1 General

(a) Expansion joints used, as an integral part of heat exchangers or other pressure vessels shall be designed to provide flexibility for thermal expansion and also to function as a pressure containing element.

(b) The vessel manufacturer shall specify the design conditions and requirements for the detailed design and manufacture of the expansion joint. Use of specification sheet in 26-16 is recommended.

(c) In all vessels with integral expansion joints, the hydrostatic end force caused by pressure and/or the joint spring force shall be resisted by adequate restraint elements (e.g., exchanger tubes or shell, external restraints, anchors, etc.). The stress [see UG-23(c)] in these restraining elements shall not exceed the maximum allowable stress at the design temperature for the material given in the tables referenced by UG-23.

(d) The expansion joints shall be provided with bars or other suitable members for maintaining the proper overall length dimension during shipment and vessel fabrication. Expansion bellows shall not be extended, compressed, rotated, or laterally offset to accommodate connecting parts, which are not properly aligned, unless the design considers such movements. See 26-9.

(e) The minimum thickness limitations of UG-16(b) and UHT-16(b) do not apply to bellows designed to this Appendix.

(f) As stated in U-2(g), this Division does not contain rules to cover all details of design and construction. The criteria in this Appendix are, therefore, established to cover common expansion joint types, but it is not intended to limit configurations or details to those illustrated or otherwise described herein. However, when evaluating designs which differ from the basic concepts of this Appendix (e.g., asymmetric geometries or loadings, external pressure, materials, etc.), the design shall comply with the requirements of U-2(g).

(g) Longitudinal weld seams that comply with 26-10 and 26-11 shall be considered to have a joint efficiency of 1.0.

26-4.2 Fatigue

(a) Cumulative Damage. If there are two or more types of stress cycles, which produce significant stresses, their cumulative effect shall be evaluated as given below.

(1) Designate the specified number of times each type of stress cycle of Types 1, 2, 3, etc., will be repeated during the life of the expansion joint as n_1, n_2, n_3, etc., respectively. In determining n_1, n_2, n_3, etc., consideration shall be given to the superposition of cycles of various origins, which produce a total stress difference range greater than the stress difference ranges of the individual cycles. For example, if one type of stress cycle produces 1,000 cycles of a stress difference variation from zero to +60,000 psi and another type of stress cycle produces 10,000 cycles of a stress difference variation from zero to −50,000 psi, the two types of cycle to be considered are defined by the following parameters:

Type 1 cycle:
$n_1 = 1{,}000$
$S_{t1} = |60{,}000| + |-50{,}000| = 110{,}000$ psi

Type 2 cycle:
$n_2 = 10{,}000 - 1{,}000 = 9{,}000$
$S_{t2} = |0| + |-50{,}000| = 50{,}000$ psi

(2) For each value S_{t1}, S_{t2}, S_{t3}, etc., use the applicable design fatigue curve to determine the maximum number of repetitions which would be allowable if this type of cycle were the only one acting. Call these values N_1, N_2, N_3, etc.

(3) For each type of stress cycle, calculate the usage factors U_1, U_2, U_3, etc., from
$U_1 = n_1 / N_1$
$U_2 = n_2 / N_2$
$U_3 = n_3 / N_3$, etc.

(4) Calculate the cumulative usage factor U from:
$U = U_1 + U_2 + U_3 + \ldots$

(5) The cumulative usuage factor U shall not exceed 1.0.

(b) In complying with the requirements of 26-6.6 (unreinforced bellows), 26-7.6 (reinforced bellows), or 26-8.6 (toroidal bellows), the calculation and relation to fatigue life may be performed by any method based on the theory of elasticity. However, the method must be substantiated by correlation with proof or strain gage testing (UG-101) on a consistent series of bellows of the same basic design (annealed, and as formed bellows are considered as separate designs) by the manufacturer to demonstrate predictability of rupture pressure and cyclic life.

The substantiation of any analytical procedure shall be based on data obtained from five separate tests on bellows of the same basic design. When substantiating bellows

designs with more than two convolutions in series, the test data shall have been obtained from bellows with a minimum of three convolutions.

When compared with the data obtained from the calculation procedure, the test data shall demonstrate that the rupture pressure of the bellows is equal to or greater than three times the maximum allowable working pressure at room temperature.

When S_t along with the other appropriate factors are used in the cycle life equations in 26-6.6 (unreinforced bellows), 26-7.6 (reinforced bellows), or 26-8.6 (toroidal bellows), the required design life N_{alw} shall be less than the calculated cycles to failure based on the data obtained by testing. Design cycle life may not be increased above that obtained from the equations in 26-6.6, 26-7.6, or 26-8.6 regardless of the test results. The substantiation of analytical procedures shall be available for review by the Inspector.

26-5 MATERIALS

Pressure-retaining component materials including the restraining elements covered by 26-4.1(c) shall comply with the requirements of UG-4.

26-6 DESIGN OF U-SHAPED UNREINFORCED BELLOWS

A05 26-6.1 Scope

These rules cover the design of bellows having unreinforced U-shaped convolutions.

Each half convolution consists of a sidewall and two tori of nearly the same radius (at the crest and root of the convolution), in the neutral position, so that the convolution profile presents a smooth geometrical shape as shown in Fig. 26-1.

26-6.2 Conditions of Applicability

These conditions of applicability apply in addition to those listed in 26-2.

(a) A variation of 10% between the crest convolution radius r_{ic} and the root convolution radius r_{ir} is permitted (see Fig. 26-2 for the definitions of r_{ic} and r_{ir}).

A05 *(b)* The torus radius shall be such that $r_i \geq 3t$ where

$$r_i = \frac{r_{ic} + r_{ir}}{2}$$

(c) The offset angle of the sidewalls, α, in the neutral position shall be such that $-15 \leq \alpha \leq +15$ deg (see Fig. 26-2).

In this case, q is defined as the length between two consecutive convolutions when their sidewalls have been made parallel.

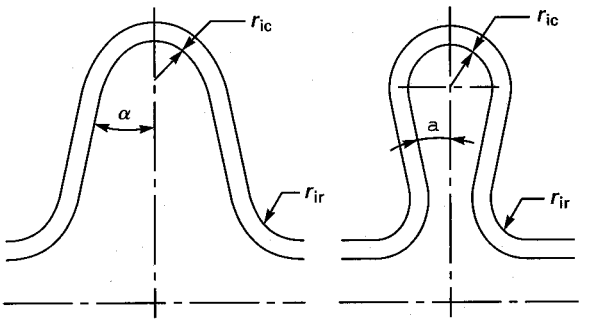

FIG. 26-2 POSSIBLE CONVOLUTION PROFILE IN THE NEUTRAL POSITION

(d) The convolution height shall be such that:

$$w \leq \frac{D_b}{3}$$

26-6.3 Internal Pressure Capacity

26-6.3.1 End Tangent. The circumferential membrane stress due to pressure

$$S_1 = \frac{1}{2} \frac{(D_b + nt)^2 L_t E_b k}{nt (D_b + nt) L_t E_b + t_c D_c L_c E_c k} P$$

shall comply with: $S_1 \leq S$.

26-6.3.2 Collar. The circumferential membrane stress due to pressure

$$S'_1 = \frac{1}{2} \frac{D_c^2 L_t E_c k}{nt (D_b + nt) L_t E_b + t_c D_c L_c E_c k} P$$

shall comply with $S'_1 \leq C_{wc} S_c$.

26-6.3.3 Bellows Convolutions

(a) The circumferential membrane stress due to pressure

(1) for end convolutions

$$S_{2,E} = \frac{1}{2} \frac{qD_m + L_t (D_b + nt)}{A + nt_p L_t} P$$

shall comply with $S_{2,E} \leq S$;

(2) for intermediate convolutions; and

$$S_{2,I} = \frac{1}{2} \frac{qD_m}{A} P$$

shall comply with $S_{2,I} \leq S$.

(b) The meridional membrane stress due to pressure is given by

$$S_3 = \frac{w}{2nt_p} P$$

(c) The meridional bending stress due to pressure is given by

$$S_4 = \frac{1}{2n}\left(\frac{w}{t_p}\right)^2 C_p P$$

(d) The meridional membrane and bending stresses shall comply with: $S_3 + S_4 \le K_f S$

where

$K_f = 3.0$, for as-formed bellows
$K_f = 1.5$, for annealed bellows

26-6.4 Instability Due to Internal Pressure

26-6.4.1 Column Instability. The allowable internal design pressure to avoid column instability is given by:

when

$$\frac{Nq}{D_b} \ge C_z$$

$$P_{sc} = 0.34\,\frac{\pi K_b}{Nq}$$

when

$$\frac{Nq}{D_b} < C_z$$

$$P_{sc} = 0.87\,\frac{AS_y^*}{D_b q}\left[1 - \frac{0.73\,Nq}{C_z D_b}\right]$$

where

$$C_z = \sqrt{4.72\,\frac{NK_b q^2}{S_y^* D_b A}}$$

S_y^* is the effective yield strength at design temperature (unless otherwise specified) of bellows material in the as-formed or annealed conditions.

In the absence of values for S_y^* in material standards, the following values shall be used:

$S_y^* = 2.3\,S_y$, for as-formed bellows
$S_y^* = 0.75\,S_y$, for annealed bellows

where S_y is the yield strength of bellow materials at design temperature, given by Section II-D, Table Y-1. For materials not listed in Section II-D, Table Y-1, see UG-28.

Higher values of S_y^* may be used if justified by representative tests. The internal pressure shall not exceed P_{sc}: $P \le P_{sc}$.

A05 **26-6.4.2 In-Plane Instability.** The allowable internal design pressure based on in-plane instability is given by

$$P_{si} = (\pi - 2)\,\frac{AS_y^*}{D_m q\sqrt{\alpha}}$$

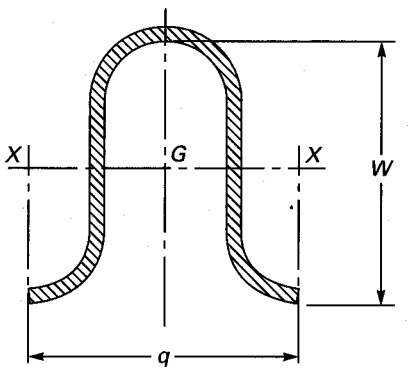

FIG. 26-3 DIMENSIONS TO DETERMINE I_{xx}

where

$$\alpha = 1 + 2\delta^2 + \sqrt{1 - 2\delta^2 + 4\delta^4}$$

with

$$\delta = \frac{1}{3}\,\frac{S_4}{S_{2,I}}$$

The internal pressure shall not exceed P_{si}: $P \le P_{si}$.

26-6.5 External Pressure Strength

26-6.5.1 External Pressure Capacity. The rules of 26-6.3 shall be applied taking P as the absolute value of the external pressure.

NOTE: When the expansion bellows is submitted to vacuum, the design shall be performed assuming that only the internal ply resists the pressure. The pressure stress equations of 26-6.3 shall be applied with $n = 1$.

26-6.5.2 Instability Due to External Pressure. This design shall be performed according to the rules of UG-29 by replacing the bellows with an equivalent cylinder, using:

(a) an equivalent outside diameter, D_{eq}, given by A05

$$D_{eq} = D_b + w + 2e_{eq}$$

(b) an equivalent thickness, e_{eq}, given by A05

$$e_{eq} = \sqrt[3]{12\,(1 - \nu_b^2)\,\frac{I_{xx}}{q}}$$

where I_{xx} is the moment of inertia of one convolution cross section relative to the axis passing by the center of gravity and parallel to the axis of the bellows (see Fig. 26-3).

NOTE: If $L_t = 0$, then I_{xx} is given by

$$I_{xx} = nt_p\left[\frac{(2w - q)^3}{48} + 0.4q(w - 0.2q)^2\right]$$

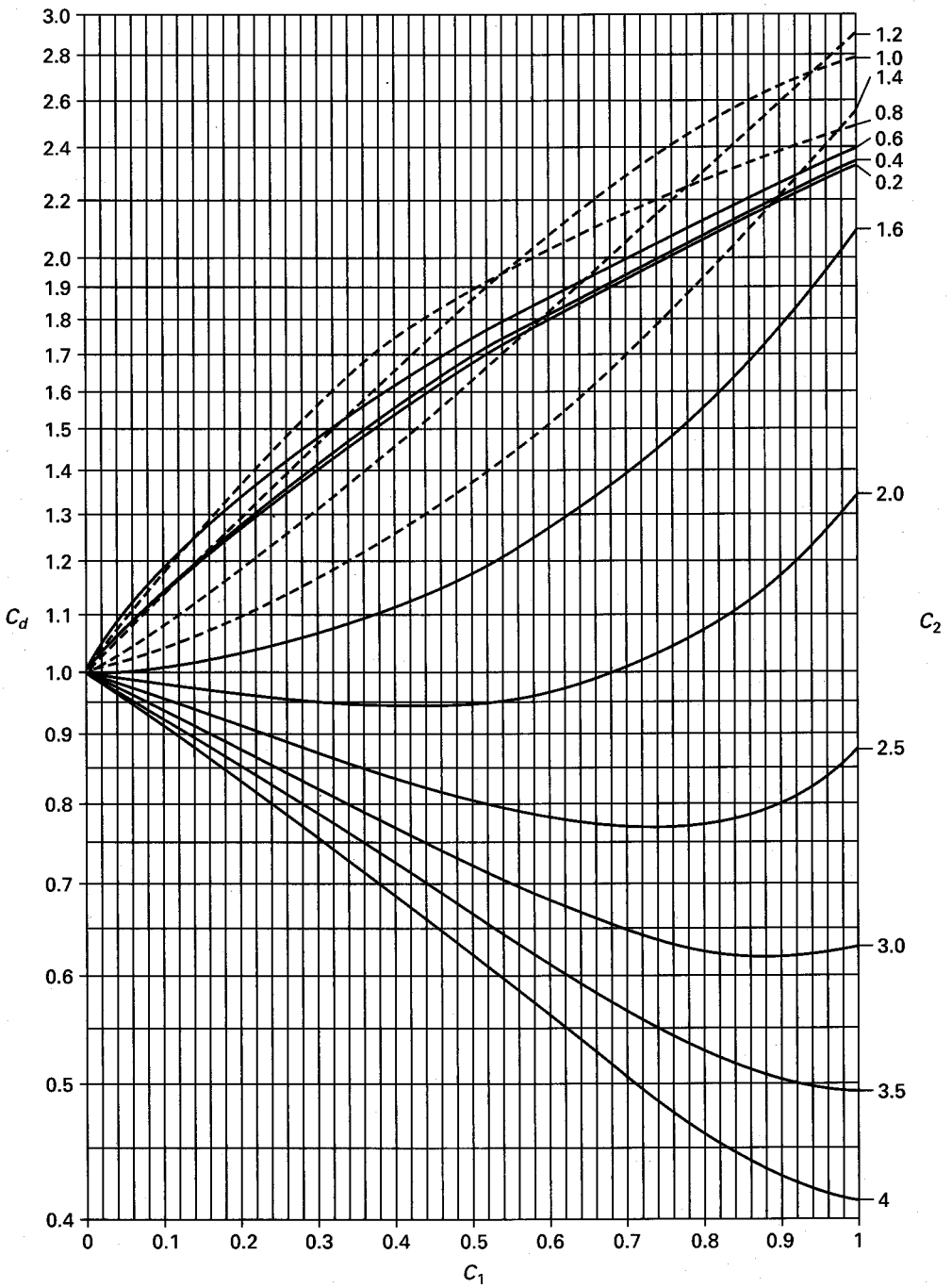

GENERAL NOTE: Paragraph 26-15 gives polynomial approximations for these curves when $0.2 \le C_2 \le 4.0$.

FIG. 26-6 COEFFICIENT C_d

26-6.6 Fatigue Evaluation

26-6.6.1 Calculation of Stresses Due to the Total Equivalent Axial Displacement Range Δq of Each Convolution

(a) Meridional membrane stress:

$$S_5 = \frac{1}{2}\frac{E_b t_p^2}{w^3 C_f}\Delta q$$

(b) Meridional bending stress:

$$S_6 = \frac{5}{3}\frac{E_b t_p}{w^2 C_d}\Delta q$$

26-6.6.2 Calculation of Total Stress Range Due to Cyclic Displacement:

$$S_t = 0.7\,[S_3 + S_4] + [S_5 + S_6]$$

26-6.6.3 Calculation of Allowable Number of Cycles

26-6.6.3.1 General

(a) The specified number of cycles N_{spe} shall be stated as consideration of the anticipated number of cycles expected to occur during the operating life of the bellows. The allowable number of cycles N_{alw}, as derived in this subclause, shall be at least equal to N_{spe}: $N_{alw} \geq N_{spe}$.

The allowable number of cycles given by the following formulas includes a reasonable safety factor (3 on cycles and 1.25 on stresses) and represents the maximum number of cycles for the operating condition considered. Therefore, an additional safety factor should not be applied. An overly conservative estimate of cycles can necessitate a greater number of convolutions and result in a bellows more prone to instability.

A05 *(b)* If the bellows is subjected to different cycles of pressure or displacement, such as those produced by start-up or shutdown, their cumulative damage shall be considered as in 26-4.2(a).

(c) For fatigue correlation testing, see 26-4.2(b).

26-6.6.3.2 Fatigue Equation. The following equations are valid for:

(a) austenitic chromium-nickel stainless steels, UNS N066XX and UNS N04400 for metal temperatures not exceeding 800°F (425°C).

(b) U-shaped unreinforced bellows, as-formed or annealed.

The allowable number of cycles N_{alw} is given by

If $K_g \frac{E_o}{E_b} S_t \geq 65{,}000$ psi (448 MPa)

$$N_{alw} = \left(\frac{K_o}{K_g \frac{E_o}{E_b} S_t - S_o}\right)^2$$

where S_t is expressed in psi: $K_o = 5.2 \times 10^6$, $S_o = 38{,}300$

where S_t is expressed in MPa: $K_o = 35\,850$, $S_o = 264$

If $K_g \frac{E_o}{E_b} S_t < 65{,}000$ psi (448 MPa)

$$N_{alw} = \left(\frac{K_o}{K_g \frac{E_o}{E_b} S_t - S_o}\right)^2$$

where S_t is expressed in psi: $K_o = 6.7 \times 10^6$, $S_o = 30{,}600$

where S_t is expressed in MPa: $K_o = 46\,200$, $S_o = 211$

When

$K_g \frac{E_o}{E_b} S_t \leq 30{,}600$ psi (211 MPa) : then $N_{alw} = 10^6$ cycles

In the above formulas,

K_g = fatigue strength reduction factor which accounts for geometrical stress concentration factors due to thickness variations, weld geometries, surface notches, and other surface or environmental conditions. The range K_g is $1.0 \leq K_g \leq 4.0$ with its minimum value for smooth geometrical shapes and its maximum for 90 deg welded corners and fillet welds. Fatigue strength reduction factors may be determined from theoretical, experimental, or photoelastic studies. A factor has already been included in the above equations for N to account for normal effects of size, environment, and surface finish. For expansion bellows without circumferential welds and meeting all the design and examination requirements of this Appendix, a K_g of 1.0 may be used.

26-6.7 Axial Stiffness

The theoretical axial stiffness of a bellows comprising N convolutions may be evaluated by the following formula:

$$K_b = \frac{\pi}{2(1-\nu_b^2)}\frac{n}{N} E_b D_m \left(\frac{t_p}{w}\right)^3 \frac{1}{C_f}$$

This formula is valid only in the elastic range.

NOTE: Outside of the elastic range, lower values can be used, based upon manufacturer's experience or representative test results.

26-7 DESIGN OF U-SHAPED REINFORCED BELLOWS

26-7.1 Scope

These rules cover the design of bellows having U-shaped convolutions with rings to reinforce the bellows against internal pressure.

Each convolution consists of a sidewall and two tori of the same radius (at the crest and root of the convolution), in the neutral position, so that the convolution profile presents a smooth geometrical shape as shown in Fig. 26-1.

26-7.2 Conditions of Applicability

The following conditions of applicability apply in addition to those listed in 26-2.

(a) A variation of 10% between the crest convolution radius r_{ic} and the root convolution radius r_{ir} is permitted (see Fig. 26-2 for definitions of r_{ic} and r_{ir}).

(b) The torus radius shall be such that $r_i \geq 3t$, where

$$r_i = \frac{r_{ic} + r_{ir}}{2}$$

A05 *(c)* The offset angle of the sidewalls, α, in the neutral position shall be such that $-15 \leq \alpha \leq +15$ deg (see Fig. 26-2). In this case, q is defined as the length between two consecutive convolutions when their sidewalls have been made parallel.

(d) The convolution height shall be such that:

$$w \leq \frac{D_b}{3}$$

26-7.3 Internal Pressure Capacity

26-7.3.1 End Tangent. The circumferential membrane stress due to pressure

$$S_1 = \frac{1}{2} \frac{(D_b + nt)^2 L_t E_b k}{nt (D_b + nt) L_t E_b + t_c D_c L_c E_c k} P$$

shall comply with: $S_1 \leq S$.

26-7.3.2 Collar. The circumferential membrane stress due to pressure

$$S_1' = \frac{1}{2} \frac{D_c^2 L_t E_c k}{nt (D_b + nt) L_t E_b + t_c D_c L_c E_c k} P$$

shall comply with: $S_1' \leq C_{wc} S_c$.

26-7.3.3 Bellows Convolutions

(a) The circumferential membrane stress due to pressure

$$S_2 = \frac{H}{2A} \left(\frac{R}{R + 1} \right)$$

where

$R = R_1$, for integral reinforcing ring members
$R = R_2$, for reinforcing fasteners

shall comply with: $S_2 \leq S$.

NOTE: In the case of reinforcing members which are made in sections, and joined by fasteners in tension, this equation assumes that the structure used to retain the fastener does not bend so as to permit the reinforcing member to expand diametrically. In addition, the end reinforcing members must be restrained against the longitudinal annular pressure load of the bellows.

(b) The meridional membrane stress due to pressure is given by

$$S_3 = 0.85 \frac{w - C_r q}{2nt_p} P$$

(c) The meridional bending stress due to pressure is given by

$$S_4 = \frac{0.85}{2n} \left(\frac{w - C_r q}{t_p} \right)^2 C_p P$$

(d) The meridional membrane and bending stresses shall comply with: $S_3 + S_4 \leq K_f S$

where

$K_f = 3.0$, for as-formed bellows
$K_f = 1.5$, for annealed bellows

26-7.3.4 Reinforcing Ring Member. The cirumferential membrane stress due to pressure:

$$S_2' = \frac{H}{2A_r} \left(\frac{1}{R_1 + 1} \right)$$

shall comply with: $S_2' \leq C_{wr} S_r$

NOTE: In the case of equalizing rings, this equation provides only the simple membrane stress and does not include the bending stress caused by the eccentric fastener location. Elastic analysis and/or actual tests can determine these stresses.

26-7.3.5 Reinforcing Fastener. The membrane stress due to pressure:

$$S_2'' = \frac{H}{2A_f} \left(\frac{1}{R_2 + 1} \right)$$

shall comply with: $S_2'' \leq S_f$

26-7.4 Instability Due to Internal Pressure

26-7.4.1 Column Instability. The allowable internal design pressure to avoid column instability is given by

$$P_{sc} = 0.3 \frac{\pi K_b}{Nq}$$

and shall comply with $P \leq P_{sc}$.

26-7.4.2 In-Plane Instability. Reinforced bellows are not prone to in-plane instability.

26-7.5 External Pressure Strength

26-7.5.1 External Pressure Capacity. The rules of 26-6.3 relative to unreinforced bellows shall be applied A05

taking P as the absolute value of the external pressure.

NOTE: When the expansion bellows is exposed to vacuum, the analysis shall be performed assuming that only the internal ply resists the pressure. The pressure stress equations of 26-6.3 shall be applied with $n = 1$.

26-7.5.2 Instability Due to External Pressure. The circumferential instability of a reinforced bellows shall be calculated in the same manner as for unreinforced bellows. See 26-6.5.2.

26-7.6 Fatigue Evaluation

26-7.6.1 Calculation of Stresses Due to the Total Equivalent Axial Displacement Range of Δq of Each Convolution

(a) Meridional membrane stress:

$$S_5 = \frac{1}{2} \frac{E_b t_p^2}{(w - C_r q)^3 C_f} \Delta q$$

(b) Meridional bending stress:

$$S_6 = \frac{5}{3} \frac{E_b t_p}{(w - C_r q)^2 C_d} \Delta q$$

26-7.6.2 Calculation of Total Stress Range

$$S_t = 0.7 [S_3 + S_4] + [S_5 + S_6]$$

26-7.6.3 Calculation of Allowable Number of Cycles

26-7.6.3.1 General

(a) The specified number of cycles N_{spe} shall be stated as consideration of the anticipated number of cycles expected to occur during the operating life of the bellows. The allowable number of cycles N_{alw}, as derived in this subclause, shall be at least equal to N_{spe}: $N_{alw} \geq N_{spe}$.

The allowable number of cycles given by the following formulas includes a reasonable safety factor (3 on cycles and 1.25 on stresses) and represents the maximum number of cycles for the operating condition considered. Therefore, an additional safety factor should not be applied. An overly conservative estimate of cycles can necessitate a greater number of convolutions and result in a bellows more prone to instability.

(b) If the bellows is submitted to different cycles of pressure or displacement, such as those produced by start-up or shutdown, their cumulative damage shall be considered as in 26-4.2(a).

(c) For fatigue correlation testing, see 26-4.2(b).

26-7.6.3.2 Fatigue Equation. The following equations are valid for:

(a) austenitic chromium-nickel stainless steels, UNS N066XX and UNS N04400 for metal temperatures not exceeding 800°F (425°C).

(b) U-shaped reinforced bellows, as-formed or annealed.

The allowable number of cycles N_{alw} is given by

If $K_g \frac{E_o}{E_b} S_t \geq 82{,}200$ psi (567 MPa)

$$N_{alw} = \left(\frac{K_o}{K_g \frac{E_o}{E_b} S_t - S_o} \right)^2$$

where S_t is expressed in psi: $K_o = 6.6 \times 10^6$, $S_o = 48{,}500$

where S_t is expressed in MPa: $K_o = 45\,505$, $S_o = 334$

If $K_g \frac{E_o}{E_b} S_t < 82{,}200$ psi (567 MPa)

$$N_{alw} = \left(\frac{K_o}{K_g \frac{E_o}{E_b} S_t - S_o} \right)^2$$

where S_t is expressed in psi: $K_o = 8.5 \times 10^6$, $S_o = 38{,}800$

where S_t is expressed in MPa: $K_o = 58\,605$, $S_o = 268$

When

$K_g \frac{E_o}{E_b} S_t \leq 38{,}800$ psi (268 MPa) : then $N_{alw} = 10^6$ cycles

In the above formulas:

K_g = fatigue strength reduction factor which accounts for geometrical stress concentration factors due to thickness variations, weld geometries, surface notches, and other surface or environmental conditions. The range K_g is $1.0 \leq K_g \leq 4.0$ with its minimum value for smooth geometrical shapes and its maximum for 90 deg welded corners and fillet welds. Fatigue strength reduction factors may be determined from theoretical, experimental, or photoelastic studies. A factor has already been included in the above equations for N to account for normal effects of size, environment, and surface finish. For expansion bellows without circumferential welds and meeting all the design and examination requirements of this Appendix, a K_g of 1.0 may be used.

26-7.7 Axial Stiffness

The theoretical axial stiffness of a bellows comprising N convolutions may be evaluated by the following formula:

$$K_b = \frac{\pi}{2(1 - \nu_b^2)} \frac{n}{N} E_b D_m \left(\frac{t_p}{w - C_r q} \right)^3 \frac{1}{C_f}$$

This formula is valid only in the elastic range.

NOTE: Outside of the elastic range lower values can be used, based upon manufacturer's experience or representative test results.

TABLE 26-8
TABULAR VALUES FOR COEFFICIENTS B_1, B_2, B_3

$\frac{6.61r^2}{D_m t_p}$	B_1	B_2	B_3
0	1.0	1.0	1.0
1	1.1	1.0	1.1
2	1.4	1.0	1.3
3	2.0	1.0	1.5
4	2.8	1.0	1.9
5	3.6	1.0	2.3
6	4.6	1.1	2.8
7	5.7	1.2	3.3
8	6.8	1.4	3.8
9	8.0	1.5	4.4
10	9.2	1.6	4.9
11	10.6	1.7	5.4
12	12.0	1.8	5.9
13	13.2	2.0	6.4
14	14.7	2.1	6.9
15	16.0	2.2	7.4
16	17.4	2.3	7.9
17	18.9	2.4	8.5
18	20.3	2.6	9.0
19	21.9	2.7	9.5
20	23.3	2.8	10.0

26-8 DESIGN OF TOROIDAL BELLOWS

26-8.1 Scope

These rules cover the design of bellows having toroidal convolutions. Each convolution consists of a torus of radius r as shown in Fig. 26-1.

26-8.2 Conditions of Applicability

The general conditions of applicability listed in 26-2 apply.

26-8.3 Internal Pressure Capacity

26-8.3.1 End Tangent. The circumferential membrane stress due to pressure:

$$S_1 = \frac{1}{2}\frac{(D_b + nt)^2 L_w E_b}{nt(D_b + nt) L_w E_b + D_c E_c A_c} P$$

shall comply with: $S_1 \le S$.

26-8.3.2 Collar. The circumferential membrane stress due to pressure

$$S_1' = \frac{1}{2}\frac{D_c^2 L_w E_c}{nt(D_b + nt) L_w E_b + D_c E_c A_c} P$$

shall comply with $S_1' \le C_{wc} S_c$.

26-8.3.3 Bellows Convolutions

(a) The circumferential membrane stress due to pressure:

$$S_2 = \frac{r}{2nt_p} P$$

shall comply with $S_2 \le S$.

(b) The meridional membrane stress due to pressure:

$$S_3 = \frac{r}{2nt_p}\left(\frac{D_m - r}{D_m - 2r}\right) P$$

shall comply with $S_3 \le S$.

26-8.4 Instability Due to Internal Pressure

26-8.4.1 Column Instability. The allowable internal design pressure to avoid column instability is given by

$$P_{sc} = \frac{0.15\pi K_b}{Nr}$$

26-8.4.2 In-Plane Instability. Toroidal bellows are not subject to in-plane instability.

26-8.5 External Pressure Strength

26-8.5.1 External Pressure Capacity. The rules of 26-8.3 shall be applied taking P as the absolute value of the external pressure and using $A_c = 0$ in the equations. A05

NOTE: When the expansion bellows is exposed to vacuum, the analysis shall be performed assuming that only the internal ply resists the pressure. The pressure stress equations of 26-8.3 shall be applied with $n = 1$.

26-8.5.2 Instability Due to External Pressure. Instability due to external pressure is not covered by the present rules. A05

26-8.6 Fatigue Evaluation

26-8.6.1 Calculation of Stress Due to the Total Equivalent Axial Displacement Range Δq of Each Convolution

(a) Meridional membrane stress:

$$S_5 = \frac{E_b t_p^2 B_1}{34.3r^3}\Delta q$$

(b) Meridional bending stress:

$$S_6 = \frac{E_b t_p B_2}{5.72r^2}\Delta q$$

26-8.6.2 Calculation of Total Stress Range

$$S_t = 3S_3 + S_5 + S_6$$

26-8.6.3 Calculation of Allowable Number of Cycles

26-8.6.3.1 General

(a) The specified number of cycles N_{spe} shall be stated as consideration of the anticipated number of cycles expected to occur during the operating life of the bellows.

The allowable number of cycles N_{alw}, as derived in this subclause, shall be at least equal to N_{spe}: $N_{alw} \geq N_{spe}$.

The allowable number of cycles given by the following formulas includes a reasonable safety factor (3 on cycles and 1.25 on stresses) and represents the maximum number of cycles for the operating condition considered. Therefore, an additional safety factor should not be applied. An overly conservative estimate of cycles can necessitate a greater number of convolutions and result in a bellows more prone to instability.

(b) If the bellows is submitted to different cycles of pressure or displacement, such as those produced by start-up or shutdown, their cumulative damage shall be considered as in 26-4.2(a).

(c) For fatigue correlation testing, see 26-4.2(b).

26-8.6.3.2 Fatigue Equation. The following equations are valid for:

(a) austenitic chromium-nickel stainless steels, UNS N066XX and UNS N04400 for metal temperatures not exceeding 800°F (425°C).

(b) toroidal reinforced bellows, as-formed or annealed.

The allowable number of cycles N_{alw} is given by

$$\text{If} \quad K_g \frac{E_o}{E_b} S_t \geq 65{,}000 \text{ psi (448 MPa)}$$

$$N_{alw} = \left(\frac{K_o}{K_g \frac{E_o}{E_b} S_t - S_o} \right)^2$$

where S_t is expressed in psi: $K_o = 5.2 \times 10^6$, $S_o = 38{,}300$

where S_t is expressed in MPa: $K_o = 35\,850$, $S_o = 264$

$$\text{If} \quad K_g \frac{E_o}{E_b} S_t < 65{,}000 \text{ psi (448 MPa)}$$

$$N_{alw} = \left(\frac{K_o}{K_g \frac{E_o}{E_b} S_t - S_o} \right)^2$$

where S_t is expressed in psi: $K_o = 6.7 \times 10^6$, $S_o = 30{,}600$

where S_t is expressed in MPa: $K_o = 46\,200$, $S_o = 211$

When

$K_g \frac{E_o}{E_b} S_t \leq 30{,}600$ psi (211 MPa) : then $N_{alw} = 10^6$ cycles

In the above formulas:

K_g = fatigue strength reduction factor which accounts for geometrical stress concentration factors due to thickness variations, weld geometries, surface notches, and other surface or environmental conditions. The range K_g is $1.0 \leq K_g \leq 4.0$ with its minimum value for smooth geometrical shapes and its maximum for 90 deg welded corners and fillet welds. Fatigue strength reduction factors may be determined from theoretical, experimental, or photoelastic studies. A factor has already been included in the above equations for N to account for normal effects of size, environment, and surface finish. For expansion bellows without circumferential welds and meeting all the design and examination requirements of this Appendix, a K_g of 1.0 may be used.

26-8.7 Axial Stiffness

The theoretical axial stiffness of a bellows comprising N convolutions may be evaluated by the following formula:

$$K_b = \frac{1}{12(1 - \nu_b^2)} \frac{n}{N} E_b D_m \left(\frac{t_p}{r} \right)^3 B_3$$

This formula is valid only in the elastic range.

NOTE: Outside of the elastic range lower values can be used, based upon manufacturer's experience or representative test results.

26-9 BELLOWS SUBJECTED TO AXIAL, LATERAL, OR ANGULAR DISPLACEMENTS

26-9.1 General

The purpose of this subclause is to determine the equivalent axial displacement of an expansion bellows subjected at its ends to:

(a) an axial displacement from the neutral position: x in extension ($x>0$), or in compression ($x<0$)

(b) a lateral deflection from the neutral position: y ($y>0$)

(c) an angular rotation from the neutral position: θ ($\theta>0$)

26-9.2 Axial Displacement

When the ends of the bellows are subjected to an axial displacement x (see Fig. 26-7), the equivalent axial displacement per convolution is given by

$$\Delta q_x = \frac{1}{N} x$$

where

x = positive for extension ($x>0$)
= negative for compression ($x<0$)

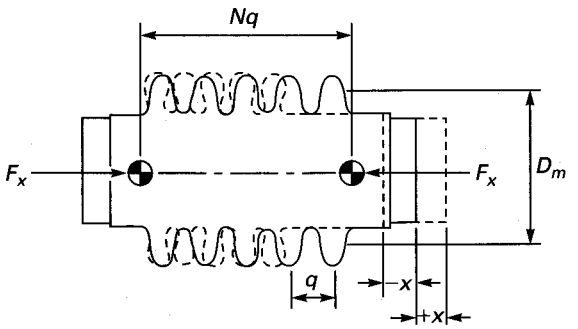

FIG. 26-7 BELLOWS SUBJECTED TO AN AXIAL DISPLACEMENT x

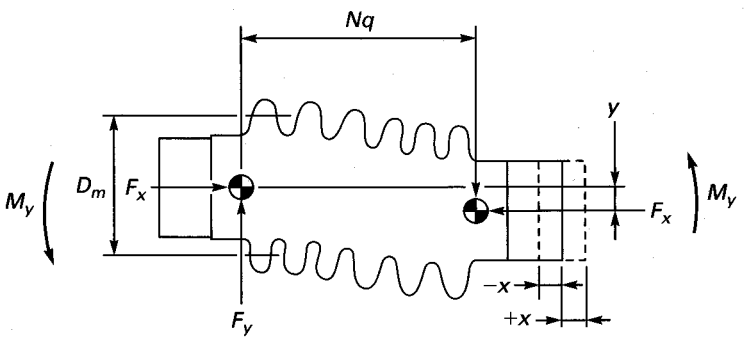

FIG. 26-8 BELLOWS SUBJECTED TO A LATERAL DEFLECTION y

Values of x in extension and compression may be different.

The corresponding axial force F_x applied to the ends of the bellows is given by

$$F_x = K_b x$$

26-9.3 Lateral Deflection

When the ends of the bellows are subjected to a lateral deflection y (see Fig. 26-8), the equivalent axial displacement per convolution is given by

$$\Delta q_y = \frac{3D_m}{N(Nq + x)} y$$

where y shall be taken postive.

The corresponding lateral force F_y applied to the ends of the bellows is given by

$$F_y = \frac{3K_b \cdot D_m^2}{2(Nq + x)^2} y$$

The corresponding moment M_y applied to the ends of the bellows is given by

$$M_y = \frac{3K_b \cdot D_m^2}{4(Nq + x)} y$$

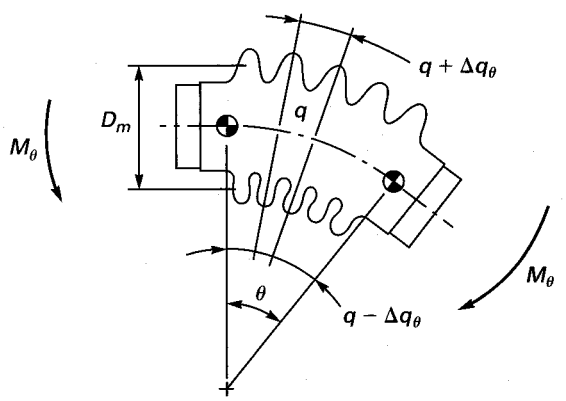

FIG. 26-9 BELLOWS SUBJECTED TO AN ANGULAR ROTATION θ

26-9.4 Angular Rotation

When the ends of the bellows are subjected to an angular rotation θ (see Fig. 26-9), the equivalent axial displacement per convolution is given by

$$\Delta q\theta = \frac{D_m}{2N} \theta$$

where θ, expressed in radians, shall be taken positive.

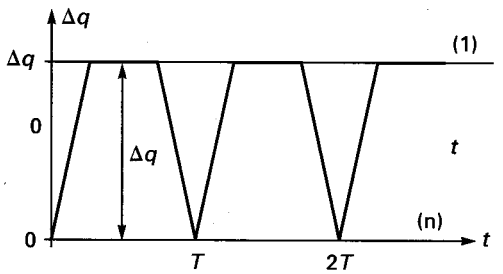

GENERAL NOTES:
(1) operating position Δq
(n) neutral position

FIG. 26-10 CYCLIC DISPLACEMENTS

The corresponding moment M_θ applied to the ends of the bellows is given by

$$M_\theta = \frac{K_b \cdot D_m^2}{8}\,\theta$$

26-9.5 Total Equivalent Axial Displacement Range Per Convolution

26-9.5.1 Equivalent Axial Displacement Per Convolution. The equivalent axial displacement per convolution, in extension or compression, is given by:

$$\Delta q_e = \Delta q_x + \Delta q_y + \Delta q_\theta \qquad \text{(extended convolution)}$$

$$\Delta q_c = \Delta q_x - \Delta q_y - \Delta q_\theta \qquad \text{(compressed convolution)}$$

26-9.5.2 Bellows Installed Without Cold Spring. This subclause applies when the bellows is submitted to displacements (see Fig. 26-10):

(a) from the neutral position ($x_0=0$, $y_0=0$, $\theta_0=0$)

(b) to the operating position (x, y, θ)

The equivalent axial displacement per convolution, in extension or compression, is given by:

$$\Delta q_e = \Delta q_x + \Delta q_y + \Delta q_\theta \qquad \text{(extension)}$$

$$\Delta q_c = \Delta q_x - \Delta q_y - \Delta q_\theta \qquad \text{(compression)}$$

If $x>0$: first formula controls.

If $x<0$: second formula controls.

The total equivalent axial displacement range is given by:

$$\Delta q = \max.\left[\left|\Delta q_e\right|, \left|\Delta q_c\right|\right]$$

26-9.5.3 Bellows Installed With Cold Spring. This subclause applies when the bellows is submitted to displacements (see Fig. 26-11):

(a) from an initial position (x_0, y_0, θ_0), which is not the neutral position.

$$\Delta q_{e,0} = \Delta q_{x,0} + \Delta q_{y,0} + \Delta q_{\theta,0} \qquad \text{(extension)}$$

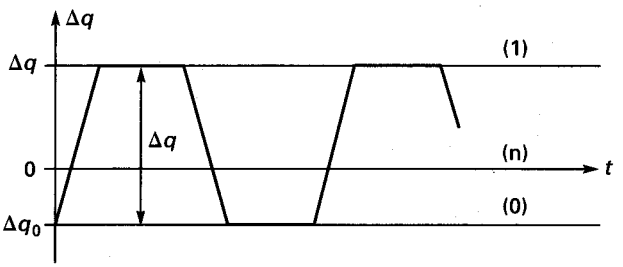

GENERAL NOTES:
(0) initial position Δq_0
(1) operating position Δq
(n) neutral position

FIG. 26-11 CYCLIC DISPLACEMENTS

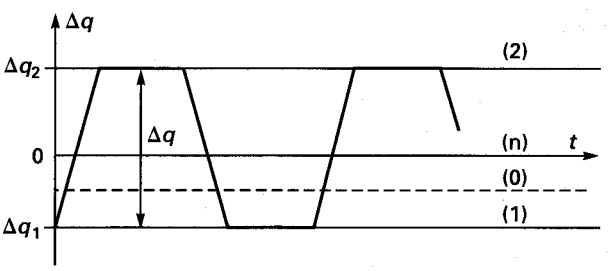

GENERAL NOTES:
(0) initial position 0
(n) neutral position
(1) operating position 1
(2) operating position 2

FIG. 26-12 CYCLIC DISPLACEMENTS

$$\Delta q_{c,0} = \Delta q_{x,0} - \Delta q_{y,0} - \Delta q_{\theta,0} \qquad \text{(compression)}$$

(b) to the operating position (x, y, θ).

$$\Delta q_e = \Delta q_x + \Delta q_y + \Delta q_\theta \qquad \text{(extension)}$$

$$\Delta q_c = \Delta q_x - \Delta q_y - \Delta q_\theta \qquad \text{(compression)}$$

The total equivalent axial displacement range is given by:

$$\Delta q = \max.\left[\left|\Delta q_e - \Delta q_{c,0}\right|, \left|\Delta q_c - \Delta q_{e,0}\right|\right]$$

26-9.5.4 Bellows Operating Between Two Operating Positions. This subclause applies when the bellows is submitted to displacements (see Fig. 26-12):

(a) from the operating position 1 (x_1, y_1, θ_1).

$$\Delta q_{e,1} = \Delta q_{x,1} + \Delta q_{y,1} + \Delta q_{\theta,1} \qquad \text{(extension)}$$

$$\Delta q_{c,1} = \Delta q_{x,1} - \Delta q_{y,1} - \Delta q_{\theta,1} \qquad \text{(compression)}$$

(b) to the operating position 2 (x_2 , y_2 , θ_2).

$$\Delta q_{e,2} = \Delta q_{x,2} + \Delta q_{y,2} + \Delta q_{\theta,2} \qquad \text{(extension)}$$

$$\Delta q_{c,2} = \Delta q_{x,2} - \Delta q_{y,2} - \Delta q_{\theta,2} \qquad \text{(compression)}$$

The total equivalent axial displacement range is given by:

$$\Delta q = \text{max.} \left[\left| \Delta q_{e,2} - \Delta q_{c,1} \right|, \left| \Delta q_{c,2} - \Delta q_{e,1} \right| \right]$$

An initial cold spring (initial position 0) has no effect on the results.

26-10 FABRICATION

The following requirements shall be met in the fabrication of expansion joint flexible elements.

(a) All welded joints shall comply with the requirements of UW-26 through UW-36.

(b) All longitudinal weld seams shall be butt-type full penetration welds; Type (1) of Table UW-12.

(c) Bellows shall be attached to the weld end elements by circumferential butt or full fillet welds as shown in Fig. 26-13.

(d) Other than the attachment welds, no circumferential welds are permitted in the fabrication of bellows convolutions.

26-11 EXAMINATION

The following examinations are required to verify the integrity of expansion joints.

(a) All expansion joint flexible elements shall be visually examined for and shall be free of injurious defects, such as notches, crevices, material buildup or upsetting, weld spatter, etc., which may serve as points of local stress concentrations. Suspect surface areas shall be further exmined by liquid penetrant.

(b) All bellows butt-type welds shall be examined 100% on the inside and outside surfaces by the liquid penetrant method before forming. This examination shall be repeated after forming to the maximum extent possible considering the physical and visual access to the weld surfaces after forming. The butt weld shall be full penetration.

(c) The circumferential attachment welds between the bellows and the weld ends shall be examined 100% by liquid penetrant.

(d) Liquid penetrant examination shall be per Appendix 8. However, any linear indication found by examination shall be considered relevant if the dimension exceeds $t_m/4$, but not less than 0.010 in. (0.25 mm), where t_m is the minimum bellows wall thickness before forming.

26-12 PRESSURE TEST REQUIREMENTS

The pressure testing requirements for expansion joints shall be as follows.

(a) The completed expansion joint shall be subjected to a pressure test in accordance with UG-99 or UG-100. The pressure testing of an expansion joint may be performed as a part of the vessel pressure test, provided the joint is accessible for inspection during pressure testing.

(b) In addition to inspecting the expansion joint for leaks and general structural integrity during the pressure test, an expansion joint shall be inspected before, during, and after the pressure test to confirm that the requirements of 26-6.4 or 26-7.4 are satisfied. A05

(c) Any expansion joint restraining elements [see 26-4.1(c)] shall also be pressure tested in accordance with UG-99 or UG-100 as part of the initial expansion joint pressure test, or as a part of the final vessel pressure test after installation of the joint. A05

26-13 MARKING AND REPORTS

The expansion joint Manufacturer, whether the vessel Manufacturer or a parts Manufacturer, shall have a valid ASME Code U Certificate of Authorization and shall complete the appropriate Data Report in accordance with UG-120.

(a) The Manufacturer responsible for the expansion joint design shall include the following additional data and statements on the appropriate Data Report:

(1) spring rate

(2) axial movement (+ and –), associated design life in cycles, and associated loading condition, if applicable

(3) that the expansion joint has been constructed to the rules of this Appendix

(b) A parts Manufacturer shall identify the vessel for which the expansion joint is intended on the Partial Data Report.

(c) Markings shall not be stamped on the flexible elements of the expansion joint.

26-14 EXAMPLES

Examples illustrating use of the rules of this Appendix are as follows. Please note that the examples in this Appendix were produced using computer software. The results were generated without rounding off during each step. Accuracy of the final results beyond three significant figures is not intended or required.

26-14.1 Examples of 26-6 for Unreinforced Bellows

26-14.1.1 Data Summary. An unreinforced, as-formed, single ply bellows-type expansion joint with a 9

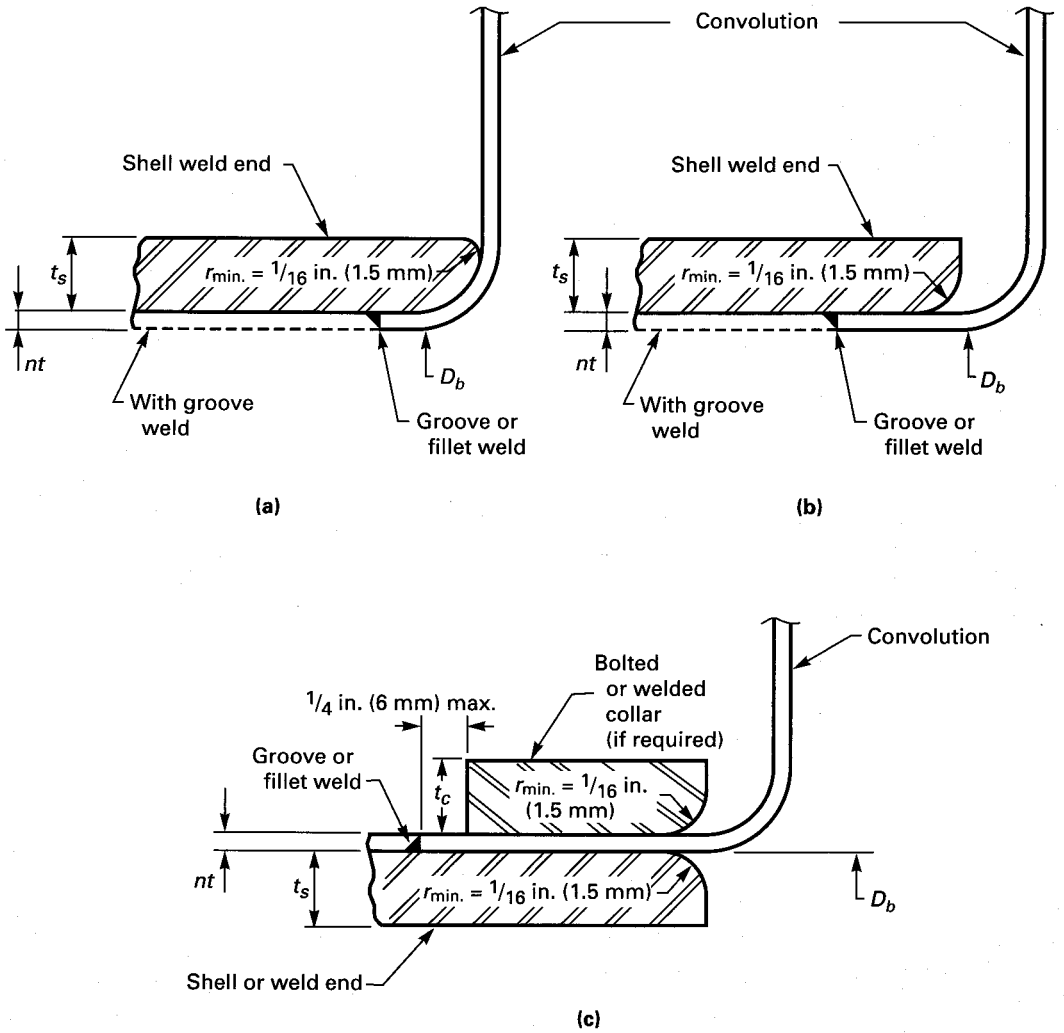

GENERAL NOTE: t_s = minimum required thickness of shell component plus corrosion allowance.

FIG. 26-13 SOME TYPICAL EXPANSION BELLOWS TO WELD END DETAILS

in. cumulative length and axial movement of 1 in. is to be evaluated. The joint material is SA-240 304 stainless steel and the design temperature is 200°F. This joint does not have a collar. Does this expanision joint satisfy the rules of this Appendix?

D_b = 24.0 in.
E_b = 27,600,000 psi
E_o = 28,300,000 psi
K_f = 3.0
K_g = 1.0
L_t = 0.75 in.
N = 8
N_{spe} = 1,000 cycles
n = 1
P = 150 psig
q = 9.0 in./8 = 1.125 in.
Δq = 0.125 in.
S = 20,000 psi
S_y = 25,000 psi
t = 0.05 in.
ν_b = 0.3
w = 1.125 in.

26-14.1.2 Calculation Results. The conditions of applicability per 26-2(a), (b), (c), (d), (e) and 26-6.2(a), (b), (c), (d) must be met. For this symmetric expansion joint all conditions are satisfied.

(a) Mean diameter of bellows convolutions per 26-3:

$$D_m = D_b + w + nt = 25.175 \text{ in.}$$

(b) Thickness of one ply, corrected for thinning during forming per 26-3:

$$t_p = t\sqrt{\frac{D_b}{D_m}} = 0.0488 \text{ in.}$$

(c) Cross-sectional area of one convolution per 26-3:

$$A = \left[\left(\frac{\pi - 2}{2}\right) q + 2w\right] nt_p = 0.1412 \text{ in.}^2$$

(d) Stiffening effect factor k, per 26-3:

$$k = \text{MIN}\left[\left(\frac{L_t}{1.5\sqrt{D_b t}}\right), (1.0)\right] = 0.456$$

(e) Coefficient C_1 per 26-3:

$$C_1 = \frac{q}{2\,w} = 0.500$$

(f) Coefficient C_2 per 26-3:

$$C_2 = \frac{q}{2.2\sqrt{D_m t_p}} = 0.461$$

With the given values of C_1 and C_2 determine the values of C_d, C_f, and C_p from the polynomial series expansion given in 26-15.1 through 26-15.3. Alternatively, these values can be taken from the graphs of Figs. 26-6.1 though 26-6.3.

$C_d = 1.718$
$C_f = 1.686$
$C_p = 0.659$

(g) Circumferential membrane stress due to pressure per 26-6.3.1:

$$S_1 = \frac{1}{2}\frac{(D_b + nt)^2 L_t E_b k}{nt(D_b + nt) L_t E_b + t_c D_c L_c E_c k} P$$

= 16,466 psi, shall be less than or equal to S = 20,000 psi

(h) End convolution membrane stress due to pressure per 26-6.3.3(a):

$$S_{2,E} = \frac{1}{2}\frac{qD_m + L_t(D_b + nt)}{A + nt_p L_t} P$$

= 19,555 psi, shall be less than or equal to S = 20,000 psi

(i) Intermediate convolution membrane pressure stress per 26-6.3.3(a):

$$S_{2,I} = \frac{1}{2}\frac{qD_m}{A} P$$

= 15,044 psi, shall be less than or equal to S = 20,000 psi

(j) Meridional membrane pressure stress per 26-6.3.3(b):

$$S_3 = \frac{w}{2nt_p} P = 1{,}728 \text{ psi}$$

(k) Meridional bending pressure stress per 26-6.3.3(c):

$$S_4 = \frac{1}{2n}\left(\frac{w}{t_p}\right)^2 C_p P = 26{,}239 \text{ psi}$$

(l) Meridional stress summation 26-6.3.3(d):

$S_3 + S_4$ = 27,968 psi, shall be less than or equal to (K_f, S) = 60,000 psi

(m) Instability due to internal pressure per 26-6.4

(1) Axial stiffness factor K_b per 26-6.7:

$$K_b = \frac{\pi}{2(1 - \nu_b^2)}\frac{n}{N} E_b D_m \left(\frac{t_p}{w}\right)^3 \frac{1}{C_f} = 7{,}266 \text{ lb/in.}$$

(2) Transition point factor C_z:

$$C_z = \sqrt{\frac{4.72\,NK_b q^2}{S_y^* D_b A}} = 1.335$$

where $S_y^* = 2.3S_y$ = 57,500 psi

(3) Allowable pressure to avoid column instability per 26-6.4.1:

$$P_{sc} = \frac{0.87\,AS_y^*}{D_b q}\left[1 - \frac{0.73Nq}{C_z D_b}\right]$$

= 208 psi must be greater than P = 150 psi

(4) Allowable pressure to avoid in-plane instability per 26-6.4.2:

$$P_{si} = \frac{1.02\,AS_y^*}{D_m q\sqrt{\alpha}}$$

= 183 psi must be greater than P = 150 psi

where

$$\alpha = 1 + \delta^2 + \sqrt{1 - 2\delta^2 + 4\delta^4} = 2.56$$

$$\text{with: } \delta = \frac{1}{3}\frac{S_4}{S_{2,I}} = 0.582$$

(n) Fatigue Stress Evaluation per 26-6.6

(1) Meridional membrane stress per 26-6.6.1(a):

$$S_5 = \frac{1}{2}\frac{E_b t_p^2}{w^3 C_f}\Delta q = 1{,}713 \text{ psi}$$

(2) Meridional bending stress per 26-6.6.1(b):

$$S_6 = \frac{5}{3}\frac{E_b t_p}{w^2 C_d}\Delta q = 129{,}129 \text{ psi}$$

(3) Total stress range per 26-6.6.2:

$$S_t = 0.7\left[S_3 + S_4\right] + \left[S_5 + S_6\right] = 150{,}420 \text{ psi}$$

(4) Based on the total stress range, determine the allowable number of cycles per 26-6.6.3.2:

$$\text{Since } K_g\frac{E_o}{E_b} S_t = 15{,}423 \text{ psi}$$

≥ 65,000 psi, use the following equation:

$$N_{alw} = \left(\frac{5.2 \times 10^6}{K_g \frac{E_o}{E_b} S_t - 38{,}300} \right)^2$$

= 2,012 cycles, shall be greater than N_{spe} = 1,000 cycles

This expansion joint meets the requirements of this Appendix.

26-14.2 Examples of 26-7 for Reinforced Bellows

A05 **26-14.2.1 Data Summary.** A reinforced, as-formed, single ply bellows-type expansion joint with a 6.75 in. cumulative length is to be evaluated. The 0.5 in. diameter rings and joint material are constructed of SA-240 304 stainless steel. The design temperature is 200°F. Does this expansion joint satisfy the rules of this Appendix?

C_{wc} = 1.0
C_{wr} = 1.0
D_b = 24.0 in.
E_b = 27,600,000 psi
E_c = 27,600,000 psi
E_o = 28,300,000 psi
E_r = 27,600,000 psi
K_f = 3.0
K_g = 1.0
L_c = 0.75 in.
L_t = 1.125 in.
N = 6
n = 1
N_{spe} = 500 cycles
P = 450 psig
q = 6.75 in./6 = 1.125 in.
Δq = 0.1 in.
S = 20,000 psi
S_c = 20,000 psi
S_r = 20,000 psi
t = 0.06 in.
t_c = 0.375 in.
v_b = 0.3
w = 1.25 in.

26-14.2.2 Calculation Results. The conditions of applicability per 26-2(a), (b), (c), (d), (e) and 26-7.2(a), (b), (c), (d) must be met. For this symmetric expansion joint all conditions are satisfied.

(a) Mean diameter of bellows convolutions per 26-3:

$$D_m = D_b + w + nt = 25.310 \text{ in.}$$

(b) Thickness of one ply, corrected for thinning during forming per 26-3:

$$t_p = t \sqrt{\frac{D_b}{D_m}} = 0.0584 \text{ in.}$$

(c) Cross-sectional area of one convolution per 26-3:

$$A = \left[\left(\frac{\pi - 2}{2} \right) q + 2w \right] nt_p = 0.1836 \text{ in.}^2$$

(d) Convolution height factor per 26-3:

$$C_r = 0.3 - \left(\frac{100}{0.6P^{1.5} + 320} \right)^2 = 0.2997$$

(e) Cross-sectional area of the reinforcement per 26-3:

$$A_r = \pi(0.5)^2/4 = 0.1963 \text{ in.}^2$$

(f) Stiffening effect factor k, per 26-3:

$$k = \text{MIN} \left[\left(\frac{L_t}{1.5\sqrt{D_b\, t}} \right), (1.0) \right] = 0.625$$

(g) Coefficient C_1 per 26-3:

$$C_1 = \frac{q}{2\, w} = 0.450$$

(h) Coefficient C_2 per 26-3:

$$C_2 = \frac{q}{2.2\sqrt{D_m\, t_p}} = 0.421$$

With the given values of C_1 and C_2 determine the values of C_d, C_f, C_p from the polynomial series expansion given in 26-15.1 through 26-15.3. Alternatively, these values can be taken from the graphs of Figs. 26-6.1 through 26-6.3.

C_d = 1.639
C_f = 1.638
C_p = 0.689

(i) Resultant total internal pressure force acting on the bellows and reinforcement per 26-3:

$$H = PD_m q = 12{,}813 \text{ lb}$$

(j) Ratio of the internal pressure force resisted by the bellows to the internal pressure force resisted by the reinforcement per 26-3:

$$R_I = \frac{A\, E_b}{A_r\, E_r} = 0.935$$

(k) Mean diameter of end reinforcing collar per 26-3:

$$D_c = D_b + 2\, nt + t_c = 24.495 \text{ in.}$$

(l) Circumferential membrane stress due to pressure per 26-7.3.1 (End Tangent):

$$S_1 = \frac{1}{2} \frac{(D_b + nt)^2\, L_t\, E_b\, k}{nt\,(D_b + nt)\, L_t\, E_b + t_c\, D_c\, L_c\, E_c\, k} P$$

= 15,444 psi, shall be less than or equal to S = 20,000 psi

FORM 26-1 SPECIFICATION SHEET FOR ASME SECTION VIII, DIVISION 1 APPENDIX 26 BELLOWS EXPANSION JOINTS

A05

Date: _____/_____/_____ Applicable ASME Code Edition: _____

1. Item Number: _____ Vessel Manufacturer: _____
2. Drawing/Tag/Serial/Job Number: _____ Vessel Owner: _____
3. Quantity: _____ Installation Location: _____
4. Size: _____ O.D. _____ I.D. in. Expansion Joint Overall Length: _____ in.

5. Internal Pressure: Design: _____ psig
6. External Pressure: Design: _____ psig
7. Vessel Manufacturer Hydrotest Pressure: Internal: _____ psig External: _____ psig

8. Temperature: Design: _____ °F Operating: _____ °F Upset: _____ F
9. Vessel Rating: MAWP: _____ psig MDMT: _____ °F Installed Position: Horiz. Vert.

10. Design Movements: Axial Compression: (−) _____ in. Axial Extension: (+) _____ in. Lateral: _____ in. Angular: _____ deg
11. Specified Number of Cycles: _____ cycles

12. Shell Material: _____ Bellows Material: _____
13. Shell Thickness: _____ inches Shell Corrosion Allowance: Internal: _____ inches External: _____ inches
14. Shell Radiography: None / Spot / Full
15. End Preparation: Square Cut Outside Bevel Inside Bevel Double Bevel (Describe in Line 23 if special)
16. Heat Exchanger Tube Length Between Inner Tubesheet Faces: _____ in.

17. Maximum Bellows Spring Rate: N Y - _____ lb. / in.
18. Internal Liner: N Y - Material: _____
19. Drain Holes in Liner: N Y - Quantity/Size : _____
20. Liner Flush With Shell I.D.: N Y - Telescoping Liners? N Y
21. External Cover: N Y - Material: _____
22. Pre-production Approvals Required: N Y - Drawings / Bellows Calculations / Weld Procedures
23. Additional Requirements (i.e. bellows preset, ultrasonic inspection...):

U-2 Partial data report required per Appendix 26 para. 26–13. Temporary shipping bars are required to maintain assembly length during shipment and vessel fabrication only, and ARE NOT to be used during vessel hydrotest for expansion joint pressure restraint [see para. 26–4.1 (c) and (d)].

A05

FORM 26-1M SPECIFICATION SHEET FOR ASME SECTION VIII, DIVISION 1 APPENDIX 26 BELLOWS EXPANSION JOINTS

Date: _____ / _____ / _____ Applicable ASME Code Edition: _____

1. Item Number: _____ Vessel Manufacturer: _____
2. Drawing/Tag/Serial/Job Number: _____ Vessel Owner: _____
3. Quantity: _____ Installation Location: _____
4. Size: _____ O.D. _____ I.D. mm Expansion Joint Overall Length: _____ mm

5. Internal Pressure: Design: _____ MPa
6. External Pressure: Design: _____ MPa
7. Vessel Manufacturer Hydrotest Pressure: Internal: _____ MPa External: _____ MPa

8. Temperature: Design: _____ °C Operating: _____ °C Upset: _____ °C
9. Vessel Rating: MAWP: _____ MPa MDMT: _____ °C Installed Position: Horiz. Vert.

10. Design Movements: Axial Compression: (−) _____ mm Axial Extension: (+) _____ mm Lateral: _____ mm Angular: _____ deg
11. Specified Number of Cycles _____ cycles

12. Shell Material: _____ Bellows Material: _____
13. Shell Thickness: _____ mm Shell Corrosion Allowance: Internal: _____ mm External: _____ mm
14. Shell Radiography: None / Spot / Full
15. End Preparation: Square Cut Outside Bevel Inside Bevel Double Bevel (Describe in Line 23 if special)
16. Heat Exchanger Tube Length Between Inner Tubesheet Faces: _____ mm

17. Maximum Bellows Spring Rate: N Y - _____ N/ mm
18. Internal Liner: N Y - Material: _____
19. Drain Holes in Liner: N Y - Quantity/Size : _____
20. Liner Flush With Shell I.D.: N Y - Telescoping Liners? N Y
21. External Cover: N Y - Materials: _____
22. Pre-production Approvals Required: N Y - Drawings / Bellows Calculations / Weld Procedures
23. Additional Requirements (i.e. bellows preset, ultrasonic inspection...):

U-2 Partial data report required per Appendix 26 para. 26–13. Temporary shipping bars are required to maintain assembly length during shipment and vessel fabrication only, and ARE NOT to be used during vessel hydrotest for expansion joint pressure restraint [see para. 26–4.1 (c) and (d)].

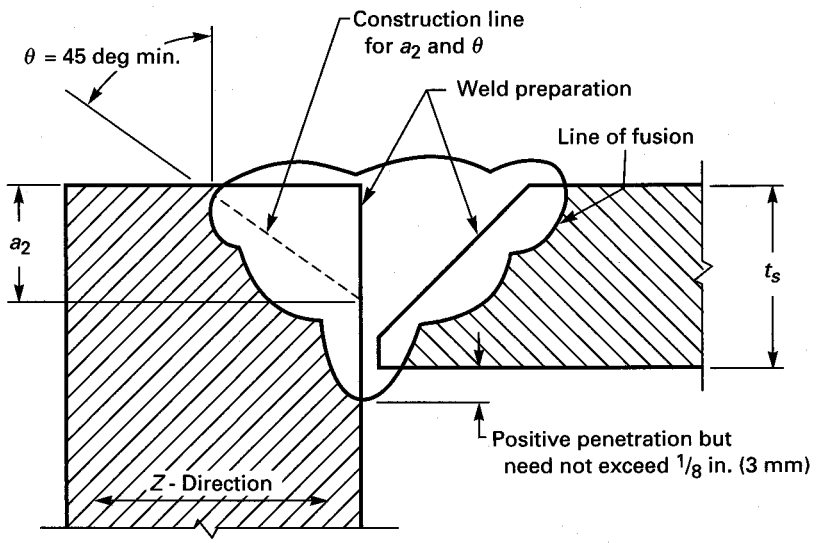

K	a_2 / t_s not less than
0.6	0.29
0.7	0.23
0.8	0.17
0.9	0.09
1.0	0

(a) Details for One Member Beveled

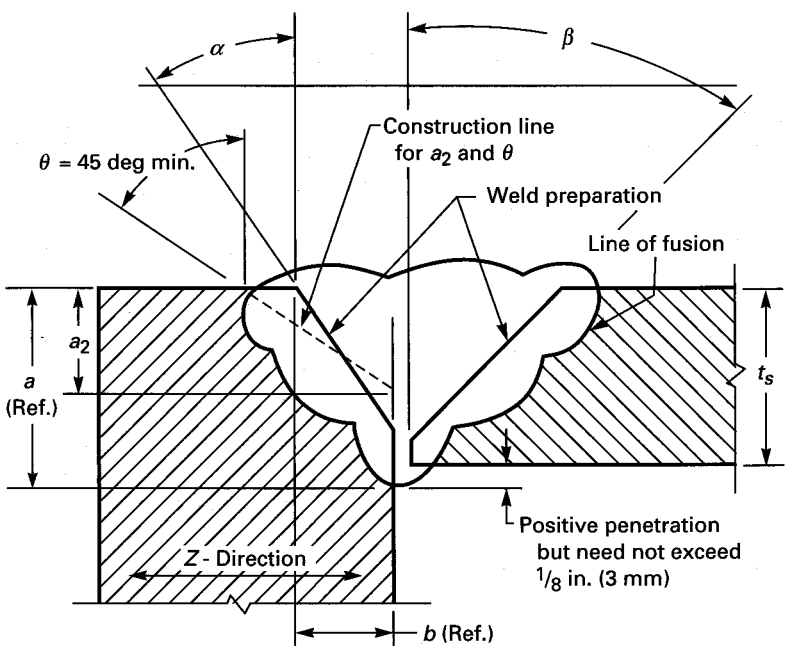

K	Min. a_2 / t_s for X not less than 15 deg	Min. a_2 / t_s for X not less than 30 deg	Min. a_2 / t_s for X not less than 45 deg
0.6	0.85	0.55	0.29
0.7	0.81	0.47	0.23
0.8	0.74	0.38	0.17
0.9	0.58	0.23	0.09
1.0	0	0	0

See sketch (a) above for table with values of K and a_2 / t_s

(b) Details for Both Members Beveled

GENERAL NOTE: Interpolation for x and k is permitted.

FIG. 28-1 **A05**

reduction in area, shall be reported on the Material Test Report, in addition to the information required by Specification SA-20 when the testing in accordance with Specification SA-770 is performed by the material manufacturer. If the testing is performed by the vessel Manufacturer, the test result shall be reported on the Manufacturer's Data Report. See UG-93(b) and UG-93(c).

28-2(e) The maximum value of t_s (see Fig. 28-1) shall be limited to 3 in. (75 mm).

28-2(f) Both members may be beveled as shown in Fig. 28-1 sketch (b). When the bevel angle (α) is large enough to satisfy the UW-13(e)(4) requirements, the alternative rules of this Appendix do not apply. When the bevel angle (α) results in weld fusion dimensions that do not satisfy the UW-13(e)(4) requirement that $a + b$ is not less than $2t_s$, the following shall be satisfied.

28-2(f)(1) The angle (α) shall be equal to or greater than 15 deg.

28-2(f)(2) The dimension a_2 shall be measured from the projected surface of the plate being attached as shown in Fig. 28-1 sketch (b).

28-2(f)(3) The angle (β) shall be equal to or greater than 15 deg.

28-2(f)(4) When a_2/t_s is equal to or exceeds the value corresponding to the K shown in the table in Fig. 28-1(b), the requirements in 28-2(a) and (b) need not be satisfied. When a_2/t_s is less than this value, all other requirements of this Appendix shall be satisfied. A05

28-2(g) When all the requirements of this Division and the supplemental requirements of this Appendix have been met, the following notation shall be entered in the Manufacturer's Data Report under Remarks, "Constructed in conformance with Appendix 28."

04

MANDATORY APPENDIX 29
DELETED

TABLE 31-2
COMPOSITION REQUIREMENTS FOR 2¼Cr–1Mo–¼V WELD METAL

Welding Process	C	Mn	Si	Cr	Mo	P	S	V	Cb
SAW	0.05–0.15	0.50–1.30	0.05–0.35	2.00–2.60	0.90–1.20	0.015 max.	0.015 max.	0.20–0.40	0.010–0.040
SMAW	0.05–0.15	0.50–1.30	0.20–0.50	2.00–2.60	0.90–1.20	0.015 max.	0.015 max.	0.20–0.40	0.010–0.040
GTAW	0.05–0.15	0.30–1.10	0.05–0.35	2.00–2.60	0.90–1.20	0.015 max.	0.015 max.	0.20–0.40	0.010–0.040
GMAW	0.05–0.15	0.30–1.10	0.20–0.50	2.00–2.60	0.90–1.20	0.015 max.	0.015 max.	0.20–0.40	0.010–0.040

31-4(b) Weld metal from each heat or lot of electrodes and filler-wire–flux combination shall be tested. The minimum and maximum tensile properties shall be met in PWHT Conditions A and B. The minimum CVN impact properties shall be met in PWHT Condition B. Testing shall be in general conformance with SFA-5.5 for covered electrodes and SFA-5.23 for filler-wire–flux combinations.

31-4(c) Duplicate testing in the PWHT Condition A and PWHT Condition B (see 31-3) is required. The minimum tensiles and CVN impact properties for the base material shall be met. CVN impact testing is only required for Condition B.

For 2¼Cr–1Mo–¼V material, the weld metal shall meet the composition requirements listed in Table 31-2. For all other materials, the minimum carbon content of the weld metal shall be 0.05%.

31-5 TOUGHNESS REQUIREMENTS

The minimum toughness requirements for base metal, weld metal, and heat affected zone, after exposure to the simulated postweld heat treatment Condition B, shall be as follows:

Number of Specimens	Impact Energy, ft-lb
Average of 3	40
Only one in set	35 min.

GENERAL NOTE: Full size Charpy V-notch, transverse, tested at the MDMT.

If the material specification or other parts of this Division have more demanding toughness requirements, they shall be met.

MANDATORY APPENDIX 32
LOCAL THIN AREAS IN CYLINDRICAL SHELLS AND IN SPHERICAL SEGMENTS OF SHELLS

32-1 SCOPE

The rules of this Appendix permit acceptable Local Thin Areas (LTAs) in cylindrical shells or spherical segments of shells (such as spherical vessel, hemispherical heads, and the spherical portion of torispherical and ellipsoidal heads) under internal pressure be less than the required thickness required by UG-16, UG-27, or UG-32 as applicable. Local thin areas on the inside or outside of cylindrical shells or spherical segments of shells designed for internal pressure are acceptable, provided they meet the requirements in this Appendix.

32-2 GENERAL REQUIREMENTS

04 *32-2(a)* The Manufacturer shall maintain records of the calculations and the location and extent of all LTAs that are evaluated using this Appendix, and provide such information to the purchaser or the User or the User's designated agent if requested. This information shall be documented in the design calculations made to meet the requirements of this Appendix.

A05 *32-2(b)* The maximum design temperature shall not exceed the maximum temperature limits specified in Table 1-4.3.

32-2(c) This Appendix shall not be applied to Part UF Vessels.

32-2(d) The provisions of this Appendix do not apply to corrosion-resistant linings or overlays.

A05 *32-2(e)* All other applicable requirements of this Division shall be met.

32-3 NOMENCLATURE

C = projected circumferential length of LTA in a cylindrical shell, in.

D = per UG-32

D_L = maximum dimension of LTA in a spherical segment, in.

L = projected axial length of LTA in a cylindrical shell, in.

LTA = local thin area

R = inside radius for cylindrical shell or spherical segment, for ellipsoidal heads $R = K_o D$ where K_o is from Table UG-33.1, in.

t = required thickness per UG-27(c), UG-27(d), UG-32(d), UG-32(e), or UG-32(f), as applicable, but not less than thickness requirements of UG-16, in.

t_L = minimum thickness of LTA, in.

θ = see Fig. 32-3

32-4 SINGLE LOCAL THIN AREAS IN CYLINDRICAL SHELLS

32-4(a) Single LTA shall satisfy the following equations:

$$\frac{t_L}{t} \geq 0.9 \quad (1)$$

$$L \leq \sqrt{Rt} \quad (2)$$

$$C \leq 2L \quad (3)$$

$$t - t_L \leq {}^3/_{16} \text{ in.} \quad (4)$$

32-4(b) Any edge of an LTA shall not be closer than $2.5\sqrt{Rt}$ from a structural discontinuity such as a head or stiffener.

32-4(c) For openings meeting UG-36(c)(3), the minimum axial distance between the edge of the LTA and the center of the opening shall be equal to or greater than the inside diameter of the opening plus $\sqrt{Rt}$

32-4(d) For openings not meeting UG-36(c)(3), the minimum axial distance between the edge of the LTA and the reinforment limit of the opening shall be equal to or greater than $\sqrt{Rt}$

32-4(e) The blend between the LTA and the thicker surface shall be with a taper length not less than three times the LTA depth as shown in Fig. 32-3, sketch (b). The minimum bottom blend radius shall be equal to or greater than two times the LTA depth as shown in Fig. 32-3, sketch (b). 04

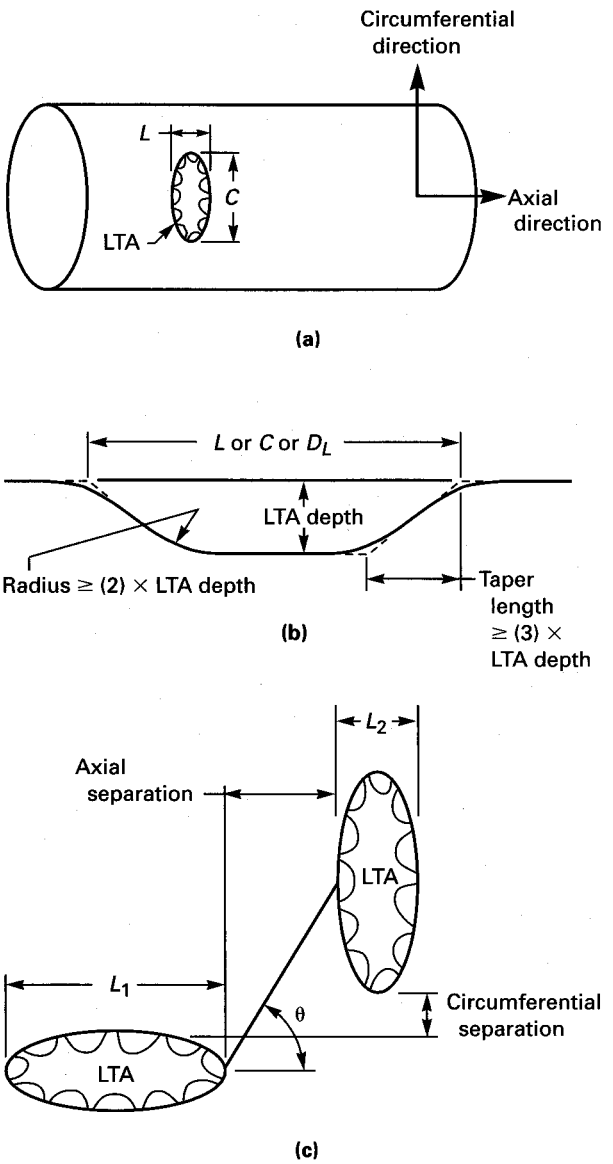

A05 FIG. 32-3 NOMENCLATURE

32-4(f) The longitudinal stresses on the LTA from mechanical loads other than internal pressure shall not exceed 0.3*S*.

32-4(g) The thickness at the LTA shall meet the requirements of UG-23(b) and/or UG-28 as applicable.

32-5 MULTIPLE LOCAL THIN AREAS IN CYLINDRICAL SHELLS

32-5(a) A pair of local areas with finished axial length, L_1 and L_2 [see Fig. 32-3, sketch (c)] are acceptable if the individual LTA satisfies the requirements of 32-4 above and one of the following conditions [(a)(1) or (a)(2)] is met.

32-5(a)(1) When $\theta \leq 45$ deg, the minimum axial separation [see Fig. 32-3, sketch (c)] shall be the greater of:

$$\frac{(1.0 + 1.5 \cos \theta)(L_1 + L_2)}{2} \text{ or } 2t$$

32-5(a)(2) When $\theta > 45$ deg, both of the following shall be met:

32-5(a)(2)(a) The miniumum axial separation shall be equal to or greater than:

$$\frac{2.91 \cos \theta\,(L_1 + L_2)}{2}$$

32-5(a)(2)(b) The minimum circumferential separation shall be equal to or greater than $2t$.

32-5(b) Multiple pairs of LTA are acceptable provided all pairs meet the rules of a single pair specified in 32-5(a).

32-5(c) Multiple local thin areas may be combined as a single LTA. The resultant single LTA is acceptable if it satisfies the rules of 32-4.

32-6 SINGLE LOCAL THIN AREAS IN SPHERICAL SEGMENTS OF SHELLS 04

32-6(a) The single LTA shall satisfy the following equations:

$$\frac{t_L}{t} \geq 0.9 \quad (5)$$

$$D_L \leq \sqrt{Rt} \quad (6)$$

$$t - t_L \leq {}^3/_{16} \text{ in.} \quad (7)$$

32-6(b) For openings meeting UG-36(c)(3), the minimum distance between the edge of the LTA and the center of the opening shall be equal to or greater than the inside diameter of the opening plus $\sqrt{Rt}$.

32-6(c) For openings not meeting UG-36(c)(3), the miniumum distance between the edge of the LTA and the reinforcement limit of the opening shall be equal to or greater than $\sqrt{Rt}$.

32-6(d) The edges of a LTA shall not be closer than $2.5\sqrt{Rt}$ from a structural discontinuity.

32-6(e) A constant thickness junction between head and cylindrical shell is not considered to be a structural discontinuity for LTA rules.

32-6(f) The blend between the LTA and the thicker surface shall be with a taper length not less than three times the LTA depth. The minimum bottom blend radius shall be equal to or greater than two times the LTA depth.

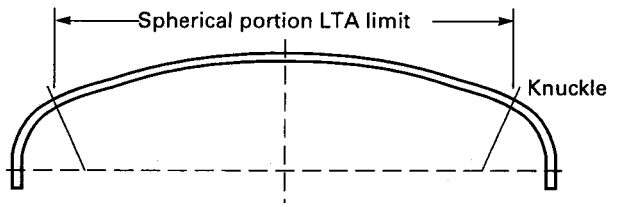

FIG. 32-6.1 LIMITS FOR TORISPHERICAL HEAD

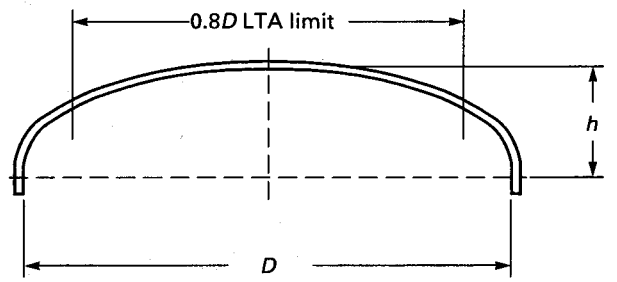

FIG. 32-6.2 LIMITS FOR ELLIPSOIDAL HEAD

The blend requirements are shown in Fig. 32-3, sketch (b).

32-6(g) The LTA for a torispherical head must lie entirely within the spherical portion of the head. See Fig. 32-6.1.

32-6(h) The LTA for an ellipsoidal head must lie entirely within a circle, the center of which coincides with the axis of the vessel and the diameter of which is equal to 80% of the shell inside diameter. See Fig. 32-6.2.

32-6(i) The LTA for a hemispherical head is acceptable within any portion of the head except as limited by 32-6(d). See Fig. 32-6.3.

32-6(j) The thickness at the LTA shall meet the requirements of UG-28(d) or UG-33 as applicable.

32-6(k) The provisions of this Appendix do not apply to the torus portion of either a torispherical or ellipsoidal head, to flat heads, or to conical heads.

32-7 MULTIPLE LOCAL THIN AREAS IN SPHERICAL SEGMENTS OF SHELLS

32-7(a) Multiple LTAs may be combined and evaluated as a single LTA. The encompassed areas of the combined LTAs shall be within the D_L dimension.

32-7(b) Each LTA in the encompassed area shall meet the rules of 32-6.

32-7(c) Multiple LTAs may be treated as single LTAs provided their edges are no closer than $2.5\sqrt{Rt}$.

32-8 DATA REPORTS

When all the requirements of this Division and supplemental requirements of this Appendix have been met, the following notation shall be entered on the Manufacturer's Data Report under Remarks, "Constructed in Conformance With Appendix 32, Local Thin Areas in Cylindrical Shells and in Spherical Segments of Shells."

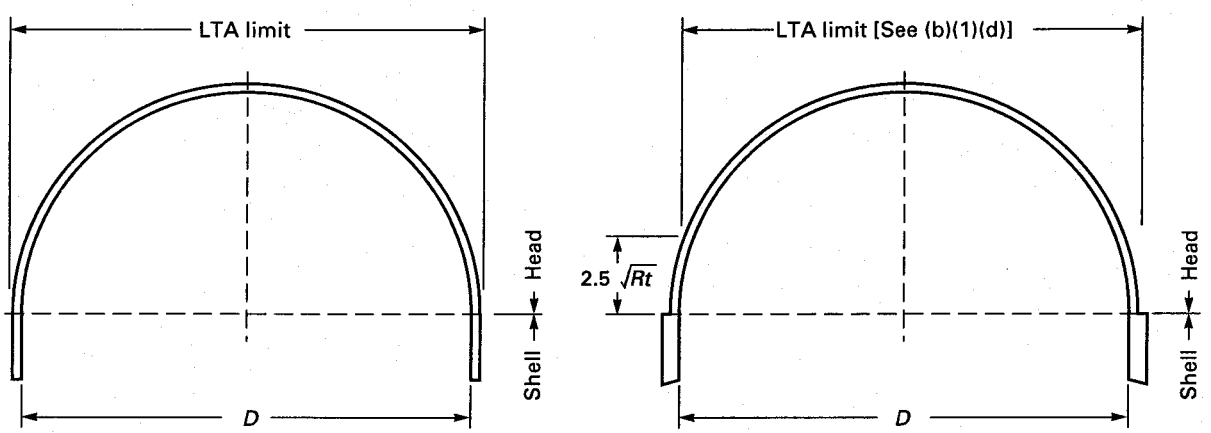

(a) Constant Thickness Junction

(b) Non-Constant Thickness Junction

FIG. 32-6.3 LIMITS FOR HEMISPHERICAL HEAD

MANDATORY APPENDIX 33
STANDARD UNITS FOR USE IN EQUATIONS

04

TABLE 33-1
STANDARD UNITS FOR USE IN EQUATIONS

Quantity	U.S. Customary Units	SI Units
Linear dimensions (e.g., length, height, thickness, radius, diameter)	inches (in.)	millimeters (mm)
Area	square inches ($in.^2$)	square millimeters (mm^2)
Volume	cubic inches ($in.^3$)	cubic millimeters (mm^3)
Section modulus	cubic inches ($in.^3$)	cubic millimeters (mm^3)
Moment of inertia of section	$inches^4$ ($in.^4$)	$millimeters^4$ (mm^4)
Mass (weight)	pounds mass (lbm)	kilograms (kg)
Force (load)	pounds force (lbf)	newtons (N)
Bending moment	inch-pounds (in.-lb)	newton-millimeters (N·mm)
Pressure, stress, stress intensity, and modulus of elasticity	pounds per square inch (psi)	megapascals (MPa)
Energy (e.g., Charpy impact values)	foot-pounds (ft-lb)	joules (J)
Temperature	degrees Fahrenheit (°F)	degrees Celsius (°C)
Absolute temperature	Rankine (R)	kelvin (K)
Fracture toughness	ksi square root inches (ksi$\sqrt{in.}$)	MPa square root meters (MPa$\sqrt{m}$)
Angle	degrees or radians	degrees or radians
Boiler capacity	Btu/hr	watts (W)

NONMANDATORY APPENDICES

NONMANDATORY APPENDIX A
BASIS FOR ESTABLISHING ALLOWABLE LOADS FOR TUBE-TO-TUBESHEET JOINTS

A-1 GENERAL

04 *A-1(a)* This Appendix provides a basis for establishing allowable tube-to-tubesheet joint loads, except for the following welds.

A05 *A-1(a)(1)* Full-strength welds defined in accordance with UW-20.2(a) shall be designed in accordance with UW-20.4 and do not require shear load testing.

A05 *A-1(a)(2)* Partial-strength welds defined in accordance with UW-20.2(b) shall be designed in accordance with UW-18(d) or UW-20.5 and do not require shear load testing.

The rules of this Appendix may be used to establish the allowable loads for welded tube-to-tubesheet joints where it is preferred to use welds smaller than those required by UW-20.

The rules of this Appendix are not intended to apply to U-tube construction.

A-1(b) Tubes used in the construction of heat exchangers or similar apparatus may be considered to act as stays which support or contribute to the strength of the tubesheets in which they are engaged. Tube-to-tubesheet joints shall be capable of transferring the applied tube loads. The design of tube-to-tubesheet joints depends on the type of joint, degree of examination, and shear load tests, if performed. Some acceptable geometries and combinations of brazed, welded, and mechanical joints are described in Table A-2. Some acceptable types of welded joints are illustrated in Fig. A-2.

A-1(b)(1) Geometries, including variations in tube pitch, fastening methods, and combinations of fastening methods, not described or shown, may be used provided qualification tests have been conducted and applied in compliance with the procedures set forth in A-3 and A-4.

A-1(b)(2) Materials for welded or brazed tube-to-tube-sheet joints which do not meet the requirements of UW-5 or UB-5, but in all other respects meet the requirements of Section VIII, Division 1, may be used providing qualification tests of the tube-to-tubesheet joint have been conducted and applied in compliance with the procedures set forth in A-3 and A-4.

A-1(c) Some combinations of tube and tubesheet materials, when welded, result in welded joints having lower ductility than required in the material specifications. Appropriate tube-to-tubesheet joint geometry, welding method, and/or heat treatment shall be used with these materials to minimize this effect.

A-1(d) In the selection of joint type, consideration shall be given to the mean metal temperature of the joint at operating temperatures (see 3-2) and differential thermal expansion of the tube and tubesheet which may effect the joint integrity. The following provisions apply for establishing maximum operating temperature for tube-to-tubesheet joints.

A-1(d)(1) Tube-to-tubesheet joints made by welding shall be limited to the maximum temperature for which there are allowable stresses for the tube or tubesheet material in Tables 1A or 1B of Section II, Part D.

A-1(d)(2) Tube-to-tubesheet joints made by brazing shall be limited to temperatures in conformance with the requirements of Part UB.

A-1(d)(3) Tube-to-tubesheet joints that depend on friction between the tube and the tube hole such as Joint Types i, j, and k as listed in Table A-2, shall be limited to temperatures as determined by the following.

(a) The maximum temperature for which the allowable stress of neither the tube nor the tubesheet

TABLE A-2
EFFICIENCIES f_r

04
A05

Type Joint	Description (1)	Notes	f_r (test) (2)	f_r (no test)
a	Welded only, $a \geq 1.4t$	(3)	1.00	0.80
b	Welded only, $t \leq a < 1.4t$	(3)	0.70	0.55
b-1	Welded only, $a < t$	(4)	0.70	. . .
c	Brazed, examined	(5)	1.00	0.80
d	Brazed, not fully examined	(6)	0.50	0.40
e	Welded, $a \geq 1.4t$, and expanded	(3)	1.00	0.80
f	Welded, $a < 1.4t$, and expanded, enhanced with two or more grooves	(3)(7)(8)(9)	0.95	0.75
g	Welded, $a < 1.4t$, and expanded, enhanced with single groove	(3)(7)(8)(9)	0.85	0.65
h	Welded, $a < 1.4t$, and expanded, not enhanced	(3)(7)(8)	0.70	0.50
i	Expanded, enhanced with two or more grooves	(7)(8)(9)	0.90	0.70
j	Expanded, enhanced with single groove	(7)(8)(9)	0.80	0.65
k	Expanded, not enhanced	(7)(8)	0.60	0.50

GENERAL NOTE: The joint efficiencies listed in this table apply only to allowable loads and do not indicate the degree of joint leak tightness.

NOTES:

(1) For joint types involving more than one fastening method, the sequence used in the joint description does not necessarily indicate the order in which the operations are performed.

(2) The use of the f_r(test) factor requires qualification in accordance with A-3 and A-4.

(3) The value of f_r(no test) applies only to material combinations as provided for under Section IX. For material combinations not provided for under Section IX, f_r shall be determined by test in accordance with A-3 and A-4.

(4) For f_r(no test), refer to UW-20.2(b).

(5) A value of 1.00 for f_r(test) or 0.80 for f_r(no test) can be applied only to joints in which visual examination assures that the brazing filler metal has penetrated the entire joint [see UB-14(a)] and the depth of penetration is not less than three times the nominal thickness of the tube wall.

(6) A value of 0.50 for f_r(test) or 0.40 for f_r(no test) shall be used for joints in which visual examination will not provide proof that the brazing filler metal has penetrated the entire joint [see UB-14(b)].

(7) When $d_o/(d_o - 2t)$ is less than 1.05 or greater than 1.410, f_r shall be determined by test in accordance with A-3 and A-4.

(8) When the nominal pitch (center-to-center distance of adjacent tube holes) is less than $d_o + 2t$, f_r shall be determined by test in accordance with A-3 and A-4.

(9) The Manufacturer may use other means to enhance the strength of expanded joints, provided however, that the joints are tested in accordance with A-3 and A-4.

material is obtained from time-dependent properties as provided in Tables 1A or 1B of Section II, Part D.

(b) The maximum operating temperature is based on the interface pressure that exists between the tube and tubesheet. The maximum operating temperature is limited such that the interface pressure due to expanding the tube at joint fabrication plus the interface pressure due to differential thermal expansion does not exceed 58% of the smaller of the tube or tubesheet yield strength listed in Table Y-2 of Section II, Part D at the operating temperature. When the tube or tubesheet yield strength is not listed in Table Y-2, the operating temperature limit shall be determined as described in (d)(3)(d) below. The interface pressure due to expanding the tube at fabrication or the interface pressure due to differential thermal expansion may be determined analytically or experimentally.

(c) Due to differential thermal expansion, the tube may expand less than the tubesheet. For this condition, the interfacial pressure P_T as defined in A-2 is a negative number.

(d) When the maximum temperature is not determined by (d)(3)(b) above, or the tube expands less than or equal to the tubesheet, joint acceptability shall be determined by shear load tests described in A-3. Two sets of specimens shall be tested. The first set shall be tested at the proposed operating temperature. The second set shall be tested at room temperature after heat soaking at the proposed operating temperature for 24 hr. The proposed operating temperature is acceptable if the provisions of A-5 are met.

A-1(e) The Manufacturer shall prepare written procedures for joints which are expanded (whether welded

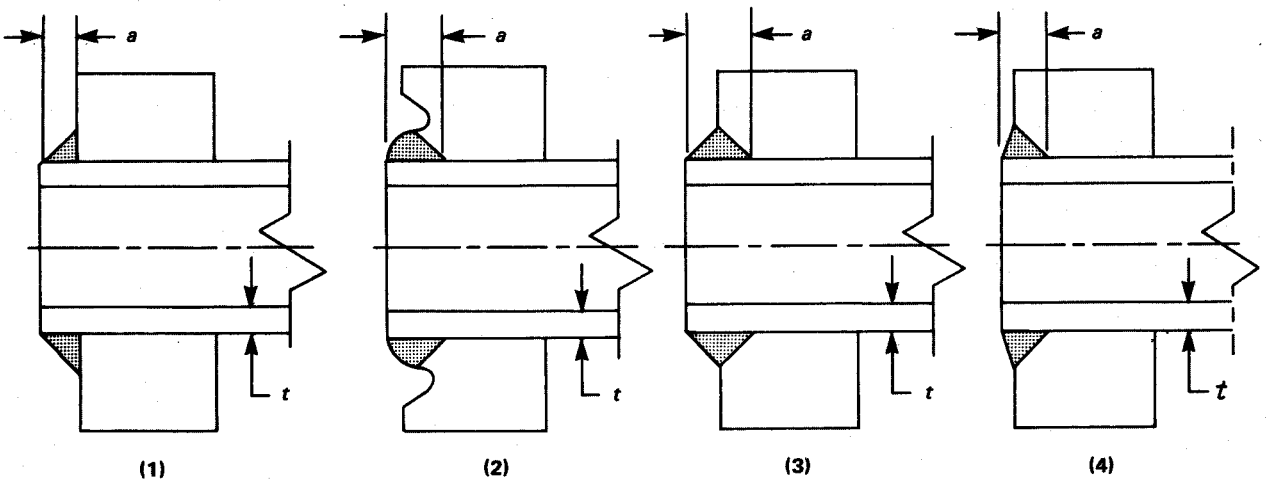

Some acceptable weld geometries where a is not less than $1.4t$.

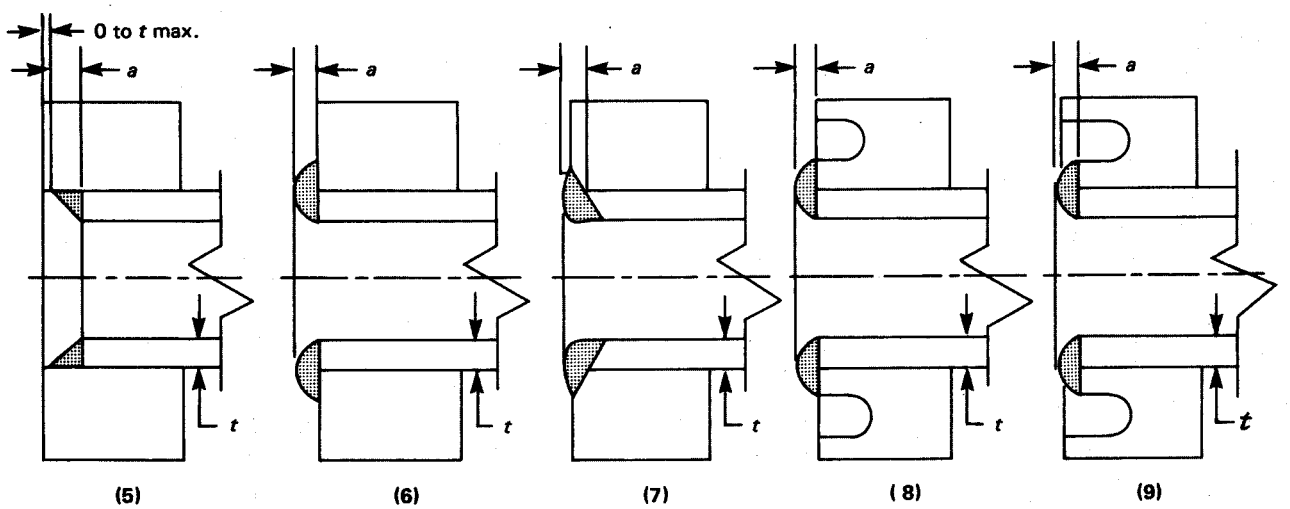

Some acceptable weld geometries where a is less than $1.4t$.

FIG. A-2 SOME ACCEPTABLE TYPES OF TUBE-TO-TUBESHEET WELDS

and expanded or expanded only) for joint strength. The Manufacturer shall establish the variables that affect joint repeatability in these procedures. The procedures shall provide detailed descriptions or sketches of enhancements, such as grooves, serrations, threads, and coarse machining profiles. The Manufacturer shall make these written procedures available to the Authorized Inspector.

A-2 MAXIMUM AXIAL LOADINGS

In the design of shell and tube heat exchangers of other than U-tube construction, the maximum allowable axial load[1] in either direction on tube-to-tubesheet joints shall be determined in accordance with the following:

For joint types a, b, b-1, c, d, e,

$$L_{\max} = A_t S_a f_r \quad (1)$$

For joint types f, g, h,

$$L_{\max} = A_t S_a f_e f_r f_y \quad (2)$$

[1] The loads determined by Eqs. (1), (2) and (3) apply to the tube-to-tubesheet joint only. Rules for determining allowable axial loads on stays in tension are given in Subsection A, UG-47, braced and stayed surfaces. (Appropriate paragraphs in Subsection A are to be supplemented as required.)

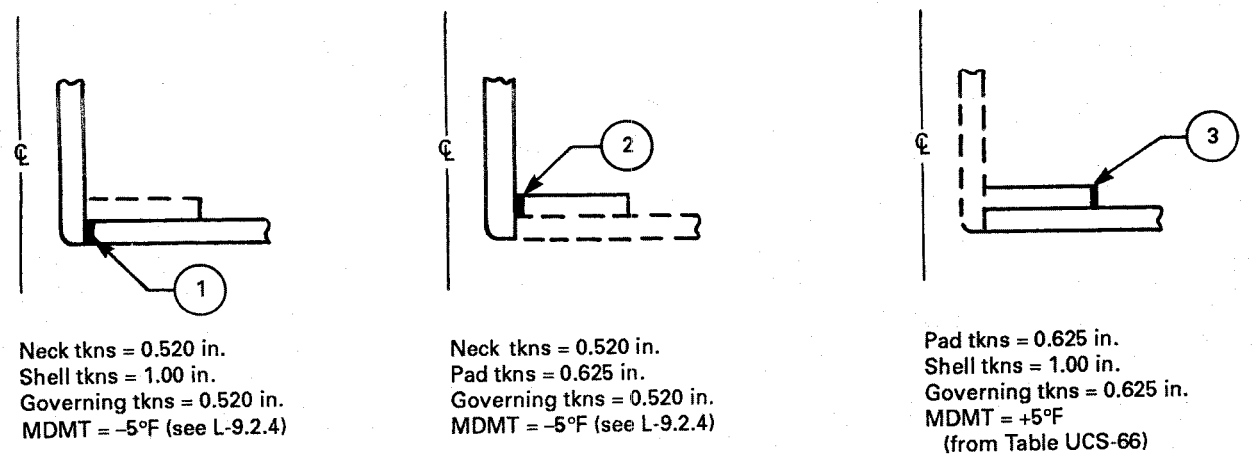

Neck tkns = 0.520 in.
Shell tkns = 1.00 in.
Governing tkns = 0.520 in.
MDMT = –5°F (see L-9.2.4)

Neck tkns = 0.520 in.
Pad tkns = 0.625 in.
Governing tkns = 0.520 in.
MDMT = –5°F (see L-9.2.4)

Pad tkns = 0.625 in.
Shell tkns = 1.00 in.
Governing tkns = 0.625 in.
MDMT = +5°F
(from Table UCS-66)

FIG. L-9.3.1

Steps 3–5, Subjoint ③. To determine the adjusted MDMT of subjoint ③, the maximum general primary membrane tensile stress in the reinforcing pad may be conservatively assumed to be the same as that in the shell after the corrosion allowance is deducted, thereby permitting the same 29°F adjustment (See Step 4 in L-9.2.1) in the full-stress MDMT of + 5°F. Therefore, the adjusted MDMT of subjoint ③ is 5 – 29 or –24°F. This is colder than the MDMT determined in L-9.2.1 for the butt joints in the shell, and therefore will not limit the MDMT that may be stamped on the vessel nameplate.

L-9.3.2 Saddle Band-to-Shell Weld

Step 1

	Allowable Stress, ksi	
	At MDMT	At 700°F
Saddle band material: SA-516 70	20.0	18.1
Shell material: SA-516 70	20.0	18.1

Joint efficiency: NA

This band is judged by the designer to be essential to the structural integrity of the vessel [see UCS-66(a)].

Governing thickness = 1 in.

Steps 2–5. The governing thickness and the associated 31°F unadjusted MDMT for this joint are the same as that determined in L-9.2.1 for the Category A butt joints in the shell. The adjusted MDMT for this joint is likewise 2°F since the maximum general primary membrane tensile stress in the saddle band may be conservatively assumed to be the same as that in the shell after the corrosion allowance is deducted.

L-9.3.3 Insulation Ring-to-Shell Corner Joint. The insulation ring attachment is judged by the designer to not be essential to the structural integrity of the vessel, and therefore this joint need not be evaluated for the vessel MDMT determination. [See UCS-66(a).]

L-9.4 Governing Thickness for Nonwelded Parts

[See definition of governing thickness, UCS-66(a)(3).]

L-9.4.1 Flat Head

Step 1

	Allowable Stress, ksi	
	At MDMT	At 700°F
Flat head material: SA-266 Class 2	20.0	17.2

Figure UCS-66 material classification: Curve B

Joint efficiency: NA

Flat Head Rating per UG-34: 685 psig at MDMT

With reference to UCS-66(a)(3), it is noted that, in this example, the governing thickness of the nonwelded flat head is the flat component thickness divided by 4, see Fig. UCS-66.3 sketch (c), t_{g1} = 6.06/4 = 1.52 in.

Step 2. From Table UCS-66 the MDMT for t_{g1} = 1.52 in. is 52°F. If the forging was purchased to fine grain practice and normalized, the Fig. UCS-66 material classification would change to Curve C, per General Note (c)(2), and the MDMT for this component would become 15°F.

Step 3–5. The adjustment to MDMT may be made for flat components using UCS-66(b)(1)(b).

$$\text{Ratio} = 400/685 = 0.58$$

Per Fig. UCS-66.1, temperature reduction is 42°F.

$$\text{Adjusted MDMT} = 52 - 42 = 10°\text{F}$$

If the forging is produced to fine grain practice and normalized the adjusted MDMT = 15 – 42 = –27°F.

L-9.4.2 Bolts and Nuts

Bolt material: SA-193 B7

Nut material: SA-194 2H

Per General Note (e) to Fig. UCS-66, the MDMT of the bolting without impact testing is –55°F, and the MDMT

of nonimpact tested nuts is −55°F. Therefore these components will not govern the MDMT of the vessel.

L-9.5 Summary of Results and Commentary

L-9.5.1 This example illustrates the use of the rules in UCS-66 for determining the coldest MDMT of a steel vessel without impact testing. A review of the evaluation results reveals that the warmest value for all governing thicknesses is 10°F, and therefore this is the coldest MDMT that may be stamped on the Code nameplate for the design as specified in the example. At this point a decision should be made whether or not a MDMT of 10°F is acceptable for the service conditions, see UG-20(b). Let us assume that the flat head forging was produced to the fine grain practice and normalized; the adjusted MDMT for the head would become −27°F, and the Code stamped MDMT would then become 2°F limited jointly by the 1 in. thick shell sections and the formed head skirt of 0.855 in. minimum specified thickness, both of SA-516 70 (not normalized), Fig. UCS-66 material classification Curve B. The fact that these sections limited the vessel MDMT was expected in light of the following considerations.

(a) A single Fig. UCS-66 curve represented all materials employed other than the bolts, nuts, and ANSI flanges which have a lower MDMT.

(b) The governing thicknesses of these sections are the heaviest, resulting in the MDMT determined from Fig. UCS-66 being the warmest.

(c) These sections are subjected to the highest general primary membrane tensile stress level of all of the vessel components, so that the Fig. UCS-66.1 adjustment to the Fig. UCS-66 MDMT will be the least.

Such observations will significantly reduce the time required to determine the adjusted MDMT of a vessel.

L-9.5.2 An MDMT colder than illustrated would be possible by utilizing various provisions of additional rules in this Division which include the following:

(a) use of normalized SA-516 70 plate for the shell, formed head, reinforcing pad and saddle band so that the Fig. UCS-66 material classification for these components would change from Curve B to Curve D (see General Notes to Fig. UCS-66);

(b) PWHT of the vessel after all welding fabrication has been completed [see UCS-68(c)]. Since all welded components are P-No. 1 materials, this would reduce the unadjusted MDMT's by 30°F, so that the unadjusted MDMT for the 1 in. thick shell section would, for example, be reduced from 31°F to 1°F. This, in turn, would reduce the adjusted MDMT of this component from 2°F to −28°F.

(c) selective use of impact tested materials [see UCS-66(g)];

(d) judiciously selected combinations of the above.

L-9.6 Coldest Metal Temperature During UG-99 or UG-100 Pressure Test

L-9.6.1 Assuming the pressure test will be based on the 400 psi MAWP [versus a calculated test pressure per UG-99(c)], the following statements can be made regarding the metal temperature during the pressure test:

(a) Hydrostatic Test. The coldest *recommended* metal temperature during hydrostatic test: 2 + 30 = 32°F. [See L-9.2.1, Step 5 and UG-99(h).]

(b) Pneumatic Test. The coldest metal temperature *permitted* during pneumatic test: 2 + 30 = 32°F. [See L-9.2.1, Step 5 and UG-100(c).]

L-9.6.2 Assuming the test pressure will be calculated under the provisions of UG-99(c), and further assuming that the basis for the calculated test pressure is the uncorroded nominal shell thickness of 1 in. so that $t_r = t_n - c$, the Step 3 Ratio (see Fig. UCS-66.2) would become 0.85, resulting in a reduction in the full-stress MDMT of 15°F and an adjusted MDMT of 31 − 15, or 16°F. Therefore the following statements can be made regarding the metal temperature during the pressure test [see General Note (6), Fig. UCS-66.2]:

(a) Hydrostatic Test. The coldest *recommended* metal temperature during hydrostatic test: 16 + 30 = 46°F. [See UG-99(h).]

(b) Pneumatic Test. The coldest metal temperature *permitted* during pneumatic test: 16 + 30 = 46°F. [See UG-100(c).]

L-9.6.3 During operation the vessel is to experience an occasional temperature drop to −10°F with a corresponding pressure drop to 300 psig. The Code stamped MDMT is 2°F at 400 psig. UCS-160(b) is used to determine the adjusted MDMT of the vessel as follows:

$$\text{Ratio} = \frac{300}{400} = 0.75$$

Per Fig. UCS-66.1 temperature reduction is 25°F. Adjusted MDMT = 2 − 25 = −23°F.

It should be noted that pressure loading governs general primary membrane tensile stress as stated in the design data in L-9.1. If other loadings govern, UCS-160(a) shall be used to determine the adjusted MDMT of the vessel.

L-10 TUBE-TO-TUBESHEET WELDS A05

L-10.1 Examples of UW-20 for Full Strength Welds

The following examples provide the procedure required by UW-20.4 to determine the size and allowable axial load of full strength tube-to-tubesheet welds for each of the joint types shown in Fig UW-20.

L-10.1.1 Given. A tube-to-tubesheet joint that shall meet the requirements for a full strength weld.

L-10.1.1(a) The tube-to-tubesheet joint design temperature is 600°F.

L-10.1.1(b) The tube material is titanium SB-338 Grade 3 (R50550) seamless. The tubes are 1.0 in. outside diameter and 0.065 in. thick.

L-10.1.1(c) The tubesheet material is titanium SB-265 Grade 2 (R50400).

L-10.1.2 Data Summary. The data summary consists of those variables from the nomenclature (UW-20.3) that are applicable to full strength welds.

d_o = 1.0 in.
t = 0.065 in.
S_a = 7,400 psi from Table 1B of Section II, Part D at 600°F
S_t = 6,500 psi from Table 1B of Section II, Part D at 600°F
S_w = lesser of S_a or S_t = 6,500 psi
$f_w = S_a/S_w$ = 1.14
f_d = 1.0 for full strength welds

L-10.1.3 Calculation Results for Fillet Welds Shown in Fig. UW-20.1, Sketch (a)

L-10.1.3(a) Determine the fillet weld size a_f as required by UW-20.4(a).

L-10.1.3(a)(1) Calculate the minimum required length a_r of the fillet weld leg using the equation from UW-20.6(a).

a_r = 0.117 in.

L-10.1.3(a)(2) Determine the fillet weld leg a_f in accordance with UW-20.6(a)(1).

$a_f \geq$ = MAX(a_r , t) =MAX(0.117 , 0.065) = 0.117 in.

Choose a_f = 0.117 in.

L-10.1.3(b) Determine the maximum allowable axial load L_{max} as required by UW-20.4(b).

L-10.1.3(b)(1) For pressure induced axial forces, calculate L_{max} in accordance with UW-20.4(b)(1).

$$L_{max} = F_t = 1{,}410 \text{ lb}$$

L-10.1.3(b)(2) For thermally-induced or pressure plus thermally-induced axial forces, use UW-20.4(b)(2). For a fillet weld, the weld throat is $0.707a_f$ = 0.707(0.117) = 0.0827. Since the weld throat is not less than t = 0.065, calculate L_{max} in accordance with UW-20.4(b)(2)(b).

$$L_{max} = 2F_t = 2{,}820 \text{ lb}$$

L-10.1.4 Calculation Results for Groove Welds Shown in Fig. UW-20.1, Sketch (b)

L-10.1.4(a) Determine the groove weld size a_g as required by UW-20.4(a).

L-10.1.4(a)(1) Calculate the minimum required length a_r of the groove weld leg using the equation from UW-20.6(b).

a_r = 0.0772 in.

L-10.1.4(a)(2) Determine the groove weld leg a_g in accordance with UW-20.6(b)(1).

$a_g \geq$ MAX(a_r , t) = MAX(0.0772, 0.065) = 0.0772 in.

Choose a_g = 0.078 in.

L-10.1.4(b) Determine the maximum allowable axial load L_{max} as required by UW-20.4(b).

L-10.1.4(b)(1) For pressure induced axial forces, calculate L_{max} in accordance with UW-20.4(b)(1).

$$L_{max} = F_t = 1{,}410 \text{ lb}$$

L-10.1.4(b)(2) For thermally-induced or pressure plus thermally-induced axial forces, use UW-20.4(b)(2). For a groove weld, the weld throat is a_g = 0.078. Since the weld throat is not less than t = 0.065, calculate L_{max} in accordance with UW-20.4(b)(2)(b).

$$L_{max} = 2F_t = 2{,}820 \text{ lb}$$

L-10.1.5 Calculation Results for Combined Groove and Fillet Welds Shown in Fig. UW-20.1, Sketch (c) Where a_f is Equal to a_g

L-10.1.5(a) Determine the groove weld size a_g and the fillet weld size a_f as required by UW-20.4(a).

L-10.1.5(a)(1) Calculate the minimum required length a_r of the combined weld legs using the equation from UW-20.6(c).

a_r = 0.0957 in.

L-10.1.5(a)(2) Determine the combined weld leg a_c in accordance with UW-20.6(c)(1).

$a_c \geq$ MAX(a_r ,t) = MAX(0.0957, 0.065) = 0.0957 in.

Choose a_c = 0.096 in.

L-10.1.5(a)(3) Calculate a_f and a_g.

$a_f = a_c/2$ = 0.048 in.
$a_g = a_c/2$ = 0.048 in.

L-10.1.5(b) Determine the maximum allowable axial load L_{max} as required by UW-20.4(b).

L-10.1.5(b)(1) For pressure induced axial forces, calculate L_{max} in accordance with UW-20.4(b)(1).

$$L_{max} = F_t = 1{,}410 \text{ lb}$$

L-10.1.5(b)(2) For thermally-induced or pressure plus thermally-induced axial forces, use UW-20.4(b)(2). The fillet weld throat is $0.707a_f$ = 0.707(0.048) = 0.0339 and the groove weld throat is a_g = 0.048. Since the combined weld throat (0.0339+0.048 = 0.0819) is not less than t = 0.065, calculate L_{max} in accordance with UW-20.4(b)(2)(b).

$$L_{max} = 2F_t = 2{,}820 \text{ lb}$$

L-10.1.6 Calculation Results for Combined Groove and Fillet Welds Shown in Fig. UW-20.1, Sketch (d) Where a_f is Not Equal to a_g

L-10.1.6(a) Determine groove weld size a_g and the fillet weld size a_f as required by UW-20.4(a).

L-10.1.6(a)(1) Choose a_g, and then calculate F_g, F_t, and f_f.

$a_g = 0.03$ in.
$F_g = 531$ lb
$F_t = 1410$ lb
$f_f = 0.624$

L-10.1.6(a)(2) Calculate the minimum required length a_r of the fillet weld leg using the equation from UW-20.6(d).

$a_r = 0.0748$

L-10.1.6(a)(3) Determine the combined weld leg a_c in accordance with UW-20.6(d)(1).

$$a_c \geq \text{MAX}[(a_r + a_g), t]$$
$$= \text{MAX}[(0.0748 + 0.03), 0.065)] = 0.105 \text{ in.}$$

Choose $a_c = 0.105$ in.

L-10.1.6(a)(4) Calculate a_f.

$$a_f = a_c - a_g = 0.105 - 0.03 = 0.075 \text{ in.}$$

L-10.1.6(b) Determine the maximum allowable axial load L_{max} as required by UW-20.4(b).

L-10.1.6(b)(1) For pressure induced axial forces, calculate L_{max} in accordance with UW-20.4(b)(1).

$$L_{max} = F_t = 1{,}410 \text{ lb}$$

L-10.1.6(b)(2) For thermally-induced or pressure plus thermally-induced axial forces, use UW-20.4(b)(2). The fillet weld throat is $0.707a_f = 0.707(0.075) = 0.053$ and the groove weld throat is $a_g = 0.03$. Since the combined weld throat (0.053+0.03 = 0.083) is not less than $t = 0.065$, calculate L_{max} in accordance with UW-20.4(b)(2)(b).

$$L_{max} = 2F_t = 2{,}820 \text{ lb}$$

L-10.2 Examples of UW-20 for Partial Strength Welds. The following examples provide the procedure required by UW-20.5 to determine the size and allowable axial load of partial strength tube-to-tubesheet welds for each of the joint types shown in Fig. UW-20.1.

L-10.2.1 Given. A tube-to-tubesheet joint that shall meet the requirements for a partial strength weld.

L-10.2.1(a) The tube-to-tubesheet joint design temperature is 600°F.

L-10.2.1(b) The tube material is titanium SB-338 Grade 3 (R50550) seamless. The tubes are 1.0 in. outside diameter and 0.065 in. thick.

L-10.2.1(c) The tubesheet material is titanium SB-265 Grade 2 (R50400).

L-10.2.2 Data Summary. The data summary consists of those variables from the nomenclature (UW-20.3) that are applicable to full strength welds.

$d_o = 1.0$ in.
$t = 0.065$ in.
$S_a = 7{,}400$ psi from Table 1B of Section II, Part D at 600°F
$S_t = 6{,}500$ psi from Table 1B of Section II, Part D at 600°F
$S_w =$ lesser of S_a or $S_t = 6{,}500$ psi
$f_w = S_a/S_w = 1.14$
$F_d = 800$ lb
$F_t = 1{,}410$ lb
$f_d = F_d/F_t = 0.567$

L-10.2.3 Calculation Results for Fillet Welds Shown in Fig. UW-20.1, Sketch (a)

L-10.2.3(a) Determine the fillet weld size a_f as required by UW-20.5(a).

L-10.2.3(a)(1) Calculate the minimum required length a_r of the fillet weld leg using the equation from UW-20.6(a).

$a_r = 0.0682$ in.

L-10.2.3(a)(2) Determine the fillet weld leg a_f in accordance with UW-20.6(a)(2).

$$a_f \geq a_r = 0.0682 \text{ in.}$$

Choose $a_f = 0.0682$ in.

L-10.2.3(b) Determine the maximum allowable axial load L_{max} as required by UW-20.5(b).

L-10.2.3(b)(1) For pressure induced axial forces, calculate L_{max} in accordance with UW-20.5(b)(1).

$F_f = 801$ lb
$F_g = 0$ lb for no groove weld
$L_{max} = F_f + F_g = 801$ lb

L-10.2.3(b)(2) For thermally-induced or pressure plus thermally-induced axial forces, use UW-20.5(b)(2). For a fillet weld, the weld throat is $0.707a_f = 0.707(0.0682) = 0.0482$. Since the weld throat is less than $t = 0.065$, calculate L_{max} in accordance with UW-20.5(b)(2)(a).

$$L_{max} = F_f + F_g = 801 \text{ lb}$$

L-10.2.4 Calculation Results for Groove Welds Shown in Fig. UW-20.1, Sketch (b)

L-10.2.4(a) Determine the groove weld size a_g as required by UW-20.5(a).

L-10.2.4(a)(1) Calculate the minimum required length a_r of the groove weld leg using the equation from UW-20.6(b).

$a_r = 0.0447$ in.

L-10.2.4(a)(2) Determine the groove weld leg a_g in accordance with UW-20.6(b)(2).

$$a_g \geq a_r = 0.0447 \text{ in.}$$

Choose $a_g = 0.05$ in.

L-10.2.4(b) Determine the maximum allowable axial load L_{max} as required by UW-20.5(b).

L-10.2.4(b)(1) For pressure induced axial forces, calculate L_{max} in accordance with UW-20.5(b)(1).

$F_f = 0$ lb for no fillet weld
$F_g = 896$ lb
$L_{max} = F_f + F_g = 896$ lb

L-10.2.4(b)(2) For thermally-induced or pressure plus thermally-induced axial forces, use UW-20.5(b)(2). For a groove weld, the weld throat is $a_g = 0.05$. Since the weld throat is less than $t = 0.065$, calculate L_{max} in accordance with UW-20.5(b)(2)(a).

$$L_{max} = F_f + F_g = 896 \text{ lb}$$

L-10.2.5 Calculation Results for Combined Groove and Fillet Welds Shown in Fig. UW-20.1, Sketch (c) Where a_f is Equal to a_g

L-10.2.5(a) Determine the groove weld size a_g and the fillet weld size a_f as required by UW-20.5(a).

L-10.2.5(a)(1) Calculate the minimum required length a_r of the combined weld legs using the equation from UW-20.6(c).

$a_r = 0.0549$ in.

L-10.2.5(a)(2) Determine the combined weld leg a_c in accordance with UW-20.6(c)(1).

$$a_c \geq a_r = 0.0549 \text{ in.}$$

Choose $a_c = 0.056$ in.

L-10.2.5(a)(3) Calculate a_f and a_g.

$a_f = a_c/2 = 0.028$ in.
$a_g = a_c/2 = 0.028$ in.

L-10.2.5(b) Determine the maximum allowable axial load L_{max} as required by UW-20.5(b).

L-10.2.5(b)(1) For pressure induced axial forces, calculate L_{max} in accordance with UW-20.5(b)(1).

$F_f = 320$ lb
$F_g = 495$ lb
$L_{max} = F_f + F_g = 815$ lb

L-10.2.5(b)(2) For thermally-induced or pressure plus thermally-induced axial forces, use UW-20.5(b)(2). The fillet weld throat is $0.707a_f = 0.707(0.028) = 0.0198$ and the groove weld throat is $a_g = 0.028$. Since the combined weld throat ($0.0198 + 0.028 = 0.0478$) is less than $t = 0.065$, calculate L_{max} in accordance with UW-20.5(b)(2)(a).

$$L_{max} = F_f + F_g = 815 \text{ lb}$$

L-10.2.6 Calculation Results for Combined Groove and Fillet Welds Shown in Fig. UW-20.1, Sketch (d) Where a_f is Not Equal to a_g

L-10.2.6(a) Determine groove weld size a_g and the fillet weld size a_f as required by UW-20.5(a).

L-10.2.6(a)(1) Choose a_g, and then calculate F_g and f_f.

$a_g = 0.03$ in.
$F_g = 531$ lb
$f_f = 0.336$

L-10.2.6(a)(2) Calculate the minimum required length a_r of the fillet weld leg using the equation from UW-20.6(d).

$a_r = 0.0236$

L-10.2.6(a)(3) Determine the combined weld leg a_c in accordance with UW-20.6(d)(1).

$$a_c \geq a_r + a_g = 0.0236 + 0.03 = 0.0536 \text{ in.}$$

Choose $a_c = 0.0536$ in.

L-10.2.6(a)(4) Calculate a_f.

$$a_f = a_c - a_g = 0.0536 - 0.03 = 0.0236 \text{ in.}$$

L-10.2.6(b) Determine the maximum allowable axial load L_{max} as required by UW-20.5(b).

L-10.2.6(b)(1) For pressure induced axial forces, calculate L_{max} in accordance with UW-20.5(b)(1).

$F_f = 269$ lb
$F_g = 531$ lb
$L_{max} = F_f + F_g = 800$ lb

L-10.2.6(b)(2) For thermally induced or pressure plus thermally induced axial forces, use UW-20.5(b)(2). The fillet weld throat is $0.707a_f = 0.707(0.0236) = 0.0167$ and the groove weld throat is $a_g = 0.03$. Since the combined weld throat ($0.0167 + 0.03 = 0.0467$) is less than $t = 0.065$, calculate L_{max} in accordance with UW-20.5(b)(2)(a).

$$L_{max} = F_f + F_g = 800 \text{ lb}$$

NONMANDATORY APPENDIX M
INSTALLATION AND OPERATION

04

M-1 INTRODUCTION

(a) The rules in this Appendix are for general information only, because they pertain to the installation and operation of pressure vessels, which are the prerogative and responsibility of the law enforcement authorities in those states and municipalities which have made provision for the enforcement of Section VIII.

(b) It is permissible to use any departures suggested herein from provisions in the mandatory parts of this Division when granted by the authority having legal jurisdiction over the installation of pressure vessels.

M-2 CORROSION

(a) Vessels subject to external corrosion shall be so installed that there is sufficient access to all parts of the exterior to permit proper inspection of the exterior, unless adequate protection against corrosion is provided or unless the vessel is of such size and is so connected that it may readily be removed from its permanent location for inspection.

(b) Vessels having manholes, handholes, or cover plates to permit inspection of the interior shall be so installed that these openings are accessible.

(c) In vertical cylindrical vessels subject to corrosion, to insure complete drainage, the bottom head, if dished, should preferably be concave to pressure.

M-3 MARKING ON THE VESSEL

The marking required by this Division shall be so located that it will be accessible after installation and when installed shall not be covered with insulation or other material that is not readily removable [see UG-116(j)].

M-4 PRESSURE RELIEVING SAFETY DEVICES

The general provisions for the installation of pressure relieving devices are fully covered in UG-135. The following paragraphs contain details in arrangement of stop valves for shutoff control of safety pressure relief devices which are sometimes necessary to the continuous operation of processing equipment of such a complex nature that the shutdown of any part of it is not feasible. There are also rules with regard to the design of inlet and discharge piping to and from safety and relief valves, which can only be general in nature because the design engineer must fit the arrangement and proportions of such a system to the particular requirements in the operation of the equipment involved.

M-5 STOP VALVES LOCATED IN THE RELIEF PATH

A05

M-5.1 General

(a) Stop valve(s) located within the relief path is not allowed except as provided for in M-5.5, M-5.6, M-5.7, and M-5.8, and only when specified by the user. The responsibilities of the user are summarized in M-5.3. The specific requirements in M-5.5, M-5.6, M-5.7, and M-5.8 are not intended to allow for normal operation above the maximum allowable working pressure.

(b) The *pressure relief path* shall be designed such that the pressure in the equipment being protected does not exceed its maximum allowable working pressure before the pressure at the pressure relief device reaches its set pressure and the pressure does not exceed the limits of UG-125(c).

M-5.2 Definitions

administrative controls: procedures that, in combination with *mechanical locking elements*, are intended to ensure that personnel actions do not compromise the overpressure protection of the equipment. They include, as a minimum, Documented Operation and Maintenance Procedures, and Training of Operator and Maintenance Personnel in these procedures.

pressure relief path: consists of all equipment, pipe, fittings, and valves in the flow path between any protected equipment and its pressure relieving device, and between the pressure relieving device and the discharge point of the relieving stream. Stop valves within a pressure relief path include, but are not limited to, those located directly upstream and downstream of the Pressure Relief Device (PRD) that may be provided exclusively for PRD maintenance.

valve operation controls: devices used to ensure that stop valves within the pressure relief path are in their proper (open/closed) position. They include the following:

(a) mechanical interlocks which are designed to prevent valve operations which could result in the blocking of a pressure relief path before an alternative pressure relief path is put into service.

(b) instrumented interlocks which function similar to mechanical interlocks, except that instrument permissives and/or overrides are used instead of mechanical linkages/devices to prevent valve positions that block the pressure relief path.

(c) three-way valves designed to prevent a flow path from being blocked without another flow path being simultaneously opened.

valve failure controls: measure taken in valve design, configuration, and/or orientation of the purpose of preventing an internal failure of a stop valve from closing and blocking the pressure relief path. An example of *valve failure controls* is the installation of gate valves with the valve stem oriented at or below the horizontal position.

full area stop valve: a valve in which the flow area of the valve is equal to or larger than the inlet flow area of the pressure relief device.

mechanical locking elements: elements that when installed on a stop valve, provide a physical barrier to the operation of the stop valve, such that the stop valve is not capable of being operated unless a deliberate action is taken to remove or disable the element. Such elements, when used in combination with *adminstrative controls*, ensure that the equipment overpressure protection is not compromised by personnel actions. Examples of *mechanical locking elements* include locks (with or without chains) on the stop valve handwheels, levers, or actuators, and plastic or metal straps (car seals) that are secured to the valve in such a way that the strap must be broken to operate the stop valve.

management system: the collective application of *administrative controls, valve operation controls,* and *valve failure controls*, in accordance with the applicable requirements of this Division.

M-5.3 Responsibilites. The User has the responsibility to establish and maintain a management system that ensures a vessel is not operated without overpressure protection. These responsibilities include, but are not limited to, the following:

(a) Deciding and specifying if the overpressure protection system will allow the use of stop valve(s) located in the relief path.

(b) Establishing the pressure relief philosophy and the *administrative controls* requirements

(c) Establishing the required level of reliability, redundancy, and maintenance of instrumented interlocks, if used.

NOTE: The procedures contained in ISA S-84, "Application of Safety Instrumented Systems for the Process Industries", or IEC 61508, "Functional Safety of Electrical/Electronic/Programmable Electronic Safety-Related Systems" may be used for this purpose and analysis.

(d) Establishing procedures to ensure that the equipment is adequately protected against overpressure.

(e) Ensuring that authorization to operate identified valves is clear and that personnel are adequately trained for this task.

(f) Establishing management systems to ensure that *administrative controls* are effective.

(g) Establishing the analysis procedures and basis to be used in determining the potential levels of pressure if the stop valve(s) were closed.

(h) Ensuring that the analysis described in M-5.3(g) is conducted by personnel who are qualified and experienced with the analysis procedure.

(i) Ensuring that the other system components are acceptable for the potential levels of pressure established in M-5.3(g).

(j) Ensuring that the results of the analysis described in M-5.3(g) are documented and are reviewed and accepted in writing by the individual responsible for operation of the vessel and valves.

(k) Ensuring that the *administrative controls* are reviewed and accepted in writing by the individual responsible for operation of the vessel and valves.

A05 **M-5.4 Requirements of Procedures/Management System**

(a) Procedures shall specify that valves requiring mechanical locking elements and/or valve operation controls and/or valve failure controls shall be documented and clearly identified as such.

(b) The Management System shall document the administrative controls (training and procedures), the valve controls, and the performance of the administrative controls in an auditable form for management review.

A05 **M-5.5 Stop Valves Provided in Systems for Which the Pressure Originates Exclusively From an Outside Source.** A vessel or system [see UG-133(c)] for which the pressure originates from an outside source exclusively may have individual pressure relieving devices on each vessel, or connected to any point on the connecting piping, or on any one of the vessels to be protected. Under such an arrangement, there may be stop valve(s) between any vessel and the pressure relieving devices, and these stop valve(s) need not have any administrative controls, valve operation controls, or valve failure controls, provided that the stop valves also isolate the vessel from the source of pressure.

A05 **M-5.6 Stop Valve(s) Provided Upstream or Downstream of the Pressure Relief Device Exclusively for Maintenance of That Device.** Full area stop valve(s) may be provided upstream and/or downstream of the pressure relieving device for the purpose of inspection, testing, and repair of the pressure relieving device or discharge header isolation, provided that, as a minimum, the following requirements are complied with:

(a) administrative controls are provided to prevent unauthorized valve operation

(b) valves are provided with mechanical locking elements

(c) valve failure controls are provided to prevent accidental valve closure due to mechanical failure.

(d) Procedures are in place to provide pressure relief protection during the time when the system is isolated from its pressure relief path. These procedures shall ensure that when the system is isolated from its pressure relief path, an authorized person shall continuously monitor the pressure conditions of the vessel and shall be capable of responding promptly with documented, predefined actions, either stopping the source of overpressure or opening alternative means of pressure relief. This authorized person shall be dedicated to this task and shall have no other duties when performing this task.

(e) The system shall be isolated from its pressure relief path only for the time required to test, repair, and or replace the pressure relief device.

A05 **M-5.7 Stop Valve(s) Provided in the Pressure Relief Path Where There is Normally Process Flow.** Stop valve(s), excluding remotely operated valves, may be provided in the relief path where there is normally a process flow, provided the requirements in M-5.7(a) and (b), as a minimum, are complied with. These requirements are based on the potential overpressure scenarios involving accidental closure of a single stop valve within the relief path [see M-5.3(g)]. The accidental closure of these stop valve(s) in the pressure relief system need not be considered in setting the design pressure per UG-21.

(a) The flow resistance of the valve in the full open position does not reduce the relieving capacity below that required by the rules of this Division.

(b) The closure of the valve will be readily apparent to the operators such that corrective action, in accordance with documented operating procedures, is required, and

(1) if the pressure due to closure of the valve can not exceed 116% of MAWP, then no administrative controls, mechanical locking elements, valve operation controls, or valve failure controls are required, or

(2) if the pressure due to closure of the valve can not exceed the following:

(a) the documented test pressure, multiplied by the ratio of the stress value at the design temperature to the stress value at the test temperature, or

(b) if the test pressure is calculated per UG-99(c) in addition to the ratio in M-5.7(b)(2)(a), the test pressure shall also be multiplied by the ratio of the nominal thickness minus the corrosion allowance to the nominal thickness then, as a minimum, administrative controls and mechanical locking elements are required, or

(3) if the pressure due to closure of the valve could exceed the pressure in M-5.7(b)(2), then the user shall either

(a) eliminate the stop valve, or

(b) apply administrative controls, mechanical locking elements, valve failure controls, and valve operation controls, or

(c) provide a pressure relief device to protect the equipment that could be overpressured due to closure of the stop valve

A05 **M-5.8 Stop Valves Provided in the Relief Path of Equipment Where Fire Is the Only Potential Source of Overpressure.** Full area stop valve(s) located in the relief path of equipment where fire is the only potential source of overpressure do not require mechanical locking elements, valve operation controls, or valve failure controls provided the user has documented operating procedures requiring that equipment isolated from its pressure relief path is depressured and free of all liquids.

M-6 INLET PRESSURE DROP FOR HIGH LIFT, TOP GUIDED SAFETY, SAFETY RELIEF, AND PILOT OPERATED PRESSURE RELIEF VALVES IN COMPRESSIBLE FLUID SERVICE

(a) The nominal pipe size of all piping, valves and fittings, and vessel components between a pressure vessel and its safety, safety relief, or pilot operated pressure relief valves shall be at least as large as the nominal size of the device inlet, and the flow characteristics of the upstream system shall be such that the cumulative total of all nonrecoverable inlet losses shall not exceed 3% of the valve set pressure. The inlet pressure losses will be based on the valve nameplate capacity corrected for the characteristics of the flowing fluid.

(b) When two or more required safety, safety relief, or pilot operated pressure relief valves are placed on one connection, the inlet internal cross-sectional area of this connection shall be either sized to avoid restricting flow to the pressure relief valves or made at least equal to the combined inlet areas of the safety valves connected to it. The flow characteristics of the upstream system shall meet the requirements of (a) above with all valves relieving simultaneously.

M-7 DISCHARGE LINES FROM SAFETY DEVICES

(a) Where it is feasible, the use of a short discharge pipe or vertical riser, connected through long-radius elbows from each individual device, blowing directly to the atmosphere, is recommended. Such discharge pipes shall be at least of the same size as the valve outlet. Where the nature of the discharge permits, telescopic (sometimes called "broken") discharge lines, whereby condensed vapor in the discharge line, or rain, is collected in a drip pan and piped to a drain, are recommended.[1]

(b) When discharge lines are long, or where outlets of two or more valves having set pressures within a comparable range are connected into a common line, the effect of the back pressure that may be developed therein when certain valves operate must be considered [see UG-135(f)]. The sizing of any section of a common-discharge header downstream from each of the two or more pressure relieving devices that may reasonably be expected to discharge simultaneously shall be based on the total of their outlet areas, with due allowance for the pressure drop in all downstream sections. Use of specially designed valves suitable for use on high or variable back pressure service should be considered.

(c) The flow characteristics of the discharge system of high lift, top guided safety, safety relief, or pilot operated pressure relief valves in compressible fluid service shall be such that the static pressure developed at the discharge flange of a conventional direct spring loaded valve will not exceed 10% of the set pressure when flowing at stamp capacity. Other valve types exhibit various degrees of tolerance to back pressure and the manufacturer's recommendation should be followed.

(d) All discharge lines shall be run as direct as is practicable to the point of final release for disposal. For the longer lines, due consideration shall be given to the advantage of long-radius elbows, avoidance of closeup fittings, and the minimizing of excessive line strains by expansion joints and well-known means of support to minimize line-sway and vibration under operating conditions.

(e) Provisions should be made in all cases for adequate drainage of discharge lines.

NOTE: It is recognized that no simple rule can be applied generally to fit the many installation requirements, which vary from simple short lines that discharge directly to the atmosphere to the extensive manifold discharge piping systems where the quantity and rate of the product to be disposed of requires piping to a distant safe place.

M-8 PRESSURE DROP, NONRECLOSING PRESSURE RELIEF DEVICES

Piping, valves and fittings, and vessel components comprising part of a nonreclosing device pressure relieving system shall be sized to prevent the vessel pressure from rising above the allowable overpressure.

M-9 GENERAL ADVISORY INFORMATION ON THE CHARACTERISTICS OF SAFETY RELIEF VALVES DISCHARGING INTO A COMMON HEADER

Because of the wide variety of types and kinds of safety relief valves, it is not considered advisable to attempt a description in this Appendix of the effects produced by discharging them into a common header. Several different types of valves may conceivably be connected into the same discharge header and the effect of back pressure on each type may be radically different. Data compiled by the manufacturers of each type of valve used should be consulted for information relative to its performance under the conditions anticipated.

[1] This construction has the further advantage of not transmitting discharge-pipe strains to the valve. In these types of installation, the back pressure effect will be negligible, and no undue influence upon normal valve operation can result.

likely with bolts of small diameter and with bolt materials having a relatively low yield strength. The yield strength of mild carbon steel, annealed austenitic stainless steel, and certain of the nonferrous bolting materials can easily be exceeded with ordinary wrench effort in the smaller bolt sizes. Even if no damage is evident, any additional load generated when internal pressure is applied can produce further yielding with possible leakage. Such yielding can also occur when there is very little margin between initial bolt stress and yield strength.

An increase in bolt stress, above any that may be due to internal pressure, might occur in service during startup or other transient conditions, or perhaps even under normal operation. This can happen when there is an appreciable differential in temperature between the flanges and the bolts, or when the bolt material has a different coefficient of thermal expansion than the flange material. Any increase in bolt load due to this thermal effect, superposed on the load already existing, can cause yielding of the bolt material, whereas any pronounced decrease due to such effects can result in such a loss of bolt load as to be a direct cause of leakage. In either case, retightening of the bolts may be necessary, but it must not be forgotten that the effects of repeated retightening can be cumulative and may ultimately make the joint unserviceable.

In addition to the difficulties created by yielding of the bolts as described above, the possibility of similar difficulties arising from yielding of the flange or gasket material, under like circumstances or from other causes, should also be considered.

Excessive bolt stress, whatever the reason, may cause the flange to yield, even though the bolts may not yield. Any resulting excessive deflection of the flange, accompanied by permanent set, can produce a leaking joint when other effects are superposed. It can also damage the flange by making it more difficult to effect a tight joint thereafter. For example, irregular permanent distortion of the flange due to uneven bolt load around the circumference of the joint can warp the flange face and its gasket contact surface out of a true plane.

The gasket, too, can be overloaded, even without excessive bolt stress. The full initial bolt load is imposed entirely on the gasket, unless the gasket has a stop ring or the flange face detail is arranged to provide the equivalent. Without such means of controlling the compression of the gasket, consideration must be given to the selection of gasket type, size and material that will prevent gross crushing of the gasket.

From the foregoing, it is apparent that the bolt stress can vary over a considerable range above the design stress value. The design stress values for bolting in Table 3 of Section II, Part D have been set at a conservative value to provide a factor against yielding. At elevated temperatures, the design stress values are governed by the creep rate and stress-rupture strength. Any higher bolt stress existing before creep occurs in operation will have already served its purpose of seating the gasket and holding the hydrostatic test pressure, all at atmospheric temperature, and is not needed at the design pressure and temperature.

Theoretically, the margin against flange yielding is not as great. The design values for flange materials may be as high as five-eighths or two-thirds of the yield strength. However, the highest stress in a flange is usually the bending stress in the hub or shell, and is more or less localized. It is too conservative to assume that local yielding is followed immediately by overall yielding of the entire flange. Even if a "plastic hinge" should develop, the ring portion of the flange takes up the portion of the load the hub and shell refuse to carry. Yielding is far more significant if it occurs first in the ring, but the limitation in the rules on the combined hub and ring stresses provides a safeguard. In this connection, it should be noted that a dual set of stresses is given for some of the materials in Table 3 of Section II, Part D, and that the lower values should be used in order to avoid yielding in the flanges.

Another very important item in bolting design is the question of whether the necessary bolt stress is actually realized, and what special means of tightening, if any, must be employed. Most joints are tightened manually by ordinary wrenching, and it is advantageous to have designs that require no more than this. Some pitfalls must be avoided, however. The probable bolt stress developed manually, when using standard wrenches, is

$$S = \frac{45{,}000}{\sqrt{d}}$$

where

S = the bolt stress
d = the nominal diameter of the bolt

It can be seen that smaller bolts will have excessive stress unless judgment is exercised in pulling up on them. On the other hand, it will be impossible to develop the desired stress in very large bolts by ordinary hand wrenching. Impact wrenches may prove serviceable, but if not, resort may be had to such methods as preheating the bolt, or using hydraulically powered bolt tensioners. With some of these methods, control of the bolt stress is possible by means inherent in the procedure, especially if effective thread lubricants are employed, but in all cases the bolt stress can be regulated within reasonable tolerances by measuring the bolt elongation with suitable extensometer equipment. Ordinarily, simple wrenching without verification of the actual bolt stress meets all practical needs,

and measured control of the stress is employed only when there is some special or important reason for doing so.

A05 S-2 DELETED

FORM U-1A MANUFACTURER'S DATA REPORT FOR PRESSURE VESSELS
(Alternative Form for Single Chamber, Completely Shop or Field Fabricated Vessels Only)
As Required by the Provisions of the ASME Code Rules, Section VIII, Division 1

04
A05

1. Manufactured and certified by _____ (1) _____ (Name and address of manufacturer)
2. Manufactured for _____ (2) _____ (Name and address of purchaser)
3. Location of installation _____ (3) _____ (Name and address)
4. Type (5) (Horiz. or vert., tank) _____ (8) (Mfgrs serial No.) _____ (9) (CRN) _____ (10) (Drawi ng No.) _____ (12) (Natl. Bd. No.) _____ (Year built)
5. The chemical and physical properties of all parts meet the requirements of material specifications of the ASME BOILER AND PRESSURE VESSEL CODE. The design, construction, and workmanship conform to ASME Rules, Section VIII, Division 1 _____ (13) Year
   to _____ (13) Addenda (Date) _____ (14) Code Case Nos. _____ (15) Special Service per UG-120(d)
6. Shell: _____ (20) Matl. (Spec. No., Grade) _____ (21) Nom. Thk. (in.) _____ (22) Corr. Allow. (in.) _____ (18) Diam. I.D. (ft. & in.) _____ (17) Length (overall) (ft. & in.)
7. Seams: _____ (23) Long. (Welded, Dbl., Sngl., Lap, Butt) _____ (24) R.T. (Spot or Full) _____ (24) Eff. (%) _____ (27) H.T. Temp. (°F) _____ (27) Time (hr) _____ (25) Girth, (Welded, Dbl., Sngl., Lap, Butt) _____ (26) R.T. (Spot or Full) _____ (26) Eff. (%) _____ (16) No. of Courses
8. Heads: (a) Matl. _____ (17) (27) (31) (Spec. No., Grade) (b) Matl. _____ (Spec. No., Grade)

	Location (Top, Bottom, Ends)	Minimum Thickness	Corrosion Allowance	Crown Radius	Knuckle Radius	Elliptical Ratio	Conical Apex Angle	Hemispherical Radius	Flat Diameter	Side to Pressure (Convex or Concave)
(a)		(28)	(22)	(29)	(30)					
(b)										

If removable, bolts used (describe other fastenings) _____ (32) (Mat'l., Spec. No., Gr., Size, No.)

9. MAWP _____ (35) (internal) _____ (external) psi at max. temp. _____ (36) (internal) _____ (external) °F.
   Min. design metal temp. _____ (37) °F at _____ psi. Hydro., pneu., or comb. test pressure _____ (39) psi.
10. Nozzles, inspection and safety valve openings:

Purpose (Inlet, Outlet, Drain)	No.	Diam. or Size	Type	Matl.	Nom. Thk.	Reinforcement Matl.	How Attached	Location
(41)		(42)	(42) (43)	(20)	(46)		(48)	(50)
			(48)	(44)				

11. Supports: Skirt _____ (51) (Yes or no) Lugs _____ (No.) Legs _____ (No.) Other _____ (Describe) Attached _____ (Where and how)
12. Remarks: Manufacturer's Partial Data Reports properly identified and signed by Commissioned Inspectors have been furnished for the following items of the report: _____ (Name of part, item number, Mfgr's. name and identifying stamp)
    (38) (52) (53)

(58)

CERTIFICATE OF SHOP/FIELD COMPLIANCE

We certify that the statements made in this report are correct and that all details of design, material, construction, and workmanship of this vessel conform to the ASME Code for Pressure Vessels, Section VIII, Division 1. "U" Certificate of Authorization No. _____ (58) _____ expires _____.

Date _____ Co. name _____ (58) (Manufacturer) Signed _____ (58) (Representative)

(60)

CERTIFICATE OF SHOP/FIELD INSPECTION

Vessel constructed by _____ at _____.

I, the undersigned, holding a valid commission issued by the National Board of Boiler and Pressure Vessel Inspectors and/or the State or Province of _____ (61) _____ and employed by _____ have inspected the component described in this Manufacturer's Data Report on _____, and state that, to the best of my knowledge and belief, the Manufacturer has constructed this pressure vessel in accordance with ASME Code, Section VIII, Division 1. By signing this certificate neither the Inspector nor his employer makes any warranty, expressed or implied, concerning the pressure vessel described in this Manufacturer's Data Report. Furthermore, neither the Inspector nor his employer shall be liable in any manner for any personal injury or property damage or a loss of any kind arising from or connected with this inspection.

Date _____ Signed _____ (60) (Authorized Inspector) Commissions _____ (62) [Nat'l Board (incl. endorsements), State, Prov. and No.]

This form (E00117) may be obtained from the ASME Order Dept., 22 Law Drive, Box 2300, Fairfield, NJ 07007-2300.

FORM U-2 MANUFACTURER'S PARTIAL DATA REPORT
A Part of a Pressure Vessel Fabricated by One Manufacturer for Another Manufacturer
As Required by the Provisions of the ASME Code Rules, Section VIII, Division 1

1. Manufactured and certified by _____ (1) (Name and address of Manufacturer)

2. Manufactured for _____ (2) (Name and address of Purchaser)

3. Location of installation _____ (3) (56) (Name and address)

4. Type: _____ (7) [Description of vessel part (shell, two-piece head, tube bundle)] _____ (8) (Mfg's serial No.) _____ (9) (CRN)

_____ (12) (Nat'l. Bd. No.) _____ (10) (Drawing No.) _____ (11) (57) (Drawing prepared by) _____ (Year built)

5. ASME Code, Section VIII, Div. 1 _____ (13) [Edition and Addenda (date)] _____ (14) (Code Case No.) _____ (15) (56) [Special Service per UG-120(d)]

Items 6–11 incl. to be completed for single wall vessels, jackets of jacketed vessels, shell of heat exchangers, or chamber of multichamber vessels.

6. Shell (a) No. of course(s): _____ (16) (b) Overall length (ft & in.): _____ (17)

Course(s)			Material	Thickness		Long. Joint (Cat. A)			Circum. Joint (Cat. A, B, & C)			Heat Treatment	
No.	Diameter, in.	Length (ft & in.)	Spec./Grade or Type	Nom.	Corr.	Type	Full, Spot, None	Eff.	Type	Full, Spot, None	Eff.	Temp.	Time
	(18)	(19)	(20)	(21)	(22)	(23)	(24)		(25)	(26)		(27)	

7. Heads: (a) _____ (20) (27) (Mat'l Spec. No., Grade or Type) (H.T. — Time & Temp.) (b) _____ (Mat'l Spec. No., Grade or Type) (H.T. — Time & Temp.)

	Location (Top, Bottom, Ends)	Thickness		Radius		Elliptical Ratio	Conical Apex Angle	Hemispherical Radius	Flat Diameter	Side to Pressure		Category A		
		Min.	Corr.	Crown	Knuckle					Convex	Concave	Type	Full, Spot, None	Eff.
(a)		(28)	(22)	(29)	(30)								(31)	
(b)														

If removable, bolts used (describe other fastening) _____ (32) (Mat'l Spec. No., Grade, Size, No.)

8. Type of jacket _____ (33) Jacket closure _____ (34) (Describe as ogee & weld, bar, etc.)

If bar, give dimensions _____ If bolted, describe or sketch.

9. MAWP _____ (35) (56) (internal) _____ (external) psi at max. temp. _____ (36) (internal) _____ (external) °F. Min. design metal temp. _____ (37) °F at _____ psi.

10. Impact test _____ (38) [Indicate *yes* or *no* and the component(s) impact tested] at test temperature of _____ (38) °F.

11. Hydro., pneu., or comb. test press. _____ (39) Proof test _____ (40)

Items 12 and 13 to be completed for tube sections.

12. Tubesheet: _____ (20) [Stationary (Mat'l Spec. No.)] _____ (18) [Dia., In. (subject to press.)] _____ (21) (Nom. thk., in.) _____ (22) (56) (Corr. Allow., in.) _____ [Attachment (welded or bolted)]

_____ (20) [Floating (Mat'l Spec. No.)] _____ (18) (Dia., in.) _____ (21) (Nom. thk., in.) _____ (22) (56) (Corr. Allow., in.) _____ (Attachment)

13. Tubes: _____ (20) (Mat'l Spec. No., Grade or Type) _____ (O.D., in.) _____ (Nom. thk., in. or gauge) _____ (Number) _____ [Type (Straight or U)]

Items 14–18 incl. to be completed for inner chambers of jacketed vessels or channels of heat exchangers.

14. Shell (a) No. of course(s) _____ (b) Overall length (ft & in.): _____

Course(s)			Material	Thickness		Long. Joint (Cat. A)			Circum. Joint (Cat. A, B, & C)			Heat Treatment	
No.	Diameter, in.	Length (ft & in.)	Spec./Grade or Type	Nom.	Corr.	Type	Full, Spot, None	Eff.	Type	Full, Spot, None	Eff.	Temp.	Time
	(18)	(19)	(20)	(21)	(22)	(23)	(24)		(25)	(26)		(27)	

FORM U-2 (Back)

A05

15. Heads: (a) _____ (Mat'l Spec. No., Grade or Type) (H.T. — Time & Temp.) (b) _____ (Mat'l Spec. No., Grade or Type) (H.T. — Time & Temp.)

	Location (Top, Bottom, Ends)	Thickness		Radius		Elliptical Ratio	Conical Apex Angle	Hemispherical Radius	Flat Diameter	Side to Pressure		Category A		
		Min.	Corr.	Crown	Knuckle					Convex	Concave	Type	Full, Spot, None	Eff.
(a)														
(b)														

If removable, bolts used (describe other fastening) _____ (Mat'l Spec. No., Grade, Size, No.)

16. MAWP _____ (internal) _____ (external) psi at max. temp. _____ (internal) _____ (external) °F. Min. design metal temp. _____ °F at _____ psi.

17. Impact test _____ (38) [Indicate *yes* or *no* and the component(s) impact tested] at test temperature of _____ (38) °F.

18. Hydro., pneu., or comb. test press. _____ Proof test _____

19. Nozzles, inspection, and safety valve openings:

Purpose (Inlet, Outlet, Drain, etc.)	No.	Diameter or Size	Flange Type	Material		Nozzle Thickness		Reinforcement Material	How Attached		Location (Insp. Open.)
				Nozzle	Flange	Nom.	Corr.		Nozzle	Flange	
				(20)	(20)						
(41)		(42)	(43)	(44)	(45)	(46)		(47)	(48) (49)	(48) (49)	(50)

20. Identification of part(s) (68)

Name of Part	Quantity	Line No.	Mfr's. Identification No.	Mfr's. Drawing No.	CRN	National Board No.	Year Built
(69)		(70)	(71)	(10)	(9)	(12)	

21. Supports: Skirt _____ (51) (Yes or no) Lugs _____ (51) (No.) Legs _____ (51) (No.) Others _____ (51) (Describe) Attached _____ (51) (Where and how)

22. Remarks: _____

(53)

(58)

CERTIFICATE OF SHOP/FIELD COMPLIANCE

We certify that the statements made in this report are correct and that all details of material, construction, and workmanship of this pressure vessel part conform to the ASME Code for Pressure Vessels, Section VIII, Division 1.

U Certificate of Authorization No. _____ Expires _____

Date _____ Name _____ (Manufacturer) Signed _____ (Representative)

(60)

CERTIFICATE OF SHOP/FIELD INSPECTION

I, the undersigned, holding a valid commission issued by the National Board of Boiler and Pressure Vessel Inspectors and/or the State or Province of _____ (61) and employed by _____ of _____ have inspected the pressure vessel part described in this Manufacturer's Data Report on _____, and state that, to the best of my knowledge and belief, the Manufacturer has constructed this pressure vessel part in accordance with ASME Code, Section VIII, Division 1. By signing this certificate neither the Inspector nor his employer makes any warranty, expressed or implied, concerning the pressure vessel part described in this Manufacturer's' Data Report. Furthermore, neither the Inspector nor his employer shall be liable in any manner for any personal injury or property damage or a loss of any kind arising from or connected with this inspection.

Date _____ Signed _____ (Authorized Inspector) Commissions _____ (63) (Nat'l Board incl. endorsement, State, Province and No.)

A05

FORM U-2A MANUFACTURER'S PARTIAL DATA REPORT (ALTERNATIVE FORM)
A Part of a Pressure Vessel Fabricated by One Manufacturer for Another Manufacturer
As Required by the Provisions of the ASME Code Rules, Section VIII, Division 1

1. Manufactured and certified by _____ (1) (Name and address of Manufacturer)
2. Manufactured for _____ (2) (Name and address of Purchaser)
3. Location of installation _____ (3) (56) (Name and address)
4. Type: _____ (7) [Description of vessel part (shell, two-piece head, tube bundle)] _____ (8) (Mfg's serial No.) _____ (9) (CRN)
   _____ (12) (Nat'l. Bd. No.) _____ (10) (Drawing No.) _____ (11) (57) (Drawing prepared by) _____ (Year built)
5. ASME Code, Section VIII, Div. 1 _____ (13) [Edition and Addenda (date)] _____ (14) (Code Case No.) _____ (15) (56) [Special Service per UG-120(d)]
6. Shell (a) No. of course(s): _____ (16) (b) Overall length (ft & in.): _____ (17)

Course(s)			Material	Thickness		Long. Joint (Cat. A)			Circum. Joint (Cat. A, B, & C)			Heat Treatment	
No.	Diameter, in.	Length (ft & in.)	Spec./Grade or Type	Nom.	Corr.	Type	Full, Spot, None	Eff.	Type	Full, Spot, None	Eff.	Temp.	Time
	(18)	(19)	(20)	(21)	(22)	(23)	(24)		(25)	(26)		(27)	
				(56)									

7. Heads: (a) _____ (20) (27) (Mat'l Spec. No., Grade or Type) (H.T. — Time & Temp.) (b) _____ (Mat'l Spec. No., Grade or Type) (H.T. — Time & Temp.)

	Location (Top, Bottom, Ends)	Thickness		Radius		Elliptical Ratio	Conical Apex Angle	Hemispherical Radius	Flat Diameter	Side to Pressure		Category A		
		Min.	Corr.	Crown	Knuckle					Convex	Concave	Type	Full, Spot, None	Eff.
(a)		(28)	(22)	(29)	(30)								(31)	
(b)			(56)											

If removable, bolts used (describe other fastening) _____ (32) (Mat'l Spec. No., Grade, Size, No.)

8. MAWP _____ (35) (56) (internal) _____ (external) psi at max. temp. _____ (36) (internal) _____ (external) °F. Min. design metal temp. _____ (37) (56) °F at _____ psi.
9. Impact test _____ (38) [Indicate *yes* or *no* and the component(s) impact tested] at test temperature of _____ (38) °F.
10. Hydro., pneu., or comb. test press. _____ (39) Proof test _____ (40)
11. Nozzles, inspection, and safety valve openings:

Purpose (Inlet, Outlet, Drain, etc.)	No.	Diameter or Size	Flange Type	Material		Nozzle Thickness		Reinforcement Material	How Attached		Location (Insp. Open.)
				Nozzle	Flange	Nom.	Corr.		Nozzle	Flange	
				(20)	(20)						
(41)		(42)	(43)	(44)	(45)	(46)		(47)	(48) (49)	(48) (49)	(50)

12. Identification of part(s) (68)

Name of Part	Quantity	Line No.	Mfr's. Identification No.	Mfr's. Drawing No.	CRN	National Board No.	Year Built
(69)		(70)	(71)	(10)	(9)	(12)	

13. Supports: Skirt _____ (51) (Yes or no) Lugs _____ (51) (No.) Legs _____ (51) (No.) Others _____ (51) (Describe) Attached _____ (51) (Where and how)
14. Remarks: _____ (53)

(58)

CERTIFICATE OF SHOP/FIELD COMPLIANCE

We certify that the statements made in this report are correct and that all details of material, construction, and workmanship of this pressure vessel part conform to the ASME Code for Pressure Vessels, Section VIII, Division 1.

U Certificate of Authorization No. _____ Expires _____

Date _____ Name _____ (Manufacturer) Signed _____ (Representative)

(60)

CERTIFICATE OF SHOP/FIELD INSPECTION

I, the undersigned, holding a valid commission issued by the National Board of Boiler and Pressure Vessel Inspectors and/or the State or Province of _____ (61) and employed by _____ of _____ have inspected the pressure vessel part described in this Manufacturer's Data Report on _____, and state that, to the best of my knowledge and belief, the Manufacturer has constructed this pressure vessel part in accordance with ASME Code, Section VIII, Division 1. By signing this certificate neither the Inspector nor his employer makes any warranty, expressed or implied, concerning the pressure vessel part described in this Manufacturer's' Data Report. Furthermore, neither the Inspector nor his employer shall be liable in any manner for any personal injury or property damage or a loss of any kind arising from or connected with this inspection.

Date _____ Signed _____ (Authorized Inspector) Commissions _____ (63) (Nat'l Board incl. endorsement, State, Province and No.)

TABLE W-3 (CONT'D)
INSTRUCTIONS FOR THE PREPARATION OF MANUFACTURER'S DATA REPORTS

Applies to Form						Note	
U-1	U-1A	U-2	U-2A	U-3	U-4	No.	Instruction
X	X	X	X	X	...	(37)	Indicate the minimum design metal temperature (MDMT).
X	X	X	X	X	...	(38)	Indicate if impact testing was conducted (yes or no) and the component(s) that were impact tested and the impact test temperature. Where more space is needed, use "Remarks" section or list on a supplement page. If no, indicate applicable paragraph(s) [such as UG-20(f), UCS-66(a), UCS-66(b), or UCS-66(c), and UHA-51 or UHT-6].
X	X	X	X	X	...	(39)	Indicate the type of test used (pneumatic, hydrostatic, or combination test, as applicable) and specify test pressure at the top of the vessel in the test position. Indicate under "Remarks" if the vessel was tested in the vertical position.
X	...	X	X	X	...	(40)	When proof test is required by Code rules, indicate type (e.g., brittle-coating, bursting, etc.), specific Code requirements satisfied (UG-101, Appendix 9, Appendix 17), proof test pressure, and acceptance date by the Inspector. Subsequent Data Reports shall indicate under "Remarks" the test date, type and acceptance date by the Inspector.
X	X	X	X	X	...	(41)	Nozzles, inspection, and safety valve openings; list all openings, regardless of size and use. Where more space is needed, list them on a supplemental page.
X	X	X	X	X	...	(42)	Indicate nozzles by size (NPS) and inspection openings by inside dimensions in inches.
X	X	X	X	X	...	(43)	Data entries with description acceptable to the Inspector. For flange type an abbreviation may be used to define any generic name. Some typical abbreviations: Flanged fabricated nozzle — Cl. 150 flg. Long weld neck flange — Cl. 300 lwn. Weld end fabricated nozzle — w.e. Lap joint flange — Cl. 150 lap jnt.
X	X	X	X	X	...	(44)	Show the material for the nozzle neck.
X	...	X	X	X	...	(45)	Show the material for the flange.
X	X	X	X	X	...	(46)	Nominal thickness applies to nozzle neck thickness.
X	...	X	X	X	...	(47)	Show the complete ASME specification number and grade of the actual material used for the reinforcement material (pad). Material is to be as designated in Section VIII, Division 1. Exceptions: A specification number for a material not identical to an ASME specification may be shown only if such material meets the criteria in the Code and in conjunction with the Foreword of this Section. When material is accepted through a Code Case, the applicable Case number shall be shown.
X	X	X	X	X	...	(48)	Data entries with description acceptable to the Inspector. A code identification of Fig. UW-16.1 (sketch no.) may be used to define the type of attachment.
X	...	X	X	X	...	(49)	Categories C and D welds — Identify degree of examination (radiographic or if applicable ultrasonic) employed: full, spot, or none (see UW-11). Also identify the joint efficiency associated with the weld from Table UW-12. When more space is needed, use "Remarks" section supplemental page or RT map, as applicable.
X	X	X	X	X	...	(50)	"Location" applies to inspection openings only.
X	X	X	X	X	...	(51)	Describe: (a) type of support (skirt, lugs, etc.); (b) location of support (top, bottom, side, etc.); (c) method of attachment (bolted, welded, etc.).

A05

TABLE W-3 (CONT'D)
INSTRUCTIONS FOR THE PREPARATION OF MANUFACTURER'S DATA REPORTS

Applies to Form						Note	
U-1	U-1A	U-2	U-2A	U-3	U-4	No.	Instruction
X	X	...	...	X	...	(52)	To be completed when one or more parts of the vessel are furnished by others and certified on Data Report U-2 or U-2A. The part manufacturer's name and serial number required by UG-116 should be indicated.
X	X	X	X	X	...	(53)	Space for additional comments including any Code restrictions on the vessel, or any unusual requirements that have been met, such as those in U-2(g), UG-11, UG-46, UG-53, UG-79, UG-90(c)(2), UG-99(e)(2), UG-115, UG-119(g), UG-120(d), UCS-56(f)(1), and UCL-55 or in other notes to this Table. Indicate stiffening rings when used. See W-2(d) when additional space is needed.
...	...	...	...	...	X	(54)	Fill in information identical to that shown on the Data Report Form to which this sheet is supplementary. Indicate the type of Certificate of Authorization, number, expiration date, and signature of the company representative.
...	...	...	...	...	X	(55)	Fill in information for which there was insufficient space on the Data Report Form as indicated by the notation "See attached U-4 Form" on the Data Report. See W-2(d). Identify the applicable Data Report item number.
...	...	X	X	...	...	(56)	Indicate data, if known.
...	...	X	X	...	...	(57)	Indicate the extent, if any, of the design function performed, UG-120(c)(2).
X	X	X	X	...	...	(58)	Certificate of Shop/Field Compliance block is to show the name of the Manufacturer as shown on his ASME Code Certificate of Authorization. This should be signed in accordance with the organizational authority defined in the Quality Control System (10-4).
...	...	...	...	X	...	(59)	Manufacturer's authorization number to use the UM Symbol from his Certificate of Authorization.
X	X	X	X	...	...	(60)	Certificate of Shop/Field Inspection block is to be completed by the Manufacturer and signed by the Authorized Inspector who performs the inspection.
X	...	X	X	...	...	(61)	If the Inspector has a valid commission for the state or province where the Manufacturer's shop is located, the name of that state or province. If the Manufacturer is located in a non-Code state or province, insert the name of the state or province where the Inspector took his original examination to obtain his National Board Commission, provided he still has a valid commission for that state or province. Otherwise, if no valid commission, show the name of the state or province where he has a valid commission authorizing him to make inspection.
X	X	...	...	...	X	(62)	The Inspector's National Board Commission number must be shown when the pressure vessel is stamped National Board; otherwise show only his state or province commission number.
...	...	X	X	...	X	(63)	The Inspector's National Board Commission number must be shown when the pressure vessel part is stamped National Board; otherwise show only his state or province commission number.
X	...	...	...	...	...	(64)	Certificate of Field Assembly Compliance block for field work or assembly is to be signed by the Manufacturer's representative in charge of field fabrication. This should be signed in accordance with the organizational authority defined in the quality control system (10-4).
X	...	...	...	...	...	(65)	Certificate of Field Assembly Inspection block is for the Authorized Inspector to sign for any field construction or assembly work. See (61) for National Board Commission number requirements.
X	...	...	...	...	...	(66)	Indicate those items inspected in the field that were not inspected in the shop.
...	...	...	...	X	...	(67)	Signature of Certified Individual indicates ASME Code symbol has been applied in accordance with the requirements of Section VIII, Division 1.
...	...	X	X	...	...	(68)	Identification of individual parts documented by the Form U-2 or Form U-2A. See UG-116(h)(2).
...	...	X	X	...	...	(69)	Show the name of the part.
...	...	X	X	...	...	(70)	Show data line number of Form U-2 or Form U-2A for the named part.
...	...	X	X	...	...	(71)	Show the manufacturer's serial number or other identifying number stamped on the part.

NONMANDATORY APPENDIX DD
GUIDE TO INFORMATION APPEARING ON CERTIFICATE OF AUTHORIZATION
(SEE FIG. DD-1)

A05

ITEM	DESCRIPTION
①	a. The name of the Manufacturer or Assembler. b. The full street address, city, state or province, country, and zip code.
②	This entry describes the scope and limitations, if any, on use of the Code Symbol Stamps. Illustrated below are some examples of Scope statements.

U Code Symbol Stamp

1. Manufacture of pressure vessels at the above location only.
2. Manufacture of pressure vessels at the above location only. (This authorization includes multiple duplicate pressure vessels.)
3. Manufacture of pressure vessels at the above location only. (This authorization does not cover welding or brazing.)
4. Manufacture of pressure vessels at the above location and field sites controlled by the above location.
5. Manufacture of pressure vessels at the above location and field sites controlled by the above location. (This authorization does not cover welding or brazing.)
6. Manufacture of pressure vessels at field sites controlled by the above location.
7. Manufacture of pressure vessels at field sites controlled by the above location. (This authorization does not cover welding or brazing.)
8. Manufacture of pressure vessels (cast iron only) at the above location only.
9. Manufacture of pressure vessel parts at the above location only.
10. Manufacture of pressure vessel parts at the above location and field sites controlled by the above location.
11. Manufacture of pressure vessel parts at field sites controlled by the above location.
12. Manufacture of pressure vessel parts (cast iron only) at the above location only.

UM Code Symbol Stamp

1. Manufacture of miniature vessels at the above location only.
2. Manufacture of miniature vessels at the above location only. (This authorization does not cover welding or brazing.)
3. Manufacture of miniature vessels (cast iron only) at the above location only.

ITEM	DESCRIPTION
	UV Code Symbol Stamp 1. Manufacture of pressure vessel pressure relief valves at the above location only. 2. Manufacture of pressure vessel pressure relief valves at the above location only. (This authorization does not cover welding or brazing.) 3. Assembly of pressure vessel pressure relief valves at the above location. (This authorization does not cover welding or brazing.)
③	The date authorization was granted by the Society to use the indicated Code Symbol Stamp.
④	The date authorization to use the Code Symbol Stamp will expire.
⑤	A unique Certificate number assigned by the Society.
⑥	Code Symbol granted by the Society, i.e., U pressure vessels, UM miniature vessels, UV pressure relief valves.
⑦,⑧	The signatures of the current chairman and director.

SYMBOL ①

CERTIFICATE OF AUTHORIZATION

This certificate accredits the named company as authorized to use the indicated symbol of the American Society of Mechanical Engineers (ASME) for the scope of activity shown below in accordance with the applicable rules of the ASME Boiler and Pressure Vessel Code. The use of the Code symbol and the authority granted by this Certificate of Authorization are subject to the provisions of the agreement set forth in the application. Any construction stamped with this symbol shall have been built strictly in accordance with the provisions of the ASME Boiler and Pressure Vessel Code.

SAMPLE

COMPANY ②

SCOPE ③

AUTHORIZED ④

EXPIRES ⑤

CERTIFICATE NUMBER ⑥

⑦

CHAIRMAN OF THE BOILER
AND PRESSURE VESSEL COMMITTEE

⑧

DIRECTOR, ASME ACCREDITATION
AND CERTIFICATION

The American Society of Mechanical Engineers

FIG. DD-1 SAMPLE CERTIFICATE OF AUTHORIZATION

A05

NONMANDATORY APPENDIX EE
HALF-PIPE JACKETS

EE-1 GENERAL

The calculation procedure in this Appendix shall be used only if both of the following conditions apply.

(a) There is positive pressure inside the shell or head.

(b) There is positive pressure inside the half-pipe jacket.

EE-2 HALF-PIPE JACKETS

The maximum permissible pressure P' in half-pipe jackets shall be determined from the following formula:

$$P' = F/K \quad (1)$$

where

P' = permissible jacket pressure, psi
F = $1.5S - S'$
(F shall not exceed 1.5 S)
S = maximum allowable tensile stress at design temperature of shell or head material, psi
S' = actual longitudinal tensile stress in shell or head due to internal pressure and other axial forces, psi. When axial forces are negligible, S' shall be taken as $PR/2t$. When the combination of axial forces and pressure stress ($PR/2t$) is such that S' would be a negative number, then S' shall be taken as zero.
K = factor obtained from Fig. EE-1, EE-2, or EE-3
P = internal design pressure (see UG-21) in vessel, psi
R = inside shell or head radius, in.
D = $2R$

The minimum thickness of a half-pipe jacket, when the thickness does not exceed one-half of the inside pipe radius or P does not exceed $0.385S_1$, is given by

$$T = \frac{P_1 r}{0.85S_1 - 0.6P_1} \quad (2)$$

where

T = minimum thickness of half-pipe jacket, in.
r = inside radius of jacket defined in Fig. EE-4, in.
S_1 = allowable tensile stress of jacket material at design temperature, psi
P_1 = design pressure in jacket, psi. (P_1 shall not exceed P'.)

The fillet weld attaching the half-pipe jacket to the vessel shall have a throat thickness not less than the smaller of the jacket or shell thickness. Through thickness jacket welds with a fillet shall be considered when the jacket is in cyclic service.

EE-3 JACKETS WITH OTHER GEOMETRIES

For other jacket geometries such as shown in Fig. EE-5, the permissible pressure P' may be obtained from the rules of UG-47 for stayed construction or 9-5 for jacketed vessels.

Example

What is the required thickness of a cylindrical shell subjected to an inside pressure of 190 psi and a half-pipe jacket pressure of 300 psi? The jacket is in noncyclic service. Let

I.D. of shell = 40 in.
allowable stress of shell = 16,000 psi
joint efficiency of shell = 1.0
half-pipe jacket is NPS 3
allowable stress of jacket material = 12,000 psi
jacket girth welds are not radiographed
corrosion allowance = 0

SOLUTION: The required thickness of the shell due to internal pressure is calculated from Eq. (1) of UG-27 as

$$t = \frac{PR}{SE - 0.6P}$$

$$= \frac{190 \times 20}{16{,}000 \times 1.0 - 0.6 \times 190}$$

$$= 0.24 \text{ in.}$$

(e) Note that in the above equation, it is necessary that the pressure, load, and length dimensions be consistent, because quantities cannot be added unless they have the same units. Although the first part of the equation is similar to the first example, where the length and pressure units could be in different systems, the second example requires that if the pressure and stress units are in pounds per square inch, the load must be in pounds and the radius and thickness must be in inches. Note that the load could be in kips and the pressure in ksi. This is why we should permit any consistent system of units to be used. However, the equations should be checked only for the "standard" units.

(f) When the equation is converted to SI units,

$$S_t(\text{MPa}) = \frac{P(\text{MPa})r(\text{mm})}{2t(\text{mm})} + \frac{L(\text{N})}{2\pi r(\text{mm})t(\text{mm})}$$

Note that 1 MPa = 1 N/mm^2, so

$$S_t\left[\frac{\text{N}}{(\text{mm})(\text{mm})}\right] = \frac{P\left[\frac{\text{N}}{(\text{mm})(\text{mm})}\right]r(\text{mm})}{2t(\text{mm})} + \frac{L(\text{N})}{2\pi r(\text{mm})t(\text{mm})}$$

which reduces to

$$S_t\left[\frac{\text{N}}{(\text{mm})(\text{mm})}\right] = \frac{P(\text{N})r(\text{mm})}{(\text{mm})(\text{mm})2t(\text{mm})} + \frac{L(\text{N})}{2\pi r(\text{mm})t(\text{mm})}$$

(g) Therefore, the units in the above equation are consistent. However, this is not always the case. For example, the bolted joint design rules define an effective gasket seating width as a function of the actual width using an equation of the form below.

(1) Equation and Nomenclature

$$b_e = \sqrt{b_a}$$

where

b_e = effective gasket seating width
b_a = actual gasket seating width

(2) Dimensional Analysis

$$b_e(\text{inches}) = \sqrt{b_a(\text{inches})}$$

(h) Obviously, the equation above is not dimensionally consistent; therefore, a constant is needed if it is to be used with SI units. The constant can be calculated by converting the SI unit (mm) to the U.S. Customary unit (in.) for the calculation, then converting back to get the result in mm as follows:

$$b_e(\text{mm}) = 25.4(\text{mm/inch})\sqrt{\frac{b_a(\text{mm})}{25.4(\text{mm/inch})}}$$

which can be reduced to

$$b_e(\text{mm}) = 5.04\sqrt{b_a(\text{mm})}$$

GG-5 SOFT CONVERSION FACTORS

The following table of "soft" conversion factors is provided for convenience. Multiply the U.S. Customary value by the factor given to obtain the SI value. Similarly, divide the SI value by the factor given to obtain the U.S. Customary value. In most cases it is appropriate to round the answer to three significant figures.

U.S. Customary	SI	Factor	Notes
in.	mm	25.4	...
ft	m	0.3048	...
in.^{2}	mm^2	645.16	...
ft^2	m^2	0.09290304	...
in.^{3}	mm^3	16,387.064	...
ft^3	m^3	0.02831685	...
U.S. gal	m^3	0.003785412	...
U.S. gal	liters	3.785412	...
psi	MPa	0.0068948	Used exclusively in equations
psi	kPa	6.894757	Used only in text and for nameplate
ft-lb	J	1.355818	...
°F	°C	5/9 × (°F − 32)	Not for temperature difference
°F	°C	5/9 × °F	For temperature differences only
R	K	5/9	Absolute temperature
lbm	kg	0.4535924	...
lbf	N	4.448222	...
in.-lb	N·mm	112.98484	Use exclusively in equations
ft-lb	N·m	1.3558181	Use only in text
ksi$\sqrt{\text{in.}}$	MPa$\sqrt{\text{m}}$	1.0988434	...
Btu/hr	W	0.2928104	Use for boiler rating and heat transfer
lb/ft^3	kg/m^3	16.018463	...

GG-6 SPECIAL REQUIREMENTS FOR POSTWELD HEAT TREAT TIMES

In general, PWHT times in hours per inch of thickness were converted to minutes per millimeter of thickness as follows:

(a) 1 hr/in. = 2 min/mm. Although this results in heat treatment for only 51 min for a 25.4 mm thick section, this is considered to be within the range of intended precision of the U.S. Customary requirement.

(b) 15 min/in. = 0.5 min/mm. Although converting and rounding would give 0.6 min/mm, it was necessary to use 0.5 to be consistent with the rounding for 1 hr/in.

GG-7 NOTES ON CONVERSIONS IN SECTION II, PARTS A, B, AND C

The conversions provided by ASTM and AWS were used for consistency with those documents.

A05

NONMANDATORY APPENDIX HH
TUBE EXPANDING PROCEDURES AND QUALIFICATION

HH-1 GENERAL

This Appendix establishes requirements for procedure specifications for expanded tube-to-tubesheet joints

(a) designed using the test joint efficiencies, f_r (test), listed in Table A-2 of Appendix A;

(b) designed using the no-test joint efficiencies, f_r (no test), listed in Table A-2 of Appendix A; and

(c) used in tubesheets designed in accordance with the rules of Part UHX when the effective tube hole diameter depends upon the expanded depth of the tube ($\rho > 0$).

Leak tightness of expanded joints is not a consideration in Part UHX and Appendix A, and is therefore not considered in Appendix HH.

HH-2 SCOPE

The rules in this Appendix apply to preparation and qualification of tube expanding procedures for the types of expanding processes permitted in this Appendix.

HH-3 TERMS AND DEFINITIONS

Some of the more common terms relating to tube expanding are as follows:

explosive expanding — uniform pressure expanding in which the force of an explosion is applied to the length or lengths of tube to be expanded.

groove —an annular machined depression in a tube hole.

hybrid expanding — hydroexpanding or explosive expanding to a percent wall reduction that ensures maintenance of tube-hole contact, followed by roller expanding to the final percent wall reduction.

hydroexpanding — uniform pressure expanding in which hydraulic pressure is applied to the length or lengths of tube to be expanded.

near contact kinetic expanding — see *explosive expanding.*

parallel tube roller — tube rolling tool in which the taper angle of the mandrel and the taper angle of the hardened pins are approximately equal and opposite, thereby causing the pins to bear uniformly on the tube surface.

percent wall reduction — reduction in tube wall thickness due to expanding, expressed as a percent of the specified thickness of the tube.

progressive rolling — step rolling in which the first step begins at or near the front face of the tubesheet and successive steps progress toward the rear face.

prosser — see *segmental expander.*

prossering — expanding tubes with a segmental expander.

regressive rolling — step rolling in which the first step begins at or near the rear face of the tubesheet and successive steps progress toward the front face.

roller expanding — expanding by inserting a tube rolling tool into a tube aligned with a tube hole.

segmental expander — thick-walled, flanged cylinder with a tapered interior wall, cut axially into segments and held together by bands. A mandrel with a reverse taper to the taper of the interior of the cylinder is thrust forward, forcing the segments outward to contact and expand the tube. The flange bears against the tube end or tubesheet face to maintain the position of the expander relative to the tube.

self-feeding rolling tool — tube rolling tool with the slots in the cage at an angle with the tool centerline such that rotating the mandrel in a clockwise direction causes the tool to feed into the tube and reversing the direction causes it to back out.

serrations —machined, parallel, shallow, narrow grooves in a tube hole or on the exterior of a tube end.

step rolling — tube rolling in which successive, overlapping applications of the tube roller are applied in order to roll tubes into tubesheets thicker than approximately 2 in. (50 mm).

torque control — an electronic or hydraulic control or cam-operated reversing mechanism that causes a rolling tool driver to reverse direction when a preset level of torque is reached.

transition zone — region of an expanded joint in which the expanded part of the tube transitions to the unexpanded part.

tube end enhancement — treatment of the O.D. of the part of the tube to be expanded into a tubesheet hole to increase the strength of the expanded tube-to-tubesheet joint.

tube expanding — process of expanding a tube into contact with the surrounding metal of the tube hole and subsequently expanding the tube to a fully plastic state, and expanding the surrounding metal elastically or plastically in an inner zone and elastically farther out, followed by relaxation of the tube and surrounding metal when the expanding tool is withdrawn, thereby creating residual interface pressure between the tube and hole.

tube hole enhancement — treatment of the tube hole to increase the strength of an expanded tube-to-tubesheet joint. Enhancements may be by means of grooves or serrations.

tube rolling tool — tool consisting of a slotted cylindrical cage that holds hardened pins into which a hardened tapered mandrel is thrust and rotated, thereby expanding the tube.

two-stage expanding — explosive, hydraulic, or roller expanding in which in the first stage all the tubes are expanded into firm contact with the holes, followed by a second stage of expanding to the final specified percent wall reduction.

uniform pressure expanding — tube expanding by applying unit force equally on the surfaces of the length or lengths of tube to be expanded.

HH-4 TUBE EXPANDING PROCEDURE SPECIFICATION (TEPS)

A Tube Expanding Procedure Specification (TEPS) is a written document that provides the tube expander operator with instructions for making production tube-to-tubesheet joint expansions in accordance with Code requirements (see Form QEXP-1). The Manufacturer is responsible to ensure that the production tube expanding is performed in accordance with a qualified TEPS that meets the requirements of HH-7.

The TEPS shall specify the variables (including ranges, if any) under which tube expanding must be performed. These variables include the tube and tubesheet metal properties that shall include yield stresses and moduli of elasticity. The TEPS shall specify ratios of tube-to-tubesheet yield stresses that are permitted, the range of tube wall thicknesses, expanded depth of tubes relative to the tubesheet thickness, range of acceptable percent wall reduction, etc.

The TEPS shall address, as a minimum, the specific variables, both essential and nonessential, as provided in HH-7.1 for each process to be used in production expanding.

HH-5 TUBE EXPANDING PROCEDURE QUALIFICATION

The purpose for qualifying a TEPS is to demonstrate that the expanded joint proposed for construction will be suitable for its intended application. The tube expanding procedure qualification establishes the suitability of the expanded joint, not the skill of the tube expander operator.

HH-5.1 No Test Qualification

Tube expanding procedures not required to be qualified by HH-5.2 may be used for expanded tube joints meeting HH-1(b) or (c) without a qualification test, provided the Manufacturer maintains records indicating that the tube joints expanded using the tube expanding procedures were successfully tested in accordance with UG-99 or UG-100.

HH-5.2 Test Qualification

Tube expanding procedures to be used for expanded tube joints meeting HH-1(a) shall be qualified by the Manufacturer in accordance with the requirements of A-1 and A-3, and the qualification shall be documented in accordance with HH-5.3.

HH-5.3 Tube Expanding Procedure Qualification Record (TEPQR) for Test Joint Efficiencies

The Tube Expanding Procedure Qualification Record (TEPQR) documents what occurred during expanding the

test specimen and the results of the testing in accordance with the requirements of A-1 and A-3 of Appendix A. In addition, the TEPQR shall document the essential variables and other specific information identified in HH-7 for each process used.

HH-6 TUBE EXPANDING PERFORMANCE QUALIFICATION (TEPQ)

The purpose of performing a TEPQ is to demonstrate that the operator of the equipment is qualified to make an expanded joint of the type specified in the TEPS.

HH-6.1 No Test Qualification

A tube expander operator not required to be qualified by HH-6.2 is qualified to expand tube joints meeting HH-1(b) or (c) provided the Manufacturer maintains records indicating that tube joints expanded by the operator were successfully tested in accordance with UG-99 or UG-100.

HH-6.2 Test Qualification

A tube expander operator is qualified to expand tube joints using tube expanding procedures that have been qualified in accordance with HH-5.2, provided the operator, under the direction of the Manufacturer, has prepared at least one specimen that meets the requirements of A-1 and A-3 for the applicable procedure. Such specimens shall qualify the operator to apply tube expanding procedures as follows:

(a) tubes that have identical yield stresses and elastic moduli with each other, be expanded into tubesheets that have identical yield stresses and elastic moduli with each other.

(b) the ratios of tube-to-tube plate yield stresses do not deviate from those of the test specimen by more than ±5%.

HH-7 TUBE EXPANDING VARIABLES

Variables are subdivided into essential variables that apply to all expanding processes, and essential and nonessential variables that apply to each expanding process. Essential variables are those in which a change, as described in specific variables, is considered to affect the mechanical properties of the expanded joint, and shall require requalification of the TEPS. Nonessential variables are those that may be changed at the Manufacturer's discretion and are included in the TEPS for instruction purposes.

HH-7.1 Essential Variables for All Expanding Processes

The following essential variables shall be specified for all expanding processes. The Manufacturer may define additional essential variables.

(a) method of measuring and controlling tube hole diameter

(b) limit of percentage of tube holes that deviate from the specified diameter tolerance and maximum tolerance of hole-diameter deviation

(c) limiting ratio of tube diameter to tube wall thickness

(d) minimum ratio of tubesheet thickness to tube diameter

(e) minimum ratio of drilling pitch to tube diameter

(f) details of tube and/or tube hole treatments for joint strength enhancement, including surface finish of tube holes, tube-hole and tube end serrations, and tube hole annular grooves

(g) tube-to-hole diametral clearance prior to expanding (fit)

(h) range of modulus of elasticity of tube material

(i) range of modulus of elasticity of tubesheet material

(j) range of specified minimum tube yield stresses listed in Section II

(k) maximum permissible increase of tube yield stress above the minimum yield stress specified in Section II

(l) specified minimum tubesheet yield stress listed in Section II

(m) minimum ratio of tubesheet to tube yield stress [1]

(n) minimum and maximum percent wall reduction[2]

(o) for welded tube joints where tubes are to be expanded after welding, the method of fixing tube position before welding, the setback from the front face of the tubesheet to onset of expanding, the treatment of weld and tube-end shrinkage before inserting the expanding mandrel, and any post-expansion heat treatment

(p) for tubes to be expanded before welding, the procedure to be used to remove all traces of lubricants and moisture from the surfaces to be welded

(q) distance from front face of tubesheet to commencement of expanding

[1] Manufacturer's are cautioned to calculate the minimum ratio based upon mill test values of the tube and tubesheet.

[2] The Manufacturer may correlate rolling torque, hydraulic expanding pressure, or explosive charge with shear load tests. For explosive expanding, the Manufacturer may correlate interference of fit.

(r) distance from rear face of tubesheet to end of expanding

(s) unrolled length between front and rear expansion

(t) lubrication and cooling of the expanding mandrel

(u) measured actual amount of expansion

HH-7.2 Essential Variables for Roller Expanding

The following are essential variables for roller expanding:

(a) tool driver type (electrical, air, hydraulic), power or torque rating

(b) number and length of overlapping steps

(c) direction of rolling (progressive or regressive)

(d) speed of rotation

(e) tool type (parallel or nonparallel)

(f) cage and pin length

(g) number of pins in the cage

(h) cage slot angle or tool manufacturer's tool number

(i) frequency of verifying percent wall reduction

(j) for tubes to be expanded after welding, setback of onset of expanding treatment of weld and tube-end shrinkage before inserting the expanding mandrel

HH-7.3 Essential Variables for Hydraulic Expanding

The following are essential variables for hydraulic expanding:

(a) hydraulic mandrel details or mandrel manufacturer's mandrel number(s)

(b) precision of pressure control

(c) number of applications of hydraulic pressure

HH-7.4 Essential Variables for Explosive Expanding

The following are essential variables for explosive expanding:

(a) number of applications of explosive force

(b) number of tubes to be simultaneously expanded

(c) tube supports in surrounding holes

(d) post-expanding tube-end cleaning

(e) size of the explosive load

(f) buffer material

(g) outside diameter of the buffer material

(h) inside diameter of the buffer material

(i) theoretical expanded O.D. of the tube based on original cross-sectional area and expanded I.D. of the tube as compared to the tubesheet hole diameter

HH-7.5 Essential Variables for Hybrid Expanding

The essential variables for hybrid expanding are the variables listed in HH-7.4 for the initial explosive expanding or HH-7.3 for the initial hydraulic expanding and the following:

(a) the range of percent wall reduction to be achieved by the inital expanding

(b) the range of total percent wall reduction to be achieved by the initial expanding and final rolling

HH-7.6 Nonessential Variables

The Manufacturer shall specify nonessential variables for each process.

FORM QEXP-1 TUBE EXPANDING PROCEDURE SPECIFICATION (TEPS)

Company Name:				By:	
Tube Expanding Procedure Specification No.		Date		Supporting TEPQR No.(s)	
Revision No.		Date			
Expanding Process(es) (Rolling, Hydroexpanding, Explosive Expanding, Hybrid Expanding)			Driver Types (Electric, Air, Hydraulic, Hydroexpanded, Explosive)		

JOINTS

Measurement and Control of Tube Hole		Tube Pitch	
Tube Hole Diameter and Tolerance		Maximum Tube to Hole Clearance Before Expanding	
Ratio Tube Diameter/Tube Wall Thickness		Minimum Ratio Drilling Pitch/Tube Diameter	
Maximum % Wall Reduction		Minimum % Wall Reduction	
Maximum Permissible Deviation from Specified Hole Diameter		Maximum Permissible % of Holes that Deviate	
Details of Tube End Hole Enhancement		Minimum Ratio Tubesheet Thickness/Tube Diameter	
Method of Fixing Tubes in Position		Length of Expansion	
Setback from Front Tubesheet Face Before Start of Expanding		Setback from Rear Tubesheet Face after Expanding	
Method of Removing Weld Droop		Method of Tube End and Hole Cleaning	
Other Details:			

EXPANDING EQUIPMENT

Manufacturer(s), Model No.(s), Range of Tube Diameters and Thicknesses, Maximum Torque Output or Pressure.

Expanding Tool Model and Description			
Expanded Length per Application of Expanding Mandrel		No. of Applications/ Expanded Length	
Torque or Pressure Calibration System and Frequency		Explosive Charge and No.(s) of Applications	

PROPERTIES

Range of Tube Elastic Modulus		Range of Plate Elastic Modulus		
Range of Tube Yield Stress (Mill Test Report Values)	Min.		Max.	
Range of Tubesheet Yield Stress (Mill Test Report Values)	Min.		Max.	
Minimum Tubesheet Yield Stress/Tube Yield Stress Note: Values below 0.6 require shear load testing				

TUBES

Diameter Range		Thickness Range		Minimum Ratio Tube Diameter/Thickness	
Material Specifications					

TUBESHEETS

Thickness Range		Maximum Ratio of Tubesheet Thickness to Tube Diameter	
Material Specifications			

REMARKS

QEXP-1 TUBE EXPANDING PROCEDURE SPECIFICATION (TEPS)
Fill Out Information Form

1	Company Name: (1)				By: (2)		
2	Tube Expanding Procedure Specification No.	(3)		Date (4)		Supporting TEPQR No.(s)	(5)
3	Revision No.	(6)		Date (7)			
4	Expanding Process(es)	(8)		Driver Type	(9)		
JOINTS							
5	Measurement and Control of Tube Hole	(10) NOTE: All equipment used for measurements shall be calibrated.					
6	Tube Hole Diameter and Tolerance	(11)		Maximum Tube to Hole Clearance Before Expanding	(12)		
7	Ratio Tube Diameter/Tube Wall Thickness	(13)		Minimum Ratio Drilling Pitch/Tube Diameter	(14)		
8	Maximum % Wall Reduction	(15)		Minimum % Wall Reduction	(16)		
9	Maximum Permissible Deviation from Specified Hole Diameter	(17)		Maximum Permissible % of Holes that Deviate	(18)		
10	Details of Tube End Hole Enhancement and/or Tube End Enhancement	(19)		Minimum Ratio Tubesheet Thickness/Tube Diameter	(20)		
11	Method of Fixing Tubes in Position	(21)		Length of Expansion	(22)		
12	Setback from Front Tubesheet Face Before Start of Expanding	(23)		Setback from Rear Tubesheet Face After Expanding	(24)		
13	Method of Removing Weld Droop	(25)		Method of Tube End and Hole Cleaning	(26)		
14	Other Joint Details: (27)						
EXPANDING EQUIPMENT							
15	Manufacturer(s), Model No.(s), Range of Tube Diameters and Thicknesses, Maximum Torque Output or Pressure. (28)						
16	Expanding Tool Model and Description	(29)					
17	Expanded Length per Application of Expanding Mandrel	(30)		No. of Applications/ Expanded Length	(31)		
18	Torque or Pressure Calibration System and Frequency	(32)		Explosive Charge and No.(s) of Applications	(33)		
PROPERTIES							
19	Range of Tube Elastic Modulus (34)			Range of Plate Elastic Modulus	(35)		
20	Range of Tube Yield Stress	Min. (36)		Max. (37)			
21	Range of Tubesheet Yield Stress	Min. (38)		Max. (39)			
22	Minimum Tubesheet Yield Stress/Tube Yield Stress	(40)					
TUBES							
23	Diameter Range	(41)		Thickness Range	(42)	Maximum Ratio Tube Diameter/Thickness	(43)
24	Material Specifications	(44)					
TUBESHEETS							
25	Thickness Range	(45)		Minimum Ratio of Tubesheet Thickness to Tube Diameter	(46)		
26	Material Specifications	(47)					
27	**REMARKS:**	(48) This form is provided to record job-specific information regarding tube expansion for: (49), Bundle set-up, cleanliness, and sequence of expansion operation and (50) attachments/ supplements (see Fig. QEXP-1).					

TABLE QEXP-1
INSTRUCTIONS FOR FILLING OUT TEPS FORM

Note No.	Explanation of Information to Be Provided
(1)	Show Manufacturer's name and address.
(2)	Show TEPS author's names.
(3)	Show Manufacturer's TEPS number.
(4)	Show applicable date of TEPS.
(5)	Insert number of supporting Tube Expanding Procedure Qualification Record (TEPQR).
(6)	Show revision number if any.
(7)	Insert date of revision if any.
(8)	Describe expanding process as torque-controlled expanding, hydraulic expanding, or explosive expanding. If hybrid expanding is to be performed, describe sequence, e.g., "hybrid expanding (hydraulic expanding to 3% wall reduction followed by torque-controlled roller expanding to 6% to 8% total wall reduction)."
(9)	Describe as hydraulic, explosive, air-driven torque controlled, electric torque controlled, or hydraulic torque controlled drive. If hybrid expanded, describe as hydraulic or explosive expanded + torque controlled air, torque controlled electric, or torque controlled hydraulic torque controlled drive.
(10)	Describe measuring equipment, e.g., "go–no/go gage," "internal 3 point micrometer," or similar measuring device.
(11)	Show hole size and plus/minus tolerance.
(12)	Show diametrical clearance, e.g., 0.014 in. (for minimum of 96%) and 0.022 in. (for maximum of 4%).
(13)	Minimum and maximum ratio of tube O.D. to tube wall (O.D./t) for this TEPS.
(14)	Fill in nominal ratio of drilling pitch to tube diameter.
(15)	Fill in maximum percent wall reduction to which the TEPS applies.
(16)	Fill in minimum percent wall reduction to which the TEPS applies.
(17)	Enter maximum permissible deviation of hole from specified drilling size and tolerance, e.g., 0.01 in.
(18)	Enter maximum percent of holes that may deviate by the amount shown in (17).
(19)	Describe enhancements for joint strength, e.g., "(2)$\frac{1}{8}$ in. wide × $\frac{1}{64}$ in. grooves set 1 in. from inlet face with $\frac{1}{2}$ in. land between".
(20)	Fill in the maximum and minimum ratios of tubesheet thickness to tube diameter.
(21)	Describe how the tube will be fixed in position before expanding, e.g., "nose roll" or "hydraulically preset."
(22)	Fill in the length of tube end to be expanded into the hole, e.g., "tubesheet thickness - $\frac{3}{16}$ in." If hybrid expansion is to be performed, show length of expansion for each step.
(23)	Fill in the distance from the front face of the tubesheet to the point where expanding will begin.
(24)	Fill in the distance from the rear face of the tubesheet to the point where expanding will end.
(25)	If tube is welded to front face of tubesheet, describe how any weld metal that impedes access of the expanding tool(s) will be removed.

TABLE QEXP-1 (CONT'D)
INSTRUCTIONS FOR FILLING OUT TEPS FORM

Note No.	Explanation of Information to Be Provided
(26)	Describe how tube ends will be cleaned before expanding, e.g., "solvent wash and clean with felt plugs".
(27)	Describe any other pertinent details, e.g., "tubes to be welded to front face of tubesheet before expanding".
(28)	Show expanding tool manufacturer, e.g., name hydraulic expanding system or model no.,"range of tube diameters ½ in. to 2 in., range of thicknesses 0.028 in. to 0.0109 in., maximum hydraulic pressure 60,000 psi".
(29)	Fill in roller expanding tool or hydraulic mandrel number. If explosive expanding, fill in drawing number that describes the charges. If hybrid expanding, show this information for Steps 1 and 2.
(30)	Describe expanded length per application, e.g., "2 in. (roller length)".
(31)	Show number of applications of expanding tool, e.g., "two applications required for roll depth". If hydraulic or explosive expanding, show length of expansion per application of hydraulic expanding pressure or explosive charge, e.g., "tubesheet thickness - ⅝ in".
(32)	Describe the system used to calibrate and control the rolling torque and frequency of verification. Alternatively, describe the use of production control holes and expansions.
(33)	Describe the explosive charge and whether it will be single- or two-stage explosive expansion.
(34)	List the minimum and maximum elastic modulus of the tubes for this TEPS.
(35)	List the minimum and maximum elastic modulus of the tubesheet(s) for this TEPS.
(36)	List minimum permissible tube yield stress.
(37)	List maximum permissible tube yield stress.
(38)	List minimum permissible tubesheet yield stress.
(39)	List maximum permissible tubesheet yield stress.
(40)	Show the minimum ratio of tubesheet to tube yield stresses.
(41)	List the range of tube diameters to which this TEPS applies.
(42)	List the range of tube thicknesses to which this TEPS applies.
(43)	Show the maximum ratio of tube diameter to thickness to which this TEPS applies.
(44)	Show the tube specification number, e.g., "SA-688 TP304N".
(45)	Show the range of tubesheet thicknesses to which this TEPS applies, e.g., 1 in. to 5 in.
(46)	Show the minimum ratio of tubesheet thickness to tube diameter to which this TEPS applies.
(47)	Show the tubesheet material specification numbers, e.g., "SA-350 LF2."
(48)	Describe pertinent job-specific information.
(49)	Describe such things as bundle setup and sequence of expansion operation. Refer to drawing numbers and manufacturer's standards as appropriate.
(50)	Refer to any attachment or supplement to the TEPS form.

FORM QEXP-2 SUGGESTED FORMAT FOR TUBE-TO-TUBESHEET EXPANDING PROCEDURE QUALIFICATION RECORD FOR TEST QUALIFICATION (TEPQR)

Company name _____

Procedure Qualification Record no. _____ Date _____

TEPS no. _____

Expanding process(es) _____
(Rolling, hydroexpanding, explosive expanding, hybrid expanding)

Driver types _____
(Electric, air-driven, hydraulic, other)

Expanded tube length _____
(If there is a gap in the expanded zone, record the total expanded length)

Tube pitch _____

Joints (HH-7)

Sketch of Test Array

Tubesheet Material(s)

Material spec. _____ Type or grade _____

Diameter and thickness of test specimen _____ Hole diameter and pitch arrangement _____

No. and location of joints to be tested _____

No. and description of annular grooves _____

Hole surface finish _____

Yield stress (from mill test report) _____

Other _____

Testing Apparatus _____
(Manufacturer, type, calibration date)

Rate of loading to avoid impact _____
[Maximum $^1/_2$ in. (13 mm) per minute]

Tube Material(s) _____

Material spec. _____ Type or grade _____

Diameter and thickness (min./avg.) _____

Yield stress (from mill test report) _____

Other _____

FORM QEXP-2 (Back)

Shear Load Test (See Appendix A, Fig. A-3).

Tube No.	Position in Array	Diameter	Thickness	Cross-Sectional Area	Test Temp.	L_1 (test)	Manner of Failure

Tube No.	Position in Array	Diameter	Thickness	Cross-Sectional Area	Ambient Temp.	L_2 (test)	Manner of Failure

Mean value of L_1 (test) _____ Mean value of L_2 (test) _____

Standard deviation _____ Standard deviation _____ Satisfactory (see Appendix A, A-5) _____

f_r (test) (see Appendix A, A-4) _____

Operator's name _____ Clock no. _____

Manufacturer _____

Date _____ By _____

Remarks:

04

INDEX

Abrasion, allowance for, UG-25, UG-26
Accessibility, pressure vessels, M-2
Access openings, UG-46
Allowance for corrosion, erosion, or abrasion, UG-25, UG-26, UB-13, UCS-25, UCL-25
Applied lining, tightness, UCL-51
Approval of new materials, UG-4, App. B
Articles in Section V
  Article 1, T-150, 6-1, 8-1, 12-2
  Article 2, UW-51
  Article 5, 12-1
  Article 6, 8-1
  Article 7, 6-1
Attachments
  lugs and fitting, UG-82
  lugs for platforms, ladders, etc., UG-55
  nonpressure parts, UW-28, UHT-85
  nozzles, UW-16
  pipe and nozzle necks to vessel walls, UG-43, UHT-18
  stiffening rings to shell, UG-30, UHT-28, UHT-30

Backing strip, Table UW-12, UW-16, UW-35
Bending stress, welded joints, UW-9
Bend test, UHA-52
Blind flanges, UG-34
Bolted flange connections, UG-44, Apps. 2 and Y
  bolt loads, 2-5
  bolt stresses, App. S
  design of, Apps. 2, S, and Y
  flange moments, 2-6
  flange stresses, 2-7, App. S
  materials, UG-4 to UG-13, UCD-12, 2-2
  studs, 2-2
  tightness of, App. S
  types of attachment, 2-4
Bolts, UG-12, UCS-10, UNF-12, UCI-12, UCD-12, 2-2, App. S
Braced and stayed surfaces, UG-47
Brazed connections for nozzles, UB-17 to UB-19
Brazed joints, efficiency of, UB-14
  maximum service temperature, UB-12
  strength of, UB-10
Brazing, cleaning of braced surfaces, UB-34
  fabrication by, UB-1, UB-30 to UB-37
  filler metal, UB-6, UB-15
  fluxes, UB-7
  heads into shells, UB-16
  operating temperature, UB-2
Buttstraps, curvature, UB-33
  forming ends of, UG-79
  thickness and corrosion allowance, UB-13
  welding ends of, UB-33

Carbon in material for welding, UF-5, UCS-5
Cast ductile iron vessels, design, UCD-16
  pressure–temperature limitations, UCD-3
  service restrictions, UCD-2
Castings
  carbon steel, UCS-8
  defects, UG-24
  impact test, UG-84, UHT-6
  inspection, UG-24
  quality factor, UG-24
  specifications, UG-7, UCS-8, UNF-8, UCD-5
Cast iron circular dished heads, UCI-35
Cast iron standard parts, small, UG-11
Cast iron pipe fittings, UCI-3
Cast iron vessels, corners and fillets, UCI-37
  head design, UCI-32, UCI-33
  hydrostatic test, UCI-99
  nozzles and fittings, UCI-36
  pressure–temperature limitations, UCI-3
Certificate of Authorization for Code Symbol Stamp, UG-116
Certification of material, UG-93
Certification of Nondestructive Personnel
  magnetic particle examination, 6-2
  liquid penetrant examination, 8-2
  radiographic examination, UW-51
  ultrasonic examination, 12-2
Chip marks on integrally forged vessels, UF-32
Circumferential joints, alignment tolerance, UHT-20
  assembling, UW-9, UB-16
  brazing, UB-16
  vessels subjected to external pressure, UG-28
Clad material, inserted strips, UCL-33
  examination, UCL-36
Clad plate, UCL-11

ASME Boiler and Pressure Vessel Code
SECTION VIII-1

INTERPRETATIONS
Volume 55

Beginning with the 2004 Edition, Interpretations of the Code will be distributed annually in July with the issuance of the edition and subsequent addenda. Interpretations previously distributed in January will be posted in January at www.cstools.asme.org/interpretations and included in the July distribution. Interpretations of Section III, Divisions 1 and 2, are part of the update service to Section III, Subsection NCA.

Interpretations Volumes 48 through 53 were included with the update service to the 2001 Edition of the Code; Volume 54 is the first Interpretations volume to be included with the update service to the 2004 Edition.

Section	Vol. 54	Vol. 55	Vol. 56
I	7/04	7/05	
II-A	7/04	7/05	
II-B	7/04	...	
II-C	...	...	
II-D (Customary)	...	...	
II-D (Metric)	...	...	
III-NCA	7/04	7/05	
III-3	...	...	
IV	...	7/05	
V	7/04	7/05	
VI	...	...	
VII	...	...	
VIII-1	7/04	7/05	
VIII-2	7/04	7/05	
VIII-3	...	7/05	
IX	7/04	7/05	
X	7/04	7/05	
XI	7/04	7/05	
XII	...	...	

Copyright © 2005
THE AMERICAN SOCIETY OF MECHANICAL ENGINEERS
All rights reserved

INTERPRETATIONS
VOLUME 55 — SECTION VIII-1

Replies to Technical Inquiries
January 1, 2004 through December 31, 2004

FOREWORD

General Information

This publication includes all written interpretations issued between the indicated dates by the ASME Staff on behalf of the ASME Boiler and Pressure Vessel Committee in response to inquiries concerning interpretations of the ASME Boiler and Pressure Vessel Code. A contents is also included which lists subjects specific to the interpretations covered in the individual volume.

These interpretations are taken verbatim from the original letters, except for a few typographical and editorial corrections made for the purpose of improved clarity. In some instances, a review of the interpretation revealed a need for corrections of a technical nature. In these cases, a revised interpretation is presented bearing the original interpretation number with the suffix R and the original file number with an asterisk. Following these revised interpretations, new interpretations and revisions to them issued during the indicated dates are assigned interpretation numbers in chronological order. Interpretations applying to more than one Code Section appear with the interpretations for each affected Section.

ASME procedures provide for reconsideration of these interpretations when or if additional information is available which the inquirer believes might affect the interpretation. Further, persons aggrieved by an interpretation may appeal to the cognizant ASME committee or subcommittee. As stated in the Statement of Policy in the Code documents, ASME does not "approve," "certify," "rate," or "endorse" any item, construction, proprietary device, or activity.

An interpretation applies either to the Edition and Addenda in effect on the date of issuance of the interpretation or the Edition and Addenda stated in the interpretation. Subsequent revisions to the Code may supersede the interpretation.

For detailed instructions on preparation of technical inquiries to the ASME Boiler and Pressure Vessel Committee, refer to Appendix 16.

Subject and Numerical Indexes

Subject and numerical indexes have been prepared to assist the user in locating interpretations by subject matter or by location in the Code. They cover interpretations issued from Volume 12 up to and including the present volume and will be updated with each volume.

SECTION VIII-1

Subject	Interpretation	File No.
Appendix 1, 1-4(f)(1)(e), Internal Pressure, Formed Heads	VIII-1-04-25	BC04-156
Appendix W, Data Report Forms U-1 and U-1A	VIII-1-04-39	BC02-2682
Fig. UW-13.2 and Fig. 2-4	VIII-1-04-42	BC04-1015
Part UHX	VIII-1-04-41	BC04-864
Table UW-12	VIII-1-01-154	BC02-3288
U-1(c)(2)(c), Pulp Refiners	VIII-1-04-33	BC03-1277
U-1(c)(2)(h), Jacket	VIII-1-04-37	BC04-346
U-1(g)(3) and U-1(j), Steam Generator	VIII-1-04-31	BC03-775
UG-22(g), Load Impact	VIII-1-04-27	BC04-324
UG-22(i), Loads, Abnormal Pressure	VIII-1-04-29	BC04-325
UG-29(c), External Pressure	VIII-1-04-24	BC03-1845
UG-34(c)(1) and UG-44, Pressure-Temperature Ratings of Standard Blind Flanges	VIII-1-04-30	BC03-623
UG-43(d) and Fig. UG-40(a-2), Attachment of Nozzles	VIII-1-04-35	BC04-685
UG-118, Methods of Marking	VIII-1-04-32	BC03-777
UG-120(c), Partial Data Report Forms	VIII-1-04-36	BC04-231
UG-125(c)(2), UG-133(d), and UG-135(d)(1)	VIII-1-04-38	BC01-910
UG-126(a)	VIII-1-04-40	BC04-583
UG-136(c)(5) Note and UG-130, Pressure Relief Valve Machining	VIII-1-04-26	BC03-1329
UHA-51(a)(4)(a)(3), Impact Testing Specimens	VIII-1-04-34	BC04-056
UHX-13.3 and UHX-14.3, Nomenclature; UHX-10(a), Conditions of Applicability	VIII-1-04-28	BC04-043
UW-2(a)(4)	VIII-1-04-43	BC04-1043

Revision to an Interpretation Published in a Previous Volume

Interpretation: VIII-1-01-154

Subject: Section VIII, Division 1 (2001 Edition, 2002 Addenda); Table UW-12

Date Issued: June 13, 2003

File: BC02-3288

Question: In Table UW-12 of Section VIII, Division 1, Type No. (6) joint limitations are given relative to the required thickness of the components being joined, whereas in the remainder of Table UW-12 reference is made only to thickness or nominal thickness. Are the thickness limits for Type No. (6) welds based on the thickness required for pressure only?

Reply: No, all loads must be considered. See Appendix 3, 3-2.

Note: This interpretation originally appeared in Volume 53. In the Question, "normal thickness" has been corrected by errata to read "nominal thickness."

New Interpretations

Interpretation: VIII-1-04-24

Subject: Section VIII, Division 1 (2001 Edition and 2003 Addenda); UG-29(c), External Pressure

Date Issued: February 10, 2004

File: BC03-1845

Question: A pressure vessel is subjected to external pressure and utilizes internal stiffening rings that satisfy all the provisions of paras. UG-29(c)(1), (2), (3), and (4). Is it required to provide either the strut member as shown in Fig. UG-29.1 at location "D" or the external stiffener as shown in Fig. UG-29.1 at location "C"?

Reply: No.

Interpretation: VIII-1-04-25

Subject: Section VIII, Division 1 (2001 Edition and 2003 Addenda); Appendix 1, 1-4(f)(1)(e), Internal Pressure, Formed Heads

Date Issued: March 1, 2004

File: BC04-156

Question: In 1-4(f)(1)(e), shall the equation given for R_e be used for all values of ϕ ?

Reply: Yes, only the value of c is dependent on the value of ϕ.

Interpretation: VIII-1-04-26

Subject: Section VIII, Division 1 (2001 Edition and 2003 Addenda); UG-136(c)(5) Note and UG-130, Pressure Relief Valve Machining

Date Issued: March 2, 2004

File: BC03-1329

Question (1): Is it permitted by the rules of Section VIII, Division 1 for a Manufacturer of pressure relief valves, as defined in the note under UG-136(c)(5), to subcontract the machining of component parts to another organization which does not possess a Certificate of Authorization, provided the Manufacturer retains responsibility for all activities listed in the note?

Reply (1): Yes, provided the requirement of UG-136(c)(1) is met.

Question (2): Is it permitted by the rules of Section VIII, Division 1 for the subcontracted organization which machines the component parts to loosely fit together the parts solely for the purpose of shipping to the Manufacturer in possession of the Certification of Authorization?

Reply (2): Yes, provided the requirement of UG-136(c)(1) is met.

Question (3): If a Manufacturer who is in possession of a valid Certificate of Authorization receives parts, which have been loosely fit together solely for the purpose of shipping, is it required that the parts be separated prior to final assembly by the Certificate Holder so that the requirements of UG-130 are met?

Reply (3): Yes, provided the valve type is capacity-certified in accordance with the requirements of Section VIII, Division 1.

Interpretation: VIII-1-04-27

Subject: Section VIII, Division 1 (2001 Edition and 2003 Addenda); UG-22(g), Load Impact

Date Issued: March 19, 2004

File: BC04-324

Question: Paragraph UG-22(g) states that "impact reactions such as those due to fluid shock" shall be considered in the design of a vessel. Does this include the loads resulting from abrupt changes in fluid motion or direction that are typically referred to as "water hammer" or "steam slugging"?

Reply: Yes.

Interpretation: VIII-1-04-28

Subject: Section VIII, Division 1 (2001 Edition and 2003 Addenda); UHX-13.3 and UHX-14.3, Nomenclature; UHX-10(a), Conditions of Applicability

Date Issued: March 23, 2004

File: BC04-043

Question (1): In Part UHX of Section VIII, Division 1, is the rim the unperforated portion of the tubesheet from the equivalent diameter of outer tube limit circle, D_o, to the outside diameter of the tubesheet, A?

Reply (1): Yes.

Question (2): May the tubesheet design rules in Part UHX be used for a tubesheet that is not circular?

Reply (2): No. See UHX-10(a) and U-2(g).

Question (3): May the tubesheet design rules in Part UHX be used for a tubesheet that is uniformly perforated in either an equilateral triangular or square pattern within a rectangular area?

Reply (3): No. See UHX-10(a) and U-2(g).

Interpretation: VIII-1-04-29

Subject: Section VIII, Division 1 (2001 Edition and 2003 Addenda); UG-22(i), Loads, Abnormal Pressure

Date Issued: March 23, 2004

File: BC04-325

Question (1): Does UG-22(i) require that abnormal pressures resulting from internal deflagrations or detonations be considered in the design of a pressure vessel if such events are specified by the user?

Reply (1): Yes.

Question (2): If the response to Question 1 is "yes," does Section VIII, Division 1 define acceptance criteria for internal deflagrations and detonations?

Reply (2): Section VIII, Division 1, Nonmandatory Appendix H provides guidance to accommodate loadings produced by internal deflagrations. There are no rules in Section VIII, Division 1 that would provide guidance regarding loadings resulting from internal detonations. See U-2(g).

Interpretation: VIII-1-04-30

Subject: Section VIII, Division 1 (2001 Edition and 2003 Addenda); UG-34(c)(1) and UG-44, Pressure-Temperature Ratings of Standard Blind Flanges

Date Issued: April 7, 2004

File: BC03-623

Question (1): May a raised-face blind flange, conforming to a flange standard referenced in UG-34(c)(1), be used at the pressure-temperature ratings in the respective standards, without additional design calculations, if they are altered in such a manner that their final dimensions fall outside the tolerances of the respective standard?

Reply (1): No.

Question (2): May a raised-face blind flange, conforming to a flange standard referenced in UG-34(c)(1) and having a corrosion-resistant overlay welded to its interior face in such a manner that the final dimensions of the base material comply with the respective standard, be used at the pressure-temperature ratings in the respective standards, without additional design calculations?

Reply (2): Yes.

Interpretation: VIII-1-04-31

Subject: Section VIII, Division 1 (2001 Edition and 2003 Addenda); U-1(g)(3) and U-1(j), Steam Generator

Date Issued: April 7, 2004

File: BC03-775

Question (1): A pressure vessel with an operating pressure of 15 psi is constructed for the purpose of generating steam which is to be vented to a room at atmospheric pressure for the purpose of heating the room. Is it required by the rules of Section VIII, Division 1 that the vessel be considered within the Scope of the Code in accordance with U-1?

Reply (1): No.

Question (2): If the vessel described in Question 1 is constructed in accordance with the rules of Section VIII, Division 1 and the ASME Code Symbol is affixed to the vessel, is it required that the vessel be considered an unfired steam boiler per U-1(g)?

Reply (2): Yes.

Interpretation: VIII-1-04-32

Subject: Section VIII, Division 1 (2001 Edition and 2002 Addenda); UG-118, Methods of Marking

Date Issued: April 7, 2004

File: BC03-777

Question: Paragraph UG-118 of Section VIII, Division 1, requires markings including the ASME Code Symbol, per UG-116, to be stamped directly on the vessel or on a separate nameplate. May a Certificate Holder apply the required markings in UG-116 on the external surfaces of a vessel, except for the Code Symbol, by a programmable pin marking system which meets the requirements of UG-118(b) and (c)?

Reply: Yes.

Interpretation: VIII-1-04-33

Subject: Section VIII, Divisions 1 and 2; U-1(c)(2)(c) and AG-121(c), Pulp Refiners

Date Issued: April 7, 2004

File: BC03-1277

Question: Is a pressurized pulp refiner exempt from the scope of Section VIII, Division 1 by U-1(c)(2)(c) and Section VIII, Division 2 by AG-121(c), provided the primary design considerations and/or stresses are derived from the functional requirements of the device?

Reply: Yes. See U-1(c)(1) and Footnote 1 to AG-100.

Note: This interpretation also appears as VIII-2-04-04.

Interpretation: VIII-1-04-34

Subject: Section VIII, Division 1 (2001 Edition and 2003 Addenda); UHA-51(a)(4)(a)(3), Impact Testing Specimens

Date Issued: April 7, 2004

File: BC04-056

Question: When evaluating lateral expansion test results for high alloy materials per UHA-51, are there any provisions to reduce the required lateral expansion opposite the notch for subsized specimens?

Reply: No. The required lateral expansion opposite the notch specified in UHA-51 applies to both full-size and subsize specimens.

Interpretation: VIII-1-04-35

Subject: Section VIII, Division 1 (2001 Edition and 2003 Addenda); UG-43(d) and Fig. UG-40(a-2), Attachment of Nozzles

Date Issued: June 2, 2004

File: BC04-685

Question: Paragraph UG-43(d) specifies a requirement that drilled holes to be tapped shall not penetrate to within one-fourth of the corroded wall thickness from the inside surface of the vessel. Is the wall thickness referred to in this paragraph the same as the value t shown in Fig. UG-40?

Reply: Yes.

Interpretation: VIII-1-04-36

Subject: Section VIII, Division 1 (2001 Edition and 2003 Addenda); UG-120(c), Partial Data Report Forms

Date Issued: June 15, 2004

File: BC04-231

Question (1): Is a Partial Data Report required, per UG-120(c), when a seamless head is supplied per the rules of UG-11(b)?

Reply (1): No.

Question (2): Is it permitted by the rules of Section VIII, Division 1 that a Manufacturer may obtain a Partial Data Report for seamless heads supplied by another Manufacturer, under the rules of UG-11(b)?

Reply (2): Yes, provided the Manufacturer of the head is in possession of a valid Certificate of Authorization.

Interpretation: VIII-1-04-37

Subject: Section VIII, Division 1 (2001 Edition and 2003 Addenda); U-1(c)(2)(h), Jacket

Date Issued: June 15, 2004

File: BC04-346

Question: Per U-1(c)(2)(h), is a jacket (Type 1 through Type 5 as defined in Appendix 9) within the scope of the Code when the inner chamber operates at 15 psi or less and the jacket is at full vacuum?

Reply: Yes. See Appendix 9, 9-1(c).

Interpretation: VIII-1-04-38

Subject: Section VIII, Division 1 (2001 Edition); UG-125(c)(2), UG-133(d), UG-135(d)(1), and Code Case 2211

Date Issued: January 23, 2004

File: BC01-910

Question (1): Per UG-133(d), is it permissible not to consider internal failure in a heat exchanger as a cause of overpressure based on an evaluation of the service conditions and heat exchanger mechanical design?

Reply (1): No.

Question (2): In satisfying the provisions of UG-133(d), does Section VIII, Division 1 provide any requirements regarding the criteria or methods to be used in considering internal failure in a heat exchanger?

Reply (2): No, it is the user's or the user's designated agent's responsibility to define the criteria or methods to be used in determining the internal failure scenarios to be considered in the design of the heat exchanger.

Question (3): For a heat exchanger in which internal failure can occur, must a pressure relief device be provided on the low pressure side if the maximum operating pressure that results on the low pressure side does not exceed the test pressure?

Reply (3): Yes; see UG-125(a). It is the user's or the user's designated agent's responsibility to define the internal failure scenarios to be used in determining the pressure relief capacity requirements for the heat exchanger.

Question (4): Is it permissible for a vessel designed under the provisions of Section VIII, Division 1 to use Code Case 2211 to satisfy some overpressure scenarios, and a pressure relief device for other overpressure scenarios?

Reply (4): No.

Question (5): Is it permissible by the rules of Section VIII, Division 1 to use highly reliable electrical or electronic instrumentation to meet the requirements of UG-135(d)(1)?

Reply (5): No.

Question (6): Is it required by the rules of Section VIII, Division 1 that overpressure protection be provided for an unexpected source of external heat if engineering analysis shows that the vessel will fail due to excessive temperature before the pressure relief device(s) would be activated?

Reply (6): Yes.

Interpretation: VIII-1-04-39

Subject: Section VIII, Division 1 (2001 Edition, 2002 Addenda); Appendix W, Data Report Forms U-1 and U-1A

Date Issued: June 16, 2004

File: BC02-2682

Question: Is it required by the rules of Section VIII, Division 1 that information regarding cyclic and dynamic reactions be included on the Manufacturer's Data Report?

Reply: No; however, the Manufacturer may include such information in the remarks section of the Manufacturer's Data Report.

Interpretation: VIII-1-04-40

Subject: Section VIII, Division 1 (2001 Edition, 2003 Addenda); UG-126(a)

Date Issued: June 28, 2004

File: BC04-583

Question: Does a balanced bellows-type valve meet the requirement of ASME Section VIII, Division 1, UG-126(a) if the valve conforms to the definition for a balanced direct spring-loaded PRV and includes a bellows, as presented in ASME PTC 25-2001, paragraphs 2.3 and 2.4, respectively, and exhibits an operating characteristic defined for a safety, safety relief, or relief valve?

Reply: Yes.

Interpretation: VIII-1-04-41

Subject: Section VIII, Division 1 (2001 Edition, 2003 Addenda); Part UHX

Date Issued: July 22, 2004

File: BC04-864

Question (1): May the tubesheet design rules in Part UHX of Section VIII, Division 1 be used when the inside diameter of the shell, D_s, is different from the inside diameter of the channel, D_c?

Reply (1): Yes; however, Part UHX does not provide guidance regarding the maximum allowed difference between these diameters. The equations in Part UHX are derived based on the assumption that the untubed rim acts like a ring (i.e., its cross section does not distort).

Question (2): May the tubesheet design rules in Part UHX of Section VIII, Division 1 be used when the centerline of the channel is offset from the centerline of the shell?

Reply (2): No; see U-2(g).

Interpretation: VIII-1-04-42

Subject: Section VIII, Division 1 (2001 Edition, 2003 Addenda); Fig. UW-13.2 and Fig. 2-4

Date Issued: November 8, 2004

File: BC04-1015

Question (1): Are the flanges depicted in Fig. UW-13.2(m) and (n) of Section VIII, Division 1 considered to be integral flanges as defined in paragraph 2-4(a)(2)?

Reply (1): Yes.

Question (2): May the flanges shown in Fig. UW-13.2(m) and (n) be considered to be an "optional" flange and calculated as a ""loose" flange if the limitations as defined in paragraph 2-4(a)(3) are satisfied?

Reply (2): Yes.

Question (3): If the flanges shown in Fig UW-13.2(m) and (n) are considered to be an "optional" flange and calculated as a "loose" flange, must the dimensions shown in Fig UW-13.2(m) and (n) be satisfied?

Reply (3): Yes.

Question (4): In determining the weld size requirements for a tubesheet with bolting flange as given in Fig. UW-13.2(h) through (l), is there any consideration given to "optional" versus "integral" flanges as presented in paragraph 2.4?

Reply (4): No.

Interpretation: VIII-1-04-43

Subject: Section VIII, Division 1 (2001 Edition, 2003 Addenda); UW-2(a)(4)

Date Issued: November 8, 2004

File: BC04-1043

Question (1): With reference to Interpretation VIII-1-95-128, are the welds used to attach heater elements to flat covers in flanged immersion heaters classified by UW-3 as a Category A, B, C, or D joint?

Reply (1): No.

Question (2): If the answer to Question (1) is no, then may a fillet weld be used to attach a heater element to a flat cover in a flanged immersion heater intended for lethal service as defined in UW-2(a)?

Reply (2): Yes.

NUMERICAL INDEX

Location	Interpretation	File No.	Page No.
Mandatory Appendices			
Appendix 1	VIII-1-83-179	BC83-306	101
	VIII-1-83-236	BC83-597	134
	VIII-1-89-139	BC89-218	412
	VIII-1-01-153	BC03-516	869
Appendix 1, 1-2(a)(1)	VIII-1-89-131	BC89-151	409
Appendix 1, 1-4	VIII-1-83-285	BC84-141	157
	VIII-1-86-49	BC86-069	239
	VIII-1-89-175	BC90-023	430
	VIII-1-01-155	BC03-619	870
Appendix 1, 1-4(d)	VIII-1-86-77	BC86-254	255
Appendix 1, 1-4(f)(1)(e)	VIII-1-04-25	BC04-156	883
Appendix 1, 1-5	VIII-1-83-131	BC82-209	73
	VIII-1-83-139	BC83-132	77
	VIII-1-83-153	BC83-169	90
	VIII-1-83-321	BC84-381	182
	VIII-1-89-256	BC90-688	467
	VIII-1-92-55	BC91-453	533
Appendix 1, 1-6	VIII-1-86-03	BC85-223	214
	VIII-1-89-56	BC88-395	368
Appendix 1, Fig. 1-6	VIII-1-83-172	BC83-256	98
	VIII-1-95-07	BC94-191	626
Fig. 1-6(d)	VIII-1-95-58	BC95-042	652
Appendix 1, 1-7	VIII-1-83-98	BC82-807	57
	VIII-1-01-08	BC00-564	792
	VIII-1-01-32	BC01-079	806
	VIII-1-01-66	BC01-335	818
Appendix 1, 1-7(b)	VIII-1-95-152	BC96-527	708
	VIII-1-98-83	BC99-370	765
Fig. 1-7-1	VIII-1-01-66	BC01-335	818
Fig. 1-7-2	VIII-1-01-66	BC01-335	818
Appendix 1, 1-8	VIII-1-83-131	BC82-209	73
	VIII-1-83-283	BC84-139	156
	VIII-1-86-158	BC87-191	301
	VIII-1-92-55	BC91-453	533
	VIII-1-98-82	BC98-172a	765
	VIII-1-98-104	BC98-175	779
Appendix 2	VIII-1-83-39	BC82-398	25
	VIII-1-83-43	BC82-508	26
	VIII-1-83-235	BC83-590	133
	VIII-1-83-242	BC83-604	136
	VIII-1-83-297	BC82-122	171
	VIII-1-83-303	BC83-359	174
	VIII-1-83-340	BC84-656	196
	VIII-1-83-356	BC85-074	203
	VIII-1-86-117	BC87-006	278
	VIII-1-86-150	BC86-194	297

Location	Interpretation	File No.	Page No.
Mandatory Appendices (Cont'd)			
Appendix 2 (Cont'd)			
	VIII-1-86-173	BC86-247	306
	VIII-1-89-11	BC87-198	347
	VIII-1-89-35	BC88-250	359
	VIII-1-89-146	BC89-251	415
	VIII-1-92-37	BC91-600	520
	VIII-1-89-323	BC90-192	569
	VIII-1-92-220	BC94-109	616
	VIII-1-95-38	BC94-366	645
	VIII-1-95-73	BC95-313	663
	VIII-1-01-20	BC00-696	801
	VIII-1-01-22	BC00-703	801
	VIII-1-01-45	BC01-303	810
	VIII-1-01-78	BC01-407	827
	VIII-1-01-116	BC01-912	847
Appendix 2, 2-1(b)	VIII-1-04-08	BC03-1347	874
Appendix 2, 2-1(e)	VIII-1-98-26	BC97-508A	730
Appendix 2, 2-1(e)(2)	VIII-1-92-128	BC92-383	572
Appendix 2, 2-2	VIII-1-83-91	BC82-738	54
Appendix 2, 2-2(b)	VIII-1-01-114	BC01-606	846
Appendix 2, 2-2(d)	VIII-1-86-95	BC86-267	262
	VIII-1-86-171	BC85-177	306
	VIII-1-89-185	BC90-243	434
	VIII-1-95-98	BC95-471	678
Appendix 2, 2-3	VIII-1-83-96	BC82-801	56
	VIII-1-86-216	BC88-028	330
Appendix 2, 2-4	VIII-1-89-200	BC90-325	439
	VIII-1-89-200R	BC90-325*	440
	VIII-1-01-38	BC01-121	808
Appendix 2, 2-4(a)(1)	VIII-1-86-54	BC86-113	241
	VIII-1-98-72	BC99-297	756
Appendix 2, 2-5	VIII-1-01-59	BC01-296	815
	VIII-1-01-136	BC01-329	862
Appendix 2, 2-4(a)(3)	VIII-1-83-25	BC82-301	17
Appendix 2, 2-7(b)	VIII-1-92-57	BC92-053	534
Appendix 2, 2-9	VIII-1-92-121	BC92-299	570
	VIII-1-95-72	BC95-312	662
Appendix 2, Fig. 2-4	VIII-1-83-21	BC82-274	15
	VIII-1-83-31	BC82-196	22
	VIII-1-83-115	BC81-514	66
	VIII-1-86-25	BC85-464	222
	VIII-1-86-69	BC85-228	247
	VIII-1-86-70	BC85-230	248
	VIII-1-86-25R	BC86-464*	253
	VIII-1-86-138	BC87-120	288
	VIII-1-86-150	BC86-194	297

Location	Interpretation	File No.	Page No.
Mandatory Appendices (Cont'd)			
Appendix 2, Fig. 2-4 (Cont'd)			
	VIII-1-89-24	BC88-143	354
	VIII-1-89-185	BC90-243	434
	VIII-1-89-249	BC90-653	464
	VIII-1-89-258	BC90-773	468
	VIII-1-92-62	BC92-099	536
	VIII-1-95-69	BC95-234	661
	VIII-1-95-138	BC96-341A	703
	VIII-1-95-141	BC96-379	704
	VIII-1-98-13	BC96-342	725
	VIII-1-98-20	BC97-512	728
	VIII-1-98-51	BC98-288	744
	VIII-1-01-109	BC01-801	840
Appendix 2, Fig. 2-13	VIII-1-95-24	BC94-591	632
Appendix 2, Table 2-5.1	VIII-1-83-89R	BC81-258*	6
Appendix 2, 2-8	VIII-1-92-137	BC93-041	575
Appendix 2, 2-11	VIII-1-89-205	BC90-436	441
Appendix 2, 2-12(a)(1)	VIII-1-83-216	BC83-476	125
Appendix 2, 2-13(a)(2)	VIII-1-98-120	BC00-268	785
Appendix 3	VIII-1-86-115	BC87-004	277
	VIII-1-92-80	BC92-167	543
Appendix 4	VIII-1-83-87	BC82-828	52
	VIII-1-83-133R	BC82-718*	87
	VIII-1-83-221	BC83-578	127
	VIII-1-89-12	BC87-204	348
	VIII-1-92-169	BC93-485	592
Appendix 4, 4-3(b)	VIII-1-04-18	BC03-1647	877
Appendix 4, 4-3(f)	VIII-1-95-136	BC96-277	702
Appendix 5	VIII-1-86-02	BC79-696	213
	VIII-1-89-139	BC89-218	412
Appendix 6	VIII-1-95-83	BC95-389	667
Appendix 6, 6-4	VIII-1-83-41	BC82-409	25
	VIII-1-92-213	BC94-003	614
	VIII-1-95-51	BC95-046	650
Appendix 7, 7-3(a)(4)(b),(c),(d)	VIII-1-83-167	BC82-830	97
Appendix 8	VIII-1-83-326	BC84-564	184
	VIII-1-89-157	BC89-302	419
Appendix 8, 8-1	VIII-1-04-02	BC02-4118	873
Appendix 9	VIII-1-83-162	BC83-246	94
	VIII-1-83-288	BC84-157	159
	VIII-1-83-308	BC84-156	177
	VIII-1-89-124	BC88-139	406
	VIII-1-89-165	BC89-413	427
	VIII-1-89-241	BC89-237	461
	VIII-1-89-265	BC89-239	479
	VIII-1-89-278	BC90-747	483
	VIII-1-92-23	BC91-433	514
	VIII-1-92-77	BC91-629	542
	VIII-1-92-77R	BC91-629*	549
	VIII-1-92-116	BC90-657	563
	VIII-1-92-185	BC93-650	598
	VIII-1-92-210	BC94-137	613

Location	Interpretation	File No.	Page No.
Mandatory Appendices (Cont'd)			
Appendix 9 (Cont'd)			
	VIII-1-92-217	BC93-764	615
Appendix 9, 9-5(c)(4)	VIII-1-95-149	BC96-478	707
Appendix 9, 9-6	VIII-1-01-115	BC01-870	846
Appendix 10	VIII-1-83-166	BC82-754B	96
	VIII-1-92-106	BC92-304	559
	VIII-1-92-203	BC94-059	610
Appendix 10, 10-5	VIII-1-98-66	BC98-307	754
Appendix 10, 10-6	VIII-1-95-56	BC92-332	652
Appendix 10, 10-12	VIII-1-83-82	BC80-289	49
	VIII-1-83-82R	BC80-289*, BC85-158	189
Appendix 10, 10-15(d)	VIII-1-92-131	BC93-029	573
Appendix 12	VIII-1-83-306	BC83-592	176
	VIII-1-98-87	BC99-457	767
Appendix 12, 12-2	VIII-1-83-158	BC83-210	93
Appendix 12, 12-3(b)	VIII-1-89-170	BC90-005	429
	VIII-1-89-187	BC90-303	435
	VIII-1-92-36	BC91-115	520
	VIII-1-92-58	BC92-057	534
Appendix 12, 12-4	VIII-1-98-16	BC97-440	726
Appendix 13	VIII-1-83-184	BC83-328	103
	VIII-1-83-230	BC83-110, BC83-298	131
	VIII-1-83-252	BC83-662	142
	VIII-1-83-289	BC84-158	159
	VIII-1-83-363	BC84-643	206
	VIII-1-86-23	BC84-591	221
	VIII-1-86-09	BC85-285	216
	VIII-1-86-182	BC87-381	310
	VIII-1-01-91	BC01-640	833
Appendix 13, Fig. 13-2	VIII-1-01-42	BC01-225	809
Appendix 13, 13-2(a)	VIII-1-86-56	BC56-148	242
	VIII-1-92-155	BC92-103	583
	VIII-1-01-31	BC01-074	805
	VIII-1-01-124	BC02-2310	849
Appendix 13, 13-4(b)	VIII-1-92-222	BC93-512	617
	VIII-1-95-118	BC96-209 (BC96-228)	690
Appendix 13, 13-6	VIII-1-95-10	BC94-291	627
	VIII-1-95-94	BC95-473	677
Appendix 13, 13-14(e)	VIII-1-83-15	BC82-206	13
Appendix 14	VIII-1-83-281	BC84-135	156
	VIII-1-83-333	BC84-125	192
	VIII-1-86-186	BC87-405	312
	VIII-1-01-80	BC01-411	828
Appendix 14, Table 14-10.4.1	VIII-1-86-20	BC85-327	220
Appendix 14, 14-20	VIII-1-83-286	BC84-153	158
Appendix 14, 14-40	VIII-1-83-154	BC83-170	91
Appendix 14, 14-50	VIII-1-86-30	BC85-487	225
Appendix 15	VIII-1-83-361R	BC77-701*	205
Appendix 17	VIII-1-89-257	BC90-772	467
	VIII-1-89-271	BC90-300	481
	VIII-1-89-291	BC91-045	488

Location	Interpretation	File No.	Page No.
Mandatory Appendices (Cont'd)			
Appendix 17 (Cont'd)			
	VIII-1-89-298	BC91-047	491
	VIII-1-92-38	BC91-559	527
	VIII-1-92-101	BC92-010	557
	VIII-1-92-102	BC92-345	558
	VIII-1-92-191	BC93-741	605
	VIII-1-95-19	BC93-631	630
	VIII-1-98-105	BC99-456	779
Appendix 18	VIII-1-83-166	BC82-754B	96
	VIII-1-98-101	BC99-609	777
Appendix 19, 19-3	VIII-1-92-12	BC91-432	509
Appendix 19, 19-4(b)	VIII-1-89-106	BC89-169	92
Appendix 22, 22-3	VIII-1-89-152	BC89-275	417
	VIII-1-89-252	BC90-686	465
	VIII-1-92-47	BC91-628	531
	VIII-1-98-27	BC98-062	730
Appendix 23	VIII-1-01-103	BC01-724	837
Appendix 24	VIII-1-98-32	BC98-177	738
	VIII-1-01-136	BC01-329	862
Appendix 24, 24-1(f)	VIII-1-92-209	BC94-134	613
Appendix 24, 24-2(e)	VIII-1-89-107	BC89-185	92
	VIII-1-89-226	BC90-545	454
Appendix 26	VIII-1-95-154	BC96-525	708
Appendix 27	VIII-1-95-116	BC96-129	689
	VIII-1-98-91	BC99-478	773
Appendix 28	VIII-1-95-104	BC96-093	680
	VIII-1-01-05	BC00-502	791
	VIII-1-01-41	BC01-223	809
	VIII-1-01-60	BC01-297	816
	VIII-1-01-79	BC01-408	828
	VIII-1-01-110	BC01-843	840
	VIII-1-01-134	BC02-2640	857
Nonmandatory Appendices			
Appendix A	VIII-1-83-10	BC82-164	10
	VIII-1-83-20	BC82-259	15
	VIII-1-01-141	BC02-2426	864
Appendix A, A-1(a)	VIII-1-83-157	BC83-207	92
Appendix A, A-2	VIII-1-98-77	BC99-363	763
Appendix A, Fig. A-2	VIII-1-83-234	BC83-534	133
	VIII-1-01-67	BC01-301	819
Appendix A, Table A-2	VIII-1-83-56	BC81-403	33
Appendix E	VIII-1-83-228	BC82-824	130
Appendix F	VIII-1-89-301	BC91-209	492
Appendix L	VIII-1-83-212	BC82-882	123
	VIII-1-83-238	BC83-599	135
Appendix L, L-1	VIII-1-86-190	BC87-428	314
Appendix L, L-2.2	VIII-1-01-125	BC96-381	850
Appendix L, L-7	VIII-1-83-150	BC83-120	88
	VIII-1-89-242	BC90-404	461
	VIII-1-01-32	BC01-079	806
Appendix L, L-7.5	VIII-1-01-125	BC96-381	850
Appendix M	VIII-1-83-27	BC80-198	18
	VIII-1-83-28	BC80-607	19
	VIII-1-92-132	BC90-728	574

Location	Interpretation	File No.	Page No.
Nonmandatory Appendices (Cont'd)			
Appendix M (Cont'd)			
	VIII-1-92-132R	BC90-728*	624
	VIII-1-92-94	BC92-116	555
	VIII-1-92-94R	BC92-116*	675
	VIII-1-92-132	BC90-728	574
	VIII-1-98-17	BC97-443	727
Appendix M, M-5(a)	VIII-1-83-338	BC84-615	195
	VIII-1-98-90	BC99-447	768
Appendix M, M-5(b)	VIII-1-98-90	BC99-447	768
	VIII-1-01-03	BC00-391	790
Appendix M, M-6	VIII-1-95-25	BC94-058	632
Appendix M, M-7(a)	VIII-1-98-43	BC98-178	742
Appendix M, M-8(a)	VIII-1-01-16	BC00-676	799
Appendix P	VIII-1-83-130	BC81-717	73
	VIII-1-89-09	BC84-661	346
	VIII-1-92-44	BC91-564	530
	VIII-1-95-22	BC94-280	631
Appendix S	VIII-1-95-73	BC95-313	663
Appendix W	VIII-1-83-23	BC82-291	16
	VIII-1-83-70	BC82-529	39
	VIII-1-83-266	BC84-089	148
	VIII-1-86-82	BC85-320	257
	VIII-1-86-185	BC87-398	311
	VIII-1-92-29	BC91-466	517
	VIII-1-92-102	BC92-345	558
	VIII-1-92-106	BC92-304	559
	VIII-1-92-123	BC92-454	571
	VIII-1-83-322	BC84-411	182
	VIII-1-89-111	BC89-170	399
	VIII-1-92-118	BC92-104	564
	VIII-1-92-199	BC93-446	608
	VIII-1-92-202	BC94-036	609
	VIII-1-95-76	BC94-417	664
	VIII-1-98-27	BC98-062	730
	VIII-1-98-76	BC99-280	763
	VIII-1-01-48	BC01-194	811
	VIII-1-01-104	BC01-793	838
	VIII-1-04-39	BC02-2682	890
Appendix W, Table W-3	VIII-1-83-322	BC84-411	182
	VIII-1-89-111	BC89-170	399
	VIII-1-92-118	BC92-104	564
	VIII-1-92-199	BC93-446	608
	VIII-1-92-202	BC94-036	609
	VIII-1-95-29	BC94-502	641
	VIII-1-95-35	BC93-524	643
	VIII-1-95-80	BC94-351	666
	VIII-1-98-56	BC98-367	751
	VIII-1-01-54	BC01-224	814
	VIII-1-01-76	BC01-379	826
Appendix Y	VIII-1-83-303	BC83-359	174
	VIII-1-89-125	BC88-162	406
	VIII-1-95-16	BC94-410	629
Appendix Y, Y-3	VIII-1-89-15	BC88-077	349
Appendix Z	VIII-1-86-196	BC86-527	320

Location	Interpretation	File No.	Page No.
Nonmandatory Appendices (Cont'd)			
Appendix Z (Cont'd)			
	VIII-1-89-25	BC88-164	354
Appendix AA	VIII-1-89-20	BC88-125	352
	VIII-1-92-88	BC92-170	553
	VIII-1-95-18	BC92-326	630
	VIII-1-98-34	BC98-225	738
Appendix AA, AA-2.4.1	VIII-1-01-62	BC01-313	816
Appendix AA, AA-5	VIII-1-83-354	BC85-028	202
Appendix CC	VIII-1-92-78	BC92-148	542
Appendix DD	VIII-1-04-09	BC03-1491	875
Appendix EE	VIII-1-92-109	BC92-344	560
Code Cases			
Code Case 1177-7	VIII-1-83-125	BC82-863	70
	VIII-1-83-237	BC83-598	134
	VIII-1-83-316	BC84-410	180
Code Case 1409-5	VIII-1-83-123	BC82-834	70
Code Case 1667-1	VIII-1-86-53	BC86-106	241
Code Case 1883	VIII-1-83-206	BC83-463	114
Code Case 1939	VIII-1-83-342	BC84-667	197
Code Case 1986-2	VIII-1-89-99	BC89-112	89
Code Case 2005	VIII-1-86-160	BC87-194	302
Code Case 2046	VIII-1-95-147	BC96-472	706
Code Case 2211	VIII-1-01-07	BC00-501	792
	VIII-1-01-111	BC99-084	845
Code Case 2235	VIII-1-98-41	BC98-327	741
	VIII-1-01-39	BC01-125	808
Code Case 2278	VIII-1-01-29	BC01-094	804
Foreword	VIII-1-83-164	BC84-610	95
	VIII-1-83-364	BC85-179	206
	VIII-1-95-29	BC94-502	641
	VIII-1-95-49	BC94-672	649
Interpretation Statement in Code	VIII-1-95-159	BC96-134	715
Introduction			
U-1	VIII-1-83-214	BC83-127	124
	VIII-1-83-259	BC84-050	146
	VIII-1-86-94	BC86-257	262
	VIII-1-86-99	BC86-313	264
	VIII-1-86-136	BC87-116	278
	VIII-1-86-163	BC87-202	303
	VIII-1-86-224	BC88-051	334
	VIII-1-89-03	BC88-123	343
	VIII-1-89-102	BC89-117	390
	VIII-1-89-147	BC89-255	415
	VIII-1-89-163	BC89-438	421
	VIII-1-95-128	BC95-396	694
	VIII-1-98-24	BC98-115	729
U-1(a)	VIII-1-86-127	BC86-127	282
	VIII-1-95-130	BC96-380	694
U-1(c)	VIII-1-89-41	BC88-015	361
	VIII-1-92-15	BC91-232	511

Location	Interpretation	File No.	Page No.
Introduction (Cont'd)			
U-1(c) (Cont'd)			
	VIII-1-92-15R	BC91-232*	511
U-1(c)(1)	VIII-1-01-147	BC03-175	866
U-1(c)(2)	VIII-1-98-54	BC98-336	750
U-1(c)(2)(c)	VIII-1-98-89	BC99-479	767
	VIII-1-01-98	BC01-227	836
	VIII-1-04-33	BC03-1277	887
U-1(c)(2)(e)	VIII-1-98-54	BC98-336	750
	VIII-1-01-131	BC02-3353	856
U-1(c)(2)(d)	VIII-1-98-89	BC99-479	767
U-1(c)(2)(g)	VIII-1-04-20	BC03-915	878
U-1(c)(2)(h)	VIII-1-98-19	BC97-444	727
	VIII-1-01-15	BC00-664	799
	VIII-1-98-112	BC00-096	782
	VIII-1-01-97	BC00-465	835
	VIII-1-04-37	BC04-346	888
U-1(c)(2)(i)	VIII-1-01-15	BC00-664	799
U-1(c)(3)	VIII-1-89-46	BC88-174	363
	VIII-1-89-176	BC90-020	431
	VIII-1-89-231	BC90-479	456
	VIII-1-92-164	BC93-503	591
	VIII-1-95-44	BC94-669	647
U-1(c)(5)	VIII-1-83-99	BC82-808	57
	VIII-1-86-85	BC86-292	258
	VIII-1-89-110	BC89-167	399
	VIII-1-89-261	BC90-652	476
U-1(c)(6)	VIII-1-83-247	BC83-648	140
	VIII-1-86-13	BC85-291	218
	VIII-1-89-34	BC88-246	358
U-1(c)(7)	VIII-1-86-164	BC87-291	303
U-1(c)(7)(a)	VIII-1-86-98	BC86-301	264
U-1(c)(8)	VIII-1-89-01	BC88-119	343
	VIII-1-89-114	BC89-004	400
U-1(c)(9)	VIII-1-86-142	BC87-161	294
	VIII-1-86-143	BC87-165	294
	VIII-1-86-145	BC87-169	295
	VIII-1-86-154	BC87-175	299
	VIII-1-86-165	BC87-250	304
	VIII-1-86-211	BC88-007	328
U-1(d)	VIII-1-95-02	BC94-281	625
	VIII-1-95-107	BC96-122	682
U-1(e)	VIII-1-83-03	BC81-260	7
	VIII-1-89-112	BC89-186	400
	VIII-1-89-115	BC89-202	401
	VIII-1-92-52	BC90-299	532
	VIII-1-01-04	BC00-500	790
U-1(e)(1)	VIII-1-83-256	BC84-030	144
	VIII-1-83-282	BC84-137	156
	VIII-1-83-329	BC82-755	191
	VIII-1-86-193	BC85-222	319
	VIII-1-95-52	BC95-047	650
U-1(e)(1)(a)	VIII-1-01-09	BC00-596	793
	VIII-1-01-28	BC00-705	804
U-1(e)(1)(b)	VIII-1-86-24	BC84-600	222

Location	Interpretation	File No.	Page No.
Introduction (Cont'd)			
U-1(e)(1)(b) (Cont'd)			
	VIII-1-89-168	BC89-437	428
U-1(e)(1)(c)	VIII-1-89-29	BC88-189	357
	VIII-1-95-88	BC95-466	669
	VIII-1-98-57	BC98-368	751
U-1(e)(2)	VIII-1-98-81	BC99-373	765
	VIII-1-01-14	BC00-598	794
U-1(e)(4)	VIII-1-83-256R	BC84-030*	377
	VIII-1-95-74	BC94-118	663
U-1(g)	VIII-1-83-104	BC79-780	60
	VIII-1-86-60	BC86-211	244
	VIII-1-86-87	BC86-295	259
	VIII-1-86-124	BC87-071	281
	VIII-1-86-201	BC87-486	322
	VIII-1-86-219	BC87-047	331
	VIII-1-92-139	BC93-032	576
	VIII-1-95-101	BC95-498B	679
	VIII-1-01-33	BC01-091	806
	VIII-1-01-74	BC01-321	825
	VIII-1-04-31	BC03-775	886
U-1(g)(1)	VIII-1-92-215	BC94-050	615
	VIII-1-95-77	BC94-586	664
	VIII-1-98-15	BC98-088	726
U-1(g)(2)	VIII-1-98-15	BC98-088	726
U-1(g)(3)	VIII-1-95-130	BC96-380	694
	VIII-1-98-15	BC98-088	726
U-1(h)	VIII-1-86-35	BC85-522	227
	VIII-1-95-48	BC94-670	649
	VIII-1-95-84	BC95-390	668
U-1(i)	VIII-1-89-31	BC88-201	357
U-1(j)	VIII-1-86-161	BC87-197	302
	VIII-1-89-203	BC90-257	441
	VIII-1-89-235	BC90-534	458
	VIII-1-89-306	BC91-107	493
	VIII-1-04-10	BC03-1192	875
U-1(k)	VIII-1-83-201	BC83-420	112
	VIII-1-83-258	BC84-033	145
	VIII-1-86-132	BC87-107	285
U-2(a)	VIII-1-83-30	BC82-166	21
	VIII-1-01-07	BC00-501	792
U-2(a)(4)	VIII-1-95-74	BC94-118	663
U-2(b)	VIII-1-86-79	BC86-259	256
U-2(d)	VIII-1-01-12	BC00-131	794
U-2(f)(3)	VIII-1-89-223	BC90-535	453
U-2(g)	VIII-1-83-176	BC83-285	100
	VIII-1-83-200	BC83-408	112
	VIII-1-83-314	BC84-379	179
	VIII-1-86-02	BC79-696	213
	VIII-1-86-04	BC85-227	214
	VIII-1-89-161	BC89-374	420
	VIII-1-89-275	BC91-011	482
	VIII-1-92-146	BC93-373	579
	VIII-1-92-198	BC92-219	608
	VIII-1-95-09	BC94-474	627

Location	Interpretation	File No.	Page No.
Introduction (Cont'd)			
U-2(g) (Cont'd)			
	VIII-1-01-99	BC01-326	836
U-2(h)	VIII-1-89-08	BC84-268	346
	VIII-1-89-286	BC90-303	486
	VIII-1-98-96	BC98-292	775
U-2(h)(3)	VIII-1-95-26	BC94-106	639
U-2(i)	VIII-1-83-83	BC81-267	50
	VIII-1-86-119	BC87-009	279
	VIII-1-89-150	BC89-278	416
	VIII-1-89-246	BC90-650	463
Table U-3	VIII-1-01-108	BC01-795	839
Part UB			
UB-6	VIII-1-86-228	BC88-083	335
UB-18	VIII-1-83-312	BC84-340	178
	VIII-1-83-312R	BC84-340*	190
Part UCD			
UCD-16	VIII-1-01-12	BC00-131	794
UCD-78	VIII-1-83-342	BC84-667	197
UCD-101	VIII-1-83-108	BC80-053	62
	VIII-1-89-169	BC90-003	428
Part UCI			
Part UCI	VIII-1-83-352	BC85-016	202
	VIII-1-92-61	BC92-098	535
	VIII-1-95-34	BC91-573	643
UCI-16	VIII-1-01-12	BC00-131	794
Table UCI-23	VIII-1-86-197	BC87-070	320
UCI-23(b)	VIII-1-86-86	BC86-293	259
UCI-35	VIII-1-83-172	BC83-256	98
UCI-78	VIII-1-86-137	BC87-117	287
	VIII-1-89-305	BC91-103	493
UCI-101	VIII-1-83-108	BC80-053	62
	VIII-1-86-91	BC86-235	261
	VIII-1-86-137	BC87-117	287
	VIII-1-86-152	BC87-164	298
	VIII-1-89-169	BC90-003	428
Part UCL			
UCL-1	VIII-1-83-136	BC83-224	76
UCL-23(b)	VIII-1-83-205	BC83-461	114
UCL-34	VIII-1-83-189	BC81-531	106
	VIII-1-83-192	BC82-655	108
	VIII-1-83-335	BC84-384	193
	VIII-1-95-137	BC96-334	703
UCL-34(a) and (b)	VIII-1-83-207	BC83-464	114
UCL-35	VIII-1-95-137	BC96-334	703
UCL-35(c)	VIII-1-83-107	BC82-169	62
UCL-36	VIII-1-83-191	BC82-221	107
UCL-51	VIII-1-98-108	BC00-080	780
Part UCS			
UCS-5(b)	VIII-1-86-29	BC85-451	224
	VIII-1-92-83	BC92-173	544
UCS-6	VIII-1-86-103	BC86-370	266

Location	Interpretation	File No.	Page No.
Part UCS (Cont'd)			
UCS-6 (Cont'd)			
	VIII-1-89-66	BC88-439	372
UCS-6(b)	VIII-1-92-37	BC91-600	520
	VIII-1-95-03	BC94-286	625
UCS-6(b)(3)	VIII-1-92-207	BC94-108	611
	VIII-1-98-80	BC99-362	764
UCS-7	VIII-1-01-92	BC01-340	833
UCS-10	VIII-1-92-152	BC93-138	582
	VIII-1-95-131	BC96-306	695
UCS-11	VIII-1-92-03	BC91-230	505
	VIII-1-92-83	BC92-173	544
UCS-12	VIII-1-83-37	BC82-314	24
UCS-12(b)	VIII-1-92-152	BC93-138	582
UCS-23	VIII-1-95-39	BC94-567	645
Table UCS-23	VIII-1-83-84	BC82-545	50
	VIII-1-83-180	BC83-311	101
	VIII-1-83-218	BC83-546	126
	VIII-1-83-226	BC81-301	129
	VIII-1-83-253	BC83-663	142
	VIII-1-86-32	BC85-496	226
UCS-25	VIII-1-83-228	BC82-824	130
	VIII-1-86-46	BC85-605	238
	VIII-1-86-134	BC87-112	286
	VIII-1-89-126	BC88-242	407
UCS-56	VIII-1-83-74	BC82-664	41
	VIII-1-83-100	BC82-825	58
	VIII-1-83-103	BC82-873	59
	VIII-1-83-237	BC83-598	134
	VIII-1-83-335	BC84-384	193
	VIII-1-86-55	BC86-114	241
	VIII-1-89-63	BC88-428	371
	VIII-1-89-212	BC90-493	449
	VIII-1-89-212R	BC90-493*	449
	VIII-1-92-147	BC93-418	580
	VIII-1-92-153	BC93-358	582
	VIII-1-95-116	BC96-129	689
	VIII-1-98-91	BC99-478	773
	VIII-1-01-143	BC02-2819	865
Table UCS-56	VIII-1-83-97	BC82-806	56
	VIII-1-83-100	BC82-825	58
	VIII-1-83-119	BC82-411	68
	VIII-1-83-168	BC83-084	97
	VIII-1-83-307	BC83-636	176
	VIII-1-86-06	BC85-245	215
	VIII-1-86-41	BC85-468	235
	VIII-1-86-55	BC86-114	241
	VIII-1-86-204	BC85-509	324
	VIII-1-86-207	BC87-270	326
	VIII-1-89-30	BC88-192	357
	VIII-1-89-284	BC90-863	486
	VIII-1-89-289	BC90-693	488
	VIII-1-89-293	BC91-049	489
	VIII-1-92-104	BC92-290	558
	VIII-1-92-176	BC93-641	595
	VIII-1-92-182	BC93-647	597

Location	Interpretation	File No.	Page No.
Part UCS (Cont'd)			
Table UCS-56 (Cont'd)			
	VIII-1-92-183	BC93-648	597
	VIII-1-92-183R	BC93-648*	597
	VIII-1-95-33	BC88-084	642
	VIII-1-98-108	BC00-080	780
	VIII-1-01-19	BC00-691 [BC00-708]	800
UCS-56(c)	VIII-1-86-17	BC85-323	219
UCS-56(d)(2)	VIII-1-92-66	BC92-054	537
UCS-56(d)(3)	VIII-1-98-11	BC97-275	719
	VIII-1-98-110	BC00-082	781
UCS-56(d)(4)	VIII-1-83-175	BC83-283	100
UCS-56(e)	VIII-1-01-87	BC01-588	831
UCS-56(f)	VIII-1-83-59	BC81-656	34
	VIII-1-89-202	BC90-388	440
Table UCS-56.1	VIII-1-83-165	BC82-736	96
	VIII-1-89-232	BC90-481	457
	VIII-1-89-232R	BC90-481*	457
UCS-57	VIII-1-83-122	BC82-549	69
	VIII-1-86-140	BC87-171	293
	VIII-1-92-147	BC93-418	580
	VIII-1-95-63	BC95-167	654
Table UCS-57	VIII-1-83-271	BC84-113	151
UCS-66	VIII-1-89-53	BC88-387	367
	VIII-1-89-141	BC89-229	413
	VIII-1-89-216	BC90-399	451
	VIII-1-89-225	BC90-544	454
	VIII-1-92-20	BC88-240	513
	VIII-1-92-21	BC89-037	513
	VIII-1-92-157	BC93-439	584
	VIII-1-92-186	BC93-652	598
	VIII-1-95-158	BC97-254	710
	VIII-1-01-123	BC02-2314	849
Fig. UCS-66	VIII-1-89-44	BC88-111	362
	VIII-1-89-190	BC90-261	436
	VIII-1-89-274	BC90-861	482
	VIII-1-92-93	BC90-247	554
	VIII-1-92-122	BC92-406	570
	VIII-1-92-134	BC92-455	574
	VIII-1-92-142	BC93-104	578
	VIII-1-92-144	BC93-349	579
	VIII-1-92-201	BC94-044	609
	VIII-1-92-218	BC93-777A	616
	VIII-1-92-219	BC94-073	616
	VIII-1-95-54	BC93-438	651
	VIII-1-95-62	BC95-161	654
	VIII-1-95-158	BC97-254	710
	VIII-1-01-25	BC01-056	803
	VIII-1-01-48	BC01-194	811
UCS-66(a)	VIII-1-89-279	BC90-771	484
	VIII-1-89-295	BC91-083	490
	VIII-1-95-68	BC95-233	661
	VIII-1-01-137	BC99-102	862
UCS-66(a)(1)(a)	VIII-1-95-62	BC95-161	654
UCS-66(a)(1)(b)	VIII-1-89-308	BC90-726	494

Location	Interpretation	File No.	Page No.
Part UCS (Cont'd)			
UCS-66(a)(1)(b) (Cont'd)			
	VIII-1-98-13	BC96-342	725
UCS-66(a)(3)	VIII-1-89-217	BC90-496	451
	VIII-1-92-41	BC91-044	529
UCS-66(b)	VIII-1-82-45	BC81-038	87
	VIII-1-86-230	BC88-086	336
	VIII-1-89-239	BC89-162	460
	VIII-1-92-98	BC92-319	556
	VIII-1-95-85	BC95-397	668
	VIII-1-98-93	BC99-565	774
UCS-66(b)(3)	VIII-1-98-05	BC96-257	717
UCS-66(c)	VIII-1-89-17	BC88-097	350
	VIII-1-89-76	BC89-005	380
	VIII-1-89-155R	BC89-312*	418
	VIII-1-89-267	BC89-253	479
	VIII-1-92-63	BC92-075	536
	VIII-1-95-15	BC94-186	629
	VIII-1-95-160	BC96-378	725
	VIII-1-98-10	BC97-274	719
	VIII-1-98-39	BC98-286	740
UCS-66(c)(2)	VIII-1-83-126	BC83-073	71
	VIII-1-83-127	BC83-083	71
	VIII-1-83-253	BC83-663	142
	VIII-1-83-270	BC84-106	151
UCS-66(d)	VIII-1-86-220	BC87-041	332
UCS-66(g)	VIII-1-01-06	BC00-503	791
Fig. UCS-66.1	VIII-1-98-93	BC99-565	774
	VIII-1-01-37	BC01-106	807
UCS-67	VIII-1-89-322	BC90-683	551
	VIII-1-95-158	BC97-254	710
	VIII-1-01-110	BC01-843	840
UCS-67(a)	VIII-1-89-240	BC89-226	460
	VIII-1-89-273	BC90-770	482
	VIII-1-92-124	BC92-457	571
	VIII-1-92-173	BC93-591	594
	VIII-1-98-52	BC98-086	749
UCS-67(a)(1)	VIII-1-01-46	BC01-192	810
UCS-67(a)(2)	VIII-1-01-06	BC00-503	791
	VIII-1-01-64	BC01-317	817
	VIII-1-01-86	BC01-403	830
	VIII-1-01-93	BC01-647	834
UCS-67(b)	VIII-1-89-23	BC88-142	354
	VIII-1-92-142	BC93-104	578
UCS-67(c)	VIII-1-83-49	BC81-546	29
	VIII-1-92-187	BC93-683	599
UCS-67(d)	VIII-1-92-219	BC94-073	616
	VIII-1-95-102	BC96-098	679
UCS-67(d)(2)	VIII-1-01-06	BC00-503	791
	VIII-1-01-36	BC01-105	807
	VIII-1-01-93	BC01-647	834
UCS-68	VIII-1-92-126	BC93-140	572
UCS-68(b)	VIII-1-98-99	BC99-597	776
UCS-68(c)	VIII-1-95-15	BC94-186	629
	VIII-1-95-160	BC96-378	725

Location	Interpretation	File No.	Page No.
Part UCS (Cont'd)			
UCS-68(c) (Cont'd)			
	VIII-1-01-19	BC00-691 [BC00-708]	800
	VIII-1-01-130	BC02-2793	855
	VIII-1-01-121	BC02-2427	848
UCS-79	VIII-1-83-71	BC82-587	40
	VIII-1-83-223	BC83-582	128
	VIII-1-83-224	BC83-586	129
	VIII-1-86-170	BC84-170	305
	VIII-1-86-222	BC88-048	333
	VIII-1-89-74	BC88-472	380
	VIII-1-01-57	BC01-288	815
UCS-79(b)	VIII-1-95-132	BC96-351	695
UCS-79(b) and Part UHA	VIII-1-83-148	BC82-403	88
UCS-79(d)	VIII-1-83-12	BC82-170	11
	VIII-1-83-81	BC82-729	43
	VIII-1-83-105	BC82-798	61
	VIII-1-83-337	BC84-601	194
	VIII-1-86-48	BC86-068	239
	VIII-1-89-259	BC90-746	468
	VIII-1-92-46	BC91-627	530
	VIII-1-95-50	BC94-684	649
	VIII-1-95-142	BC96-352	704
UCS-79(d)(3)	VIII-1-86-15	BC85-319	218
UCS-79(e)	VIII-1-92-59	BC91-289	535
UCS-85	VIII-1-83-114	BC81-130	65
	VIII-1-83-122	BC82-549	69
	VIII-1-83-293	BC84-193	161
	VIII-1-86-37	BC85-606	233
	VIII-1-86-125R	BC87-019*	293
	VIII-1-89-19	BC88-120	352
	VIII-1-89-69	BC88-193	378
	VIII-1-89-140	BC89-224	412
	VIII-1-01-73	BC01-287	825
UCS-85(b)	VIII-1-83-32	BC82-240	22
	VIII-1-83-116	BC81-559	66
	VIII-1-86-27	BC85-140	223
	VIII-1-86-27R	BC85-140*	549
	VIII-1-86-45	BC85-602	237
	VIII-1-86-194	BC86-105	319
	VIII-1-92-39	BC91-565	528
UCS-85(b) and (e)	VIII-77-33R	NA	789
	VIII-1-83-227	BC82-563	130
	VIII-1-89-314	BC90-483	497
	VIII-1-98-55	BC98-365	751
UCS-85(c)	VIII-1-83-353	BC85-025	202
	VIII-1-01-101	BC01-341	837
UCS-85(d)	VIII-1-89-162	BC89-375	421
Part UF			
UF-7	VIII-1-89-73	BC88-471	379
	VIII-1-95-44	BC94-669	647
	VIII-1-01-49	BC01-196	812
UF-30	VIII-1-89-39	BC88-411	360
UF-31(b)(1)(a)	VIII-1-92-213	BC94-003	614
UF-32(b)	VIII-1-89-135	BC89-206	410

Location	Interpretation	File No.	Page No.
Part UF (Cont'd)			
UF-32(b) (Cont'd)			
	VIII-1-92-01	BC90-235	505
UF-37	VIII-1-83-311	BC84-313	178
	VIII-1-92-01	BC90-235	505
UF-53	VIII-1-89-58	BC88-413	369
Part UG			
UG-4	VIII-1-83-24	BC82-295	16
	VIII-1-86-38	BC85-608	233
	VIII-1-89-65	BC88-437	372
UG-4(a)	VIII-1-92-74	BC91-412	540
UG-4(b)	VIII-1-92-83	BC92-173	544
	VIII-1-92-89	BC92-216	553
	VIII-1-92-172	BC92-460	593
	VIII-1-92-197	BC93-716	607
UG-5(b)	VIII-1-83-204	BC83-453	113
	VIII-1-83-213	BC83-075	124
UG-6	VIII-1-92-180	BC93-627	596
UG-8	VIII-1-89-95	BC89-082	387
	VIII-1-92-168	BC93-448	592
UG-8(a)	VIII-1-86-209	BC87-474	327
UG-8(b)	VIII-1-98-79	BC99-358	764
UG-9	VIII-1-86-343	BC84-674	197
	VIII-1-92-149	BC93-111	581
UG-10	VIII-1-83-348	BC82-385B, BC83-085	200
	VIII-1-86-105	BC86-379	267
	VIII-1-86-188	BC87-425	313
	VIII-1-89-07	BC87-430	345
	VIII-1-89-59	BC88-422	369
	VIII-1-89-60	BC88-423	370
	VIII-1-89-75	BC89-004	380
	VIII-1-89-277	BC91-013	483
	VIII-1-92-149	BC93-111	581
	VIII-1-95-109	BC93-669	687
UG-10(a)	VIII-1-83-06	BC81-660	8
	VIII-1-86-62	BC86-218	244
	VIII-1-89-243	BC90-651	462
	VIII-1-98-70	BC98-488	756
UG-10(a)(1)	VIII-1-92-18	BC91-399	512
UG-10(a)(2)	VIII-1-89-198	BC90-294	438
UG-11	VIII-1-83-65	BC82-293	37
	VIII-1-83-217	BC83-544	125
	VIII-1-83-293	BC84-193	161
	VIII-1-83-345	BC84-677	198
	VIII-1-89-282	BC90-791	485
	VIII-1-95-128	BC95-396	694
	VIII-1-95-150	BC96-523	707
	VIII-1-98-01	BC96-536	716
	VIII-1-01-22	BC00-703	801
	VIII-1-01-149	BC03-458	867
UG-11(a)	VIII-1-89-145	BC89-242	414
	VIII-1-89-283	BC90-865	485
	VIII-1-92-40	BC92-036	528
	VIII-1-95-59	BC95-050	653

Location	Interpretation	File No.	Page No.
Part UG (Cont'd)			
UG-11(a) (Cont'd)			
	VIII-1-98-68	BC99-218	755
	VIII-1-04-11	BC01-279	875
UG-11(a)(1)	VIII-1-83-174	BC83-266	99
	VIII-1-89-280	BC90-774	484
	VIII-1-95-14	BC94-136	629
	VIII-1-98-47	BC98-296	743
	VIII-1-98-55	BC98-365	751
	VIII-1-98-67	BC99-083	755
UG-11(a)(2)	VIII-1-89-204	BC90-435	441
	VIII-1-95-140	BC96-373	704
UG-11(a)(3)	VIII-1-86-92	BC86-255	261
UG-11(b)	VIII-1-83-01	BC81-195	6
	VIII-1-86-87	BC86-273	259
	VIII-1-86-109	BC86-451	268
	VIII-1-86-112	BC86-513	276
	VIII-1-89-96	BC89-084	388
	VIII-1-89-236	BC90-625	458
	VIII-1-95-70	BC95-173	662
UG-11(c)	VIII-1-83-55	BC81-269	32
	VIII-1-83-186R	BC83-071A*	121
	VIII-1-86-34	BC85-503	226
	VIII-1-92-06	BC91-270	506
	VIII-1-92-50	BC90-788	532
	VIII-1-92-54	BC91-402	532
	VIII-1-92-120	BC92-405	570
	VIII-1-95-21	BC94-494	631
	VIII-1-95-122	BC96-219	691
UG-11(c)(2)	VIII-1-83-330	BC83-320	191
	VIII-1-89-320	BC91-265	499
UG-12	VIII-1-95-131	BC96-306	695
UG-12(b)	VIII-1-83-109	BC82-195	63
	VIII-1-95-125	BC96-249	692
UG-13	VIII-1-92-83	BC92-173	544
UG-14	VIII-1-86-128	BC87-043	283
	VIII-1-92-95	BC87-296	555
UG-15	VIII-1-89-28	BC88-182	356
	VIII-1-89-194	BC90-345	437
	VIII-1-92-16	BC91-255	511
UG-16(b)	VIII-1-83-285	BC84-141	157
	VIII-1-86-214	BC88-011	329
UG-16(b)(1)	VIII-1-95-145	BC96-245	705
UG-16(b)(2)	VIII-1-86-36	BC85-599	233
	VIII-1-95-145	BC96-245	705
UG-16(b)(3)	VIII-1-98-74	BC99-269	757
UG-16(b)(4)	VIII-1-89-156	BC88-052	419
	VIII-1-92-216	BC93-718	615
	VIII-1-98-58	BC98-526	752
	VIII-1-98-74	BC99-269	757
UG-16(c)	VIII-1-86-67	BC86-240	247
	VIII-1-92-216	BC93-718	615
	VIII-1-98-33	BC98-180	738
	VIII-1-98-84	BC99-222	766
UG-16(d)	VIII-1-83-261	BC84-052	147

Location	Interpretation	File No.	Page No.
Part UG (Cont'd)			
UG-16(d) (Cont'd)			
	VIII-1-86-11	BC85-287	217
UG-18	VIII-1-89-316	BC90-679	498
UG-19	VIII-1-83-60	BC82-659	35
	VIII-1-89-82	BC89-056	382
	VIII-1-95-09	BC94-474	627
	VIII-1-01-99	BC01-326	836
UG-19(b) and (c)	VIII-1-01-12	BC00-131	794
UG-20	VIII-1-83-309	BC84-264	177
	VIII-1-86-02	BC79-696	213
	VIII-1-86-121	BC84-598	280
	VIII-1-89-133	BC89-189	409
	VIII-1-89-268	BC90-225	480
	VIII-1-92-64	BC92-102	536
UG-20(a)	VIII-1-95-153	BC96-233	708
	VIII-1-01-138	BC01-405	863
UG-20(b)	VIII-1-89-270	BC90-295	481
	VIII-1-01-23	BC00-084	802
UG-20(f)	VIII-1-86-231	BC88-117	337
	VIII-1-89-48	BC88-212	364
	VIII-1-89-62	BC88-427	371
	VIII-1-89-91	BC89-074	386
	VIII-1-89-100	BC89-114	389
	VIII-1-89-127	BC88-430	407
	VIII-1-89-132	BC89-160	409
	VIII-1-89-138	BC89-217	411
	VIII-1-89-166	BC89-414	427
	VIII-1-89-199	BC90-314	439
	VIII-1-89-138R	BC89-217*	447
	VIII-1-89-248	BC90-690	464
	VIII-1-89-322	BC90-683	551
	VIII-1-92-187	BC93-683	599
	VIII-1-92-201	BC94-044	609
	VIII-1-01-84	BC01-607	830
	VIII-1-01-121	BC02-2427	848
UG-20(f)(1)	VIII-1-89-137	BC89-209	411
UG-20(f)(3)	VIII-1-95-111	BC96-246	687
UG-21	VIII-1-86-121	BC84-598	280
	VIII-1-92-71	BC91-177	539
	VIII-1-95-64	BC95-172	655
UG-22	VIII-1-86-191	BC87-313	314
	VIII-1-89-06	BC83-137	345
	VIII-1-89-10	BC87-160	347
	VIII-1-89-143	BC89-238	413
	VIII-1-92-184	BC93-621	598
	VIII-1-95-82	BC95-310	667
	VIII-1-01-70	BC01-380	821
	VIII-1-01-83	BC01-592	829
UG-22(b)	VIII-1-95-64	BC95-172	655
	VIII-1-01-82	BC01-591	829
UG-22(g)	VIII-1-04-27	BC04-324	884
UG-22(i)	VIII-1-04-29	BC04-325	885
UG-23	VIII-1-93-621	BC84-592	184
	VIII-1-86-166	BC87-251	304
	VIII-1-89-50	BC88-358	365

Location	Interpretation	File No.	Page No.
Part UG (Cont'd)			
UG-23 (Cont'd)			
	VIII-1-89-84	BC89-064	383
	VIII-1-92-44	BC91-564	530
	VIII-1-95-131	BC96-306	695
UG-23(a)	VIII-1-01-106	BC01-521	838
UG-23(b)	VIII-1-83-92	BC82-756	54
	VIII-1-83-92R	BC82-756*	121
UG-23(c)	VIII-1-86-172	BC85-288	306
	VIII-1-01-70	BC01-380	821
UG-23(d)	VIII-1-86-225	BC88-053	334
	VIII-1-01-83	BC01-592	829
	VIII-1-04-16	BC03-1319	877
UG-24	VIII-1-89-119	BC89-228	402
	VIII-1-95-59	BC95-050	653
UG-25	VIII-1-83-228	BC82-824	130
UG-25(e)	VIII-1-89-255	BC90-655	467
	VIII-1-95-115	BC96-273	689
UG-25(f)	VIII-1-92-197	BC93-216	607
UG-27	VIII-1-83-95	BC82-787	56
	VIII-1-83-320	BC84-130	181
	VIII-1-86-65	BC86-237	246
	VIII-1-89-97	BC89-085	388
	VIII-1-89-164	BC89-411	427
UG-27(c)	VIII-1-92-31	BC91-517	518
UG-27(c)(1)	VIII-1-83-211	BC82-417	123
	VIII-1-89-14	BC87-297	349
	VIII-1-92-85	BC92-240	551
UG-28	VIII-1-83-233	BC83-356	132
	VIII-1-83-308	BC84-156	177
	VIII-1-86-107	BC85-447	268
	VIII-1-89-121	BC88-121	404
	VIII-1-95-13	BC94-131	628
Fig. UG-28.1; Note (2)	VIII-1-01-113	BC00-591	846
	VIII-1-98-111	BC00-083	782
UG-28 and U-2(g)	VIII-1-83-169	BC83-113	97
UG-28(f)	VIII-1-83-140	BC82-285	78
	VIII-1-83-142	BC83-168	79
UG-29	VIII-1-95-13	BC94-131	628
	VIII-1-98-04	BC96-475	717
	VIII-1-01-126	BC02-2744	850
UG-29(b)	VIII-1-89-275	BC91-011	482
	VIII-1-92-68	BC92-101	538
	VIII-1-92-198	BC92-219	609
UG-29(c)	VIII-1-83-68	BC82-308	39
	VIII-1-95-110	BC95-401	687
	VIII-1-04-24	BC03-1845	883
UG-30	VIII-1-83-325	BC84-545	183
	VIII-1-98-103	BC99-611	778
	VIII-1-01-126	BC02-2744	850
UG-31	VIII-1-83-362	BC85-559	205
UG-32	VIII-1-83-135	BC83-159	75
	VIII-1-83-172	BC83-256	98
	VIII-1-83-182	BC83-312	102
	VIII-1-83-215	BC83-404	125
	VIII-1-83-246	BC83-643	139

Location	Interpretation	File No.	Page No.
Part UG (Cont'd)			
UG-32 (Cont'd)			
	VIII-1-83-320	BC84-130	181
	VIII-1-86-49	BC86-069	239
	VIII-1-89-108	BC89-188	393
	VIII-1-92-31	BC91-517	518
UG-32(d)	VIII-1-86-174	BC86-417	307
	VIII-1-92-156	BC92-419	583
	VIII-1-01-57	BC01-288	815
	VIII-1-01-155	BC03-619	870
UG-32(e)	VIII-1-86-88	BC86-300	260
UG-32(g)	VIII-1-89-184	BC90-193	433
UG-32(j)	VIII-1-86-175	BC87-302	307
UG-32(l)	VIII-1-92-160	BC93-486	589
	VIII-1-89-209	BC90-482	448
UG-33	VIII-1-89-121	BC88-121	404
	VIII-1-98-04	BC96-475	717
	VIII-1-98-38	BC98-176	740
UG-33(a)	VIII-1-83-11	BC82-165	11
UG-34	VIII-1-83-113	BC83-033	66
	VIII-1-83-181	BC83-315	102
	VIII-1-83-195	BC83-007	109
	VIII-1-83-286	BC84-153	158
	VIII-1-83-327	BC84-592	184
	VIII-1-83-339	BC84-635	195
	VIII-1-83-363	BC84-643	206
	VIII-1-86-96	BC86-270	263
	VIII-1-86-178	BC87-391	308
	VIII-1-89-206	BC90-439	442
	VIII-1-92-195	BC93-670	607
	VIII-1-95-112	BC96-256	688
	VIII-1-98-31	BC98-174	737
	VIII-1-98-116	BC00-155 (BC00-267)	784
	VIII-1-01-78	BC01-407	827
	VIII-1-01-105	BC01-336	838
UG-34(a)	VIII-1-01-30	BC00-707	805
UG-34(b)	VIII-1-98-12	BC97-283	720
UG-34(c)(1)	VIII-1-98-03	BC96-105	716
	VIII-1-04-30	BC03-623	886
UG-34(c)(2)	VIII-1-83-323	BC84-429	182
	VIII-1-98-03	BC96-105	716
Fig. UG-34 sketch (e)	VIII-1-83-355	BC85-066	203
	VIII-1-98-65	BC99-100	754
Fig. UG-34 sketch (f)	VIII-1-01-30	BC00-707	805
Fig. UG-34 sketch (j)	VIII-1-01-109	BC01-801	840
Fig. UG-34 sketch (m)	VIII-1-01-107	BC01-651	839
Fig. UG-34 sketch (n)	VIII-1-86-106	BC86-381	267
UG-35	VIII-1-83-190	BC82-197	106
UG-35(b)	VIII-1-83-08	BC82-066	9
UG-35(d)	VIII-1-86-24	BC84-600	222
UG-36	VIII-1-83-195	BC83-007	109
	VIII-1-83-236	BC83-597	134
	VIII-1-83-262	BC84-053	147
	VIII-1-89-37	BC88-249	359
	VIII-1-95-94	BC95-473	677

Location	Interpretation	File No.	Page No.
Part UG (Cont'd)			
UG-36 (Cont'd)			
	VIII-1-98-08	BC97-262	718
UG-36 & Interpretation VIII-79-73	VIII-1-83-244	BC83-638	138
UG-36(a)	VIII-1-83-283	BC84-139	156
UG-36(b)(1)	VIII-1-89-276	BC91-014	483
	VIII-1-01-32	BC01-079	806
UG-36(b)(2)	VIII-1-83-14	BC82-191	12
UG-36(c)(3)	VIII-1-83-324	BC84-430	183
	VIII-1-86-155	BC87-183	299
	VIII-1-95-124	BC96-236	692
	VIII-1-98-02	BC95-461, BC96-533	716
	VIII-1-04-03	BC02-2796	873
UG-36(c)(3)(a), (b), and (c)	VIII-1-83-46	BC82-518	28
	VIII-1-89-120	BC89-231	403
	VIII-1-89-196	BC90-234	438
	VIII-1-89-196R	BC90-234*	475
	VIII-1-92-154	BC93-359	583
	VIII-1-98-03	BC96-105	716
UG-37	VIII-1-83-102	BC82-843	59
	VIII-1-83-179	BC83-306	101
	VIII-1-83-215	BC83-404	125
	VIII-1-83-359	BC85-138	204
	VIII-1-86-18	BC85-324	219
	VIII-1-86-65	BC86-237	246
	VIII-1-86-168	BC87-289	305
	VIII-1-86-229	BC88-085	336
	VIII-1-84-72	BC88-467	379
	VIII-1-89-149	BC89-304	416
	VIII-1-89-171	BC90-006	429
	VIII-1-89-233	BC90-490	457
	VIII-1-92-119	BC92-388	569
	VIII-1-95-123	BC96-227	692
	VIII-1-01-90	BC01-639	832
	VIII-1-04-04	BC03-991	873
UG-37(a)	VIII-1-92-05	BC91-292	506
	VIII-1-92-25	BC91-474	515
	VIII-1-92-25R	BC91-474*	605
	VIII-1-92-69	BC91-102	538
	VIII-1-92-69R	BC91-102*	538
	VIII-1-92-72	BC91-303	539
	VIII-1-98-117	BC00-156	784
	VIII-1-01-119	BC02-2318	848
	VIII-1-04-01	BC02-4117	873
Fig. UG-37	VIII-1-83-16	BC82-223	13
	VIII-1-01-90	BC01-639	832
	VIII-1-01-91	BC01-640	833
UG-37(b)	VIII-1-83-238	BC83-599	135
	VIII-1-83-240	BC83-602	135
	VIII-1-83-285	BC84-141	157
	VIII-1-83-290	BC84-174	160
	VIII-1-83-362	BC83-559	205
UG-37(c)	VIII-1-86-50	BC86-079	239
UG-37(d)	VIII-1-89-213	BC90-495	450
UG-37(d)(2)	VIII-1-92-116	BC90-657	563
Fig. UG-37.1	VIII-1-83-359	BC85-138	204

Location	Interpretation	File No.	Page No.
Part UG (Cont'd)			
Fig. UG-37.1 (Cont'd)			
	VIII-1-92-69	BC91-102	538
	VIII-1-92-69R	BC91-102*	538
UG-39	VIII-1-83-181	BC83-315	102
	VIII-1-83-195	BC83-007	109
	VIII-1-83-225	BC79-323	129
	VIII-1-95-94	BC95-473	677
	VIII-1-98-21	BC97-514	728
	VIII-1-01-105	BC01-336	838
UG-39(b)(1)	VIII-1-95-121	BC96-217	691
	VIII-1-01-20	BC00-696	801
UG-39(c)	VIII-1-83-286	BC84-153	158
UG-40	VIII-1-83-261	BC84-052	147
	VIII-1-86-18	BC85-324	219
	VIII-1-89-83	BC89-060	383
	VIII-1-89-313	BC90-470	497
	VIII-1-98-313R	BC90-470*	749
	VIII-1-92-42	BC91-089	529
	VIII-1-92-119	BC92-388	569
UG-40(b)	VIII-1-86-144	BC87-167	294
UG-40(c)(2)	VIII-1-92-17	BC91-268	512
UG-40(d)	VIII-1-83-240	BC83-602	135
	VIII-1-83-277	BC84-142	154
	VIII-1-83-332	BC84-115	192
UG-40(d)(3)	VIII-1-83-341	BC84-662	196
UG-41	VIII-1-83-284	BC84-140	157
	VIII-1-89-36	BC88-183	359
	VIII-1-89-49	BC88-221	365
	VIII-1-01-44	BC01-302	810
	VIII-1-01-125	BC96-381	850
Fig. UG-41.1	VIII-1-86-151	BC87-110	298
UG-42	VIII-1-83-94	BC82-784	55
	VIII-1-83-250	BC83-652A	141
	VIII-1-83-324	BC84-430	183
UG-42(a)	VIII-1-83-75	BC82-677	41
UG-42(e)	VIII-1-83-195	BC83-007	109
UG-43(d)	VIII-1-86-102	BC86-322	266
	VIII-1-89-215	BC90-291	450
	VIII-1-92-70	BC91-308	539
	VIII-1-98-102	BC99-599	778
	VIII-1-04-35	BC04-685	887
UG-43(e)	VIII-1-86-176	BC87-383	307
	VIII-1-89-122	BC86-380	405
	VIII-1-95-23	BC94-416	632
UG-43(f)	VIII-1-83-03	BC81-260	7
	VIII-1-83-232	BC83-355	132
UG-43(g)	VIII-1-95-125	BC96-249	692
UG-44	VIII-1-83-67	BC82-306	38
	VIII-1-83-257	BC84-032	145
	VIII-1-83-284	BC84-140	157
	VIII-1-89-204	BC90-435	441
	VIII-1-92-60	BC92-077	535
	VIII-1-95-140	BC96-373	704
	VIII-1-98-28	BC96-534	730
	VIII-1-98-95	BC98-230	775

Location	Interpretation	File No.	Page No.
Part UG (Cont'd)			
UG-44 (Cont'd)			
	VIII-1-01-45	BC01-303	810
UG-44(j)	VIII-1-01-132	BC02-2920	856
UG-45	VIII-1-83-66	BC82-294	38
	VIII-1-83-102	BC82-343	59
	VIII-1-83-120	BC83-030	68
	VIII-1-83-138	BC82-880	77
	VIII-1-83-184	BC83-328	103
	VIII-1-83-185	BC83-317	103
	VIII-1-83-199	BC83-226	111
	VIII-1-83-215	BC83-404	125
	VIII-1-83-217	BC83-544	125
	VIII-1-83-302	BC83-332	174
	VIII-1-83-312	BC84-361	179
	VIII-1-86-147	BC87-159	296
	VIII-1-98-08	BC97-262	718
	VIII-1-98-18	BC97-517	727
	VIII-1-98-118	BC00-157	785
	VIII-1-01-81	BC01-589	829
UG-45(b)	VIII-1-95-119	BC96-210	690
UG-45(b)(1)	VIII-1-95-133	BC95-353	701
	VIII-1-01-61	BC01-300	816
UG-45(c)	VIII-1-83-05	BC81-651	8
	VIII-1-83-239	BC83-600	135
	VIII-1-95-01	BC94-217	624
UG-46	VIII-1-83-170	BC83-208	98
	VIII-1-86-31	BC85-488	225
	VIII-1-89-93	BC89-078	386
	VIII-1-95-115	BC96-273	689
	VIII-1-04-15	BC03-1295	876
UG-46(a)	VIII-1-83-336	BC84-599	194
	VIII-1-95-46	BC94-679	648
UG-46(f)	VIII-1-83-336	BC84-599	194
	VIII-1-83-358	BC85-124	204
UG-46(f)(2)	VIII-1-83-264	BC84-071	148
	VIII-1-92-136	BC93-031	575
UG-46(f)(3)	VIII-1-01-148	BC03-176	867
UG-46(g)(1)	VIII-1-01-122	BC02-2562	849
UG-47	VIII-1-89-128	BC89-042	408
UG-53	VIII-1-83-324	BC84-430	183
	VIII-1-95-10	BC94-291	627
UG-53(g)	VIII-1-83-110	BC82-864	63
Fig. UG-53.6	VIII-1-83-110	BC82-864	63
UG-55	VIII-1-83-297	BC82-122	171
UG-55(a)	VIII-1-83-204	BC83-453	113
UG-76(c)	VIII-1-83-211	BC82-417	121
UG-77	VIII-1-86-101	BC86-320	265
	VIII-1-89-136	BC89-208	411
	VIII-1-98-44	BC98-242	742
UG-77(a)	VIII-1-83-19	BC82-258	14
	VIII-1-95-61	BC95-158	653
	VIII-1-98-30	BC97-405	737
UG-77(c)	VIII-1-86-97	BC86-273	263
	VIII-1-92-141	BC93-036	577

Location	Interpretation	File No.	Page No.
Part UG (Cont'd)			
UG-77(c) (Cont'd)			
	VIII-1-95-75	BC94-308	663
UG-78	VIII-1-83-134	BC83-151	75
	VIII-1-83-351	BC84-676	201
	VIII-1-89-202	BC90-388	440
	VIII-1-92-193	BC94-012	606
	VIII-1-95-65	BC94-067B	655
UG-79	VIII-1-83-122	BC82-549	69
	VIII-1-83-224	BC83-586	129
	VIII-1-89-74	BC88-472	380
UG-79(b)	VIII-1-86-198	BC87-108	321
UG-80	VIII-1-83-297	BC82-122	171
	VIII-1-89-121	BC88-121	404
UG-80(a)(1)	VIII-1-92-127	BC92-275	572
	VIII-1-95-78	BC94-111	665
UG-80(a)(2)	VIII-1-89-264	BC89-234	478
	VIII-1-89-296	BC91-051	490
UG-81(a)	VIII-1-89-67	BC88-163	377
	VIII-1-92-33	BC90-727	519
	VIII-1-92-79	BC92-150	542
	VIII-1-92-127	BC92-275	572
	VIII-1-92-156	BC92-419	583
UG-81(b)	VIII-1-83-149	BC83-036	88
UG-82	VIII-1-83-297	BC82-122	171
UG-82(b)	VIII-1-89-113	BC89-168	400
UG-84	VIII-1-83-58	BC81-609	34
	VIII-1-83-222	BC83-580	128
	VIII-1-86-123	BC87-074	280
	VIII-1-86-208	BC87-429	326
	VIII-1-89-16	BC88-081	350
	VIII-1-89-105	BC89-158	392
	VIII-1-92-175	BC93-638	594
	VIII-1-98-100	BC99-598	777
	VIII-1-01-25	BC01-056	803
UG-84(b)(2)	VIII-1-83-296	BC80-251	170
	VIII-1-86-14	BC85-294	218
	VIII-1-92-11	BC91-413	509
UG-84(c)(4)	VIII-1-89-290	BC90-342, BC90-442	488
UG-84(c)(6)	VIII-1-83-276	BC84-131	153
UG-84(e)(3)	VIII-1-89-321	BC90-441	500
UG-84(f)(2)	VIII-1-01-35	BC01-104	807
UG-84(g)(2)	VIII-1-89-267	BC89-253	479
	VIII-1-98-114	BC93-751	783
UG-84(g)(4)	VIII-1-92-129	BC92-404	573
UG-84(h)(2)(a)	VIII-1-95-06	BC94-292	626
UG-84(h)(2)(b)	VIII-1-92-221	BC94-110	617
UG-84(h)(2)(d)	VIII-1-89-142	BC89-235	413
UG-84(h)(3)	VIII-1-83-209	BC83-537	115
	VIII-1-83-263	BC84-057	147
	VIII-1-89-21	BC88-134	353
	VIII-1-92-108	BC92-334	560
UG-84(h)(3)(b)	VIII-1-92-51	BC88-434	532
UG-84(i)	VIII-1-83-38	BC82-357	24
	VIII-1-83-73	BC82-663	40
Part UG (Cont'd)			
UG-84(i) (Cont'd)			
	VIII-1-86-130	BC87-046	284
	VIII-1-86-213	BC88-010	329
	VIII-1-92-81	BC92-169	543
	VIII-1-01-110	BC01-843	840
UG-84(i)(1)	VIII-1-92-181	BC93-629	596
	VIII-1-92-206	BC94-072	611
	VIII-1-98-40	BC98-227	741
UG-84(i)(3)(a)(2)	VIII-1-95-60	BC95-157	653
UG-84(j)	VIII-1-95-20	BC94-496	631
UG-90	VIII-1-86-51	BC86-086	240
	VIII-1-86-51R	BC86-086*	253
	VIII-1-89-263	BC89-129	477
	VIII-1-92-106	BC92-304	559
UG-90(b)	VIII-1-89-250	BC90-725	465
UG-90(b)(2)	VIII-1-01-68	BC01-348	819
UG-90(b)(6)	VIII-1-86-129	BC87-045	283
	VIII-1-92-22	BC91-267	514
	VIII-1-98-92	BC99-496	773
	VIII-1-98-115	BC99-564	784
UG-90(b)(8)	VIII-1-83-134	BC83-151	75
	VIII-1-95-32	BC94-589	642
	VIII-1-95-32R	BC94-589*	661
UG-90(b)(9)	VIII-1-83-229	BC83-024	131
UG-90(b)(18)	VIII-1-01-68	BC01-348	819
UG-90(c)(1)	VIII-1-83-349	BC84-335	200
	VIII-1-86-19	BC85-326	220
	VIII-1-95-05	BC94-288	626
	VIII-1-98-35	BC98-229	739
UG-90(c)(1)(i)	VIII-1-86-42	BC86-591	236
	VIII-1-89-54	BC88-390	367
UG-90(c)(1)(I)	VIII-1-89-245	BC90-649	463
	VIII-1-98-36	BC98-241	739
UG-90(c)(1)(m)	VIII-1-95-108	BC96-099	682
UG-90(c)(2)	VIII-1-83-79	BC82-684	43
	VIII-1-83-349	BC84-335	200
	VIII-1-83-360	BC85-187	204
	VIII-1-86-113	BC86-522	277
	VIII-1-86-215	BC88-027	330
	VIII-1-89-94	BC89-081	387
	VIII-1-95-144	BC96-240	705
	VIII-1-95-147	BC96-472	706
	VIII-1-01-146	BC03-198	866
UG-91	VIII-1-92-179	BC93-590	596
UG-91(b)	VIII-1-95-30	BC94-584	641
UG-93	VIII-1-83-364	BC85-179	206
	VIII-1-89-71	BC88-459	379
	VIII-1-89-98	BC89-111	389
	VIII-1-89-146	BC89-251	415
	VIII-1-89-173	BC90-010	430
	VIII-1-89-181	BC90-226	432
	VIII-1-92-49	BC90-004	531
	VIII-1-98-115	BC99-564	784
UG-93(a)(1)	VIII-1-83-01	BC81-195	6
	VIII-1-89-116	BC89-204	401

Location	Interpretation	File No.	Page No.
Part UG (Cont'd)			
UG-93(a)(1) (Cont'd)			
	VIII-1-89-280	BC90-774	484
	VIII-1-92-189	BC93-034	599
	VIII-1-01-152	BC03-659	869
UG-93(a)(2)	VIII-1-89-02	BC88-122	343
UG-93(d)(2)	VIII-1-01-58	BC01-295	815
UG-93(d)(3)	VIII-1-83-52	BC80-514	30
	VIII-1-83-144	BC83-198	80
	VIII-1-83-161	BC83-268	94
	VIII-1-83-173	BC83-261	99
	VIII-1-83-298	BC82-827	172
	VIII-1-86-135	BC87-113	286
	VIII-1-89-180	BC90-025	432
	VIII-1-89-182	BC90-236	433
	VIII-1-92-04	BC91-283	506
	VIII-1-98-51	BC98-288	744
	VIII-1-98-120	BC00-268	785
UG-93(d)(4)	VIII-1-83-298	BC82-827	172
UG-96	VIII-1-92-106	BC92-304	559
UG-96(a)	VIII-1-83-229	BC83-024	131
UG-97	VIII-1-86-131	BC87-079	284
UG-98	VIII-1-92-71	BC91-177	539
	VIII-1-92-163	BC93-540	590
UG-99	VIII-79-13R	BC78-847*, BC81-433*	5
	VIII-81-89R	BC81-258*	6
	VIII-1-83-128	BC83-072	72
	VIII-1-83-260	BC84-051	146
	VIII-1-83-301	BC83-308	173
	VIII-1-86-66	BC86-238	246
	VIII-1-86-71	BC85-329	248
	VIII-1-86-122	BC86-505	280
	VIII-1-86-189	BC87-426	313
	VIII-1-89-51	BC88-363	366
	VIII-1-89-134	BC89-190	410
	VIII-1-89-281	BC90-787	485
	VIII-1-89-310	BC89-376	495
	VIII-1-92-65	BC92-124	537
	VIII-1-92-204	BC93-765	610
	VIII-1-01-55	BC01-226	814
	VIII-1-01-127	BC02-105a	850
UG-99(a)	VIII-1-89-27R	BC88-175*	356
	VIII-1-92-84	BC92-220	551
UG-99(b)	VIII-1-89-139	BC89-218	412
	VIII-1-98-86	BC99-346	766
	VIII-1-89-287	BC89-319	487
	VIII-1-95-27	BC94-414	640
	VIII-1-95-64	BC95-172	655
	VIII-1-95-93	BC95-420	676
	VIII-1-98-27	BC98-062	730
	VIII-1-01-23	BC00-084	802
	VIII-1-01-77	BC01-406	827
UG-99(c)	VIII-1-95-93	BC95-420	676
	VIII-1-98-86	BC99-346	766
UG-99(d)	VIII-1-83-287	BC84-154	158
Part UG (Cont'd)			
UG-99(d) (Cont'd)			
	VIII-1-01-88	BC01-635	831
UG-99(f)	VIII-1-92-115	BC92-389	562
	VIII-1-01-139	BC01-774	863
UG-99(g)	VIII-1-83-118	BC82-397	67
	VIII-1-89-57	BC88-412	368
	VIII-1-01-02	BC00-393	789
UG-99(g)(1)	VIII-1-01-26	BC01-81	803
UG-99(h)	VIII-1-89-211	BC90-480	449
	VIII-1-01-27	BC01-092	804
UG-99(j)	VIII-1-95-11	BC94-564	628
UG-100	VIII-1-83-121R	BC81-184*	168
	VIII-1-86-114	BC87-001	277
	VIII-1-92-65	BC92-124	537
	VIII-1-92-84	BC92-220	551
	VIII-1-92-204	BC93-765	610
	VIII-1-01-55	BC01-226	814
UG-100(a)	VIII-1-83-04	BC81-526	8
UG-100(a)(2)	VIII-1-86-77	BC86-254	255
UG-100(b)	VIII-1-01-23	BC00-084	802
UG-100(d)	VIII-1-01-139	BC01-774	863
UG-100(d)(1)	VIII-1-01-26	BC01-81	803
UG-101	VIII-1-83-308	BC84-156	177
	VIII-1-86-07	BC85-283	215
	VIII-1-89-309	BC87-382	495
	VIII-1-92-117	BC92-056	563
UG-101(a)(1)	VIII-1-83-333	BC84-125	192
UG-101(d)	VIII-1-01-65	BC01-333	818
UG-101(i)	VIII-1-92-91	BC92-239	554
UG-101(j)	VIII-1-92-196	BC93-734	607
UG-101(l)	VIII-1-95-114	BC96-215	688
	VIII-1-01-151	BC03-1035	868
UG-101(m)	VIII-1-83-245	BC83-642	139
	VIII-1-83-355	BC85-066	203
	VIII-1-92-140	BC93-052	577
	VIII-1-01-117	BC02-102a	847
UG-101(m)(2)(a)	VIII-1-95-43	BC94-666	646
UG-101(m)(2)(c)	VIII-1-89-257	BC90-772	467
UG-101(n)	VIII-1-86-156	BC87-189	300
UG-101(o)	VIII-1-01-151	BC03-1035	868
UG-102	VIII-1-83-243	BC83-633	137
	VIII-1-89-207	BC90-405	447
	VIII-1-89-207R	BC90-405*	447
UG-102(c)	VIII-1-89-294	BC91-056	489
UG-115	VIII-1-86-162	BC87-199	303
	VIII-1-89-183	BC90-239	433
UG-115(b)	VIII-1-89-238	BC90-464	459
	VIII-1-92-212	BC94-190	614
UG-116	VIII-1-83-142	BC83-168	79
	VIII-1-83-328	BC82-284	190
	VIII-1-86-47	BC85-607	238
	VIII-1-86-93	BC86-256	262
	VIII-1-86-110	BC86-202	269
	VIII-1-89-86	BC89-046	384
	VIII-1-89-86R	BC89-046*	550

Location	Interpretation	File No.	Page No.
Part UG (Cont'd)			
UG-116 (Cont'd)			
	VIII-1-89-193	BC90-393	437
	VIII-1-92-09	BC91-386	507
	VIII-1-92-09R	BC91-386*	508
	VIII-1-92-09R-2	BC91-386**	527
	VIII-1-92-48	BC92-005	531
	VIII-1-95-116	BC96-129	689
	VIII-1-95-144	BC96-240	705
	VIII-1-01-129	BC02-2791	855
UG-116(a)	VIII-1-86-223	BC88-049	333
	VIII-1-89-77	BC89-016	381
	VIII-1-89-151	BC89-269	417
UG-116(a)(1)(b)(4)	VIII-1-89-22	BC88-135	353
UG-116(a)(2)	VIII-1-01-103	BC01-724	837
UG-116(a)(3)	VIII-1-01-23	BC00-084	802
UG-116(a)(4)	VIII-1-89-228	BC90-427	455
	VIII-1-01-23	BC00-084	802
UG-116(a)(6)	VIII-1-92-08	BC91-310	507
UG-116(b)	VIII-1-86-206	BC87-069	325
UG-116(b)(1)	VIII-1-86-108	BC86-448	268
	VIII-1-95-17	BC94-411	630
	VIII-1-95-117	BC96-130	690
UG-116(c)	VIII-1-83-145	BC83-200	80
	VIII-1-83-269	BC84-105	150
	VIII-1-86-22	BC85-334	221
	VIII-1-92-98	BC92-319	556
	VIII-1-95-31	BC94-587	642
UG-116(e)	VIII-1-89-210	BC90-418	448
	VIII-1-89-210R	BC90-418*	475
	VIII-1-92-75	BC91-467	541
	VIII-1-92-159	BC93-481	589
	VIII-1-01-21	BC00-698	801
	VIII-1-01-150	BC03-454	868
UG-116(e)(1)	VIII-1-89-318	BC90-685	499
	VIII-1-92-40	BC92-036	528
UG-116(e)(2)	VIII-1-92-162	BC93-510	590
UG-116(e)(4)	VIII-1-89-101	BC89-115	390
	VIII-1-89-101R	BC89-115*	623
	VIII-1-89-224	BC90-543	453
	VIII-1-01-17	BC00-680	800
UG-116(f)	VIII-1-86-146	BC87-158	295
	VIII-1-86-148	BC87-162	296
UG-116(h)	VIII-1-92-145	BC93-113	579
	VIII-1-95-45	BC94-671	647
	VIII-1-95-47	BC94-412	648
	VIII-1-95-55	BC93-482	651
	VIII-1-95-148	BC96-522	706
	VIII-1-01-50	BC01-198	812
	VIII-1-01-75	BC01-377	826
UG-116(j)	VIII-1-92-75	BC91-467	541
	VIII-1-98-94	BC99-574	774
	VIII-1-01-100	BC01-644	836
UG-116(m)	VIII-1-83-170	BC83-208	98
	VIII-1-86-133	BC87-109	285
UG-116(n)(2)	VIII-1-83-111	BC83-022	63
UG-117(b)	VIII-1-95-106	BC95-465A	681
Part UG (Cont'd)			
UG-117(b) (Cont'd)			
	VIII-1-95-126	BC95-465B	693
	VIII-1-95-127	BC96-128	693
	VIII-1-95-127R	BC96-128*	715
UG-117(e)	VIII-1-92-203	BC94-059	610
UG-117(f)	VIII-1-01-53	BC01-222	813
UG-118	VIII-1-83-328	BC82-284	190
	VIII-1-92-53	BC91-384	533
	VIII-1-95-99	BC95-474	678
	VIII-1-04-32	BC03-777	886
UG-118(b)	VIII-1-92-113	BC92-355	562
UG-119	VIII-1-83-249	BC83-650	140
	VIII-1-83-328	BC82-284	190
	VIII-1-86-30	BC85-487	225
	VIII-1-89-193	BC90-393	437
	VIII-1-01-145	BC03-179	865
UG-119(c)	VIII-1-92-10	BC91-387	508
	VIII-1-92-190	BC93-145	605
	VIII-1-95-120	BC96-216	691
UG-119(c)(1)	VIII-1-83-251	BC83-661	141
	VIII-1-86-78	BC86-258	255
UG-119(e)	VIII-1-89-18R	BC88-106*	351
	VIII-1-95-81	BC93-736	666
UG-119(f)	VIII-1-92-13	BC91-210	510
UG-119(g)(1)	VIII-1-86-167	BC87-255	304
UG-120	VIII-1-83-17	BC82-238	13
	VIII-1-83-346	BC84-695	199
	VIII-1-86-82	BC85-320	257
	VIII-1-86-200	BC87-473	322
	VIII-1-89-153	BC89-281	417
	VIII-1-89-214	BC90-498	450
	VIII-1-95-144	BC96-240	705
UG-120(a)	VIII-1-83-44	BC82-509	27
	VIII-1-83-112	BC83-032	64
	VIII-1-89-177	BC90-021	431
	VIII-1-92-148	BC93-421	580
	VIII-1-92-179	BC93-590	596
UG-120(c)	VIII-1-86-34	BC85-503	226
	VIII-1-89-234	BC90-497	458
	VIII-1-92-105	BC92-295	559
	VIII-1-92-148	BC93-421	580
	VIII-1-95-12	BC94-056	628
	VIII-1-01-47	BC97-401	811
	VIII-1-01-50	BC01-198	812
	VIII-1-01-75	BC01-377	826
	VIII-1-01-149	BC03-458	867
	VIII-1-04-36	BC04-231	888
UG-120(d)	VIII-1-89-21	BC88-134	353
UG-125	VIII-1-83-29	BC81-268	20
	VIII-1-86-33	BC85-502	226
	VIII-1-89-312	BC90-343	496
	VIII-1-89-312R	BC90-343*	527
	VIII-1-92-94	BC92-116	555
	VIII-1-92-133	BC92-093	574
	VIII-1-98-17	BC97-443	727

Location	Interpretation	File No.	Page No.
Part UG (Cont'd)			
UG-125 (Cont'd)			
	VIII-1-01-10	BC98-291	793
	VIII-1-01-111	BC99-084	845
UG-125(a)	VIII-1-86-126	BC86-215	282
	VIII-1-89-117	BC89-205	402
	VIII-1-92-188	BC92-207	599
UG-125(b)	VIII-1-01-147	BC03-175	866
UG-125(c)	VIII-1-89-70	BC88-386	378
	VIII-1-89-304	BC91-012	493
	VIII-1-98-73	BC99-293	757
UG-125(c)(2)	VIII-1-01-94	BC01-649	834
UG-125(e)	VIII-1-83-243	BC83-633	137
	VIII-1-89-89	BC88-208	385
	VIII-1-98-06	BC96-259	717
UG-125(f)	VIII-1-95-79	BC94-620	665
UG-125(g)	VIII-1-98-06	BC96-259	717
	VIII-1-98-59	BC97-398	752
	VIII-1-98-64	BC97-280	754
UG-125(h)	VIII-1-83-27	BC80-198	18
UG-126	VIII-1-92-188	BC92-207	599
	VIII-1-95-36	BC93-637	644
	VIII-1-95-95	BC94-267	677
	VIII-1-01-13	BC00-679	794
UG-126(a)	VIII-1-04-40	BC04-583	890
UG-126(b)	VIII-1-89-262	BC89-109	476
	VIII-1-92-223	BC94-230	618
UG-127	VIII-1-83-51	BC82-405	30
	VIII-1-83-69	BC82-511	39
	VIII-1-86-157	BC87-190	300
	VIII-1-89-118	BC89-207	402
	VIII-1-92-43	BC91-560	529
UG-127(a)(3)	VIII-1-83-194	BC82-740	109
UG-127(a)(3)(b)	VIII-1-89-254	BC90-542	466
UG-127(a)(3)(b)(5)	VIII-1-95-143	BC95-489	705
UG-127(b)(4)	VIII-1-86-12	BC85-290	217
UG-129	VIII-1-83-51	BC82-405	30
	VIII-1-83-69	BC82-511	39
	VIII-1-86-57	BC86-199	242
	VIII-1-98-73	BC99-293	757
UG-129(a)	VIII-1-92-212	BC94-190	614
UG-129(e)	VIII-1-01-112	BC99-573	845
UG-131	VIII-1-83-106	BC79-720	61
	VIII-1-86-52	BC85-486	240
UG-131(d)(2)	VIII-1-83-197	BC83-039	110
UG-132	VIII-1-83-194	BC82-740	109
UG-133	VIII-1-86-33	BC85-502	226
UG-133(a)	VIII-1-01-102	BC01-702	837
UG-133(c)	VIII-1-92-150	BC93-112	581
	VIII-1-98-42	BC97-266	741
UG-133(d)	VIII-1-89-85	BC89-009	383
	VIII-1-92-111	BC92-351	561
	VIII-1-04-38	BC01-910	889
UG-134	VIII-1-83-350	BC84-602	201
UG-134(c)(4)	VIII-1-92-200	BC93-501A	609
UG-134(d)	VIII-1-83-28	BC80-607	19
Part UG (Cont'd)			
UG-134(d) (Cont'd)			
	VIII-1-89-315	BC90-631	498
UG-135	VIII-1-98-17	BC97-443	727
UG-135(b)	VIII-1-86-100	BC86-317	265
	VIII-1-92-67	BC92-055	537
	VIII-1-92-99	BC92-321	557
UG-135(b)(1)	VIII-1-01-16	BC00-676	799
UG-135(d)	VIII-1-04-13	BC03-1789	876
UG-135(d)(1)	VIII-1-04-38	BC01-910	889
UG-135(e)	VIII-1-83-27	BC80-198	18
UG-135(f)	VIII-1-01-16	BC00-676	799
UG-135(g)	VIII-1-83-28	BC80-607	19
UG-136	VIII-1-83-51	BC82-405	30
	VIII-1-83-197	BC83-039	110
	VIII-1-83-186R	BC83-071A*	121
UG-136(a)(2)	VIII-1-83-129	BC81-583	72
UG-136(a)(3)	VIII-1-83-27	BC80-198	18
	VIII-1-83-33	BC82-260	22
UG-136(a)(7)	VIII-1-83-280	BC83-591	155
UG-136(b)	VIII-1-01-96	BC01-701	835
UG-136(b)(2)	VIII-1-89-266	BC90-187	479
	VIII-1-92-177	BC93-583a	595
UG-136(b)(3)	VIII-1-86-205	BC86-378	325
	VIII-1-92-152	BC93-138	582
	VIII-1-01-11	BC00-047	793
	VIII-1-01-128	BC02-3595	855
UG-136(c)(3)	VIII-1-83-319	BC83-223C	181
UG-136(c)(3)(b)	VIII-1-83-278	BC82-860	154
UG-136(c)(4)(d)	VIII-1-89-303	BC90-864A	492
UG-136(c)(5)	VIII-1-04-26	BC03-1329	884
UG-136(d)	VIII-1-01-95	BC01-692	834
UG-136(d)(4)	VIII-1-95-97	BC91-445	678
UG-137(d)(3)	VIII-1-98-71	BC98-522	756
Part UHA			
. . .	VIII-1-01-27	BC01-092	804
UHA-1	VIII-1-86-187	BC87-424	312
	VIII-1-89-197	BC90-255	438
UHA-12	VIII-1-86-76	BC86-253	255
	VIII-1-86-76R	BC86-253*	275
	VIII-1-95-131	BC96-306	695
Table UHA-23	VIII-1-83-26	BC82-311	17
	VIII-1-83-47	BC82-519	28
	VIII-1-83-48	BC82-521	29
	VIII-1-83-163	BC81-576	95
	VIII-1-83-188	BC81-443	105
	VIII-1-89-237	BC90-627	459
	VIII-1-89-269	BC90-256	480
	VIII-1-92-87	BC92-249	552
	VIII-1-92-90	BC92-226	553
	VIII-1-95-90	BC93-109	675
UHA-32	VIII-1-83-119	BC82-411	68
UHA-32(e)	VIII-1-83-18	BC82-242	14
UHA-33(b)	VIII-1-86-16	BC85-321	219
UHA-42	VIII-1-98-75	BC99-107	763
UHA-51	VIII-1-83-89	BC83-685	53

Location	Interpretation	File No.	Page No.
Part UHA (Cont'd)			
UHA-51 (Cont'd)			
	VIII-1-83-117	BC82-305	67
	VIII-1-83-222	BC83-580	128
	VIII-1-83-279	BC83-318	155
	VIII-1-86-40	BC85-414	234
	VIII-1-89-68	BC88-176	377
	VIII-1-92-135	BC92-456	575
	VIII-1-95-103	BC96-201	680
	VIII-1-98-100	BC99-598	777
	VIII-1-04-34	BC04-056	887
UHA-51(b)	VIII-1-89-42	BC88-071	361
UHA-51(b)(5)	VIII-1-89-52	BC88-375	366
	VIII-1-89-218	BC90-520	451
UHA-51(b)(5)(a)(1)	VIII-1-83-09	BC82-127	9
UHA-51(b)(5)(b)	VIII-1-83-294	BC84-228	162
	VIII-1-89-130	BC89-127	408
	VIII-1-92-103	BC92-343	558
UHA-51(b)(5)(c)	VIII-1-92-35	BC91-100	519
UHA-51(c)	VIII-1-83-18	BC82-242	14
	VIII-1-01-56	BC01-285	814
UHA-51(g)	VIII-1-95-155	BC96-409	709
	VIII-1-98-50	BC98-425	744
	VIII-1-98-98	BC99-596	776
UHA-52(b)	VIII-1-89-319	BC91-055	499
UHA-102	VIII-1-83-335	BC84-384	193
Part UHT			
UHT-6	VIII-1-01-137	BC99-102	862
UHT-17	VIII-1-83-35	BC82-273	23
UHT-18	VIII-1-83-206	BC83-463	114
	VIII-1-86-26	BC85-466	223
	VIII-1-89-260	BC90-732	468
UHT-18(b)	VIII-1-89-87	BC85-600	384
UHT-28	VIII-1-89-260	BC90-732	468
UHT-34	VIII-1-89-78	BC89-018	381
UHT-57	VIII-1-83-306	BC83-592	176
UHT-79	VIII-1-83-224	BC83-586	129
Part UHX			
Part UHX	VIII-1-04-41	BC04-864	890
	VIII-1-04-28	BC04-043	885
Fig. UHX-11.2	VIII-1-04-19	BC03-1648	878
UHX-11.3	VIII-1-04-23	BC03-1825	879
Fig. UHX-11.3	VIII-1-04-19	BC03-1648	878
Part ULT			
Table ULT-23	VIII-1-01-29	BC01-094	804
ULT-27	VIII-1-01-29	BC01-094	804
ULT-99	VIII-1-01-69	BC01-361	820
Part ULW			
Part ULW	VIII-1-83-334	BC84-334	193
	VIII-1-86-59	BC86-201	243
ULW-16(b)	VIII-1-83-151	BC82-652	89
ULW-52(a)	VIII-1-86-21	BC85-330	220
ULW-54(a)	VIII-1-86-21	BC85-330	220

Location	Interpretation	File No.	Page No.
Part UNF			
UNF-8	VIII-1-83-121	BC81-184	69
UNF-19	VIII-1-83-35	BC82-273	23
UNF-19(b)	VIII-1-83-178	BC83-304	101
UNF-23	VIII-1-83-152	BC83-167	90
Table UNF-23.2	VIII-1-83-121	BC81-184	69
	VIII-1-83-304	BC83-538	175
UNF-56	VIII-1-04-17	BC03-1320	877
UNF-57	VIII-1-01-21	BC00-698	801
UNF-57(c)	VIII-1-83-80	BC82-719	43
UNF-58(a), (b)	VIII-1-92-171	BC92-453	593
UNF-58(c)	VIII-1-98-107	BC99-608	780
UNF-95	VIII-1-83-74	BC82-664	41
Part UW			
UW-2	VIII-1-83-10	BC82-164	10
	VIII-1-83-35	BC82-273	23
	VIII-1-83-160	BC83-034	94
	VIII-1-83-222	BC83-580	128
	VIII-1-01-118	BC02-106a	847
UW-2(a)	VIII-1-83-77	BC82-679	42
	VIII-1-83-77R	BC82-679*	549
	VIII-1-83-207	BC83-464	114
	VIII-1-92-92	BC92-246	554
	VIII-1-92-112	BC92-352	561
	VIII-1-92-211	BC94-180	613
	VIII-1-95-137	BC96-334	703
	VIII-1-98-91	BC99-478	773
	VIII-1-01-14	BC00-598	794
UW-2(a)(1)	VIII-1-86-84	BC86-286	258
	VIII-1-92-24	BC91-455	515
UW-2(a)(1)(b)	VIII-1-92-194	BC93-684	606
UW-2(a)(1)(c)	VIII-1-95-138	BC96-341A	703
	VIII-1-98-07	BC96-341b	718
UW-2(a)(1)(d)	VIII-1-98-113	BC00-100	783
UW-2(a)(4)	VIII-1-04-43	BC04-1043	891
UW-2(b)	VIII-1-83-89	BC83-685	53
	VIII-1-83-117	BC82-305	67
	VIII-1-83-294	BC84-228	162
	VIII-1-89-218	BC90-520	451
	VIII-1-92-77	BC91-629	542
	VIII-1-92-77R	BC91-629*	549
UW-2(c)	VIII-1-89-45	BC88-139	362
	VIII-1-89-156	BC88-052	419
	VIII-1-92-114	BC92-376	562
	VIII-1-95-154	BC96-525	708
	VIII-1-98-97	BC99-522	775
	VIII-1-98-119	BC00-242	785
UW-2(d)(2)	VIII-1-98-63	BC97-282	753
UW-3	VIII-1-83-10	BC82-164	10
	VIII-1-83-177	BC83-286	100
	VIII-1-83-182	BC83-312	102
	VIII-1-83-187	BC79-246	105
	VIII-1-86-08	BC85-284	216
	VIII-1-89-33	BC88-245	358
	VIII-1-98-62	BC98-510	753

Location	Interpretation	File No.	Page No.
Part UW (Cont'd)			
UW-3 (Cont'd)			
	VIII-1-01-120	BC02-2681	848
UW-3(a)(1)	VIII-1-92-30	BC91-468	517
	VIII-1-92-30R	BC91-468*	623
UW-3(a)(2)	VIII-1-98-61	BC98-505	753
UW-3(a)(3)	VIII-1-95-04	BC94-287	625
UW-4(b)	VIII-1-92-172	BC92-460	593
UW-5	VIII-1-83-297	BC82-122	171
UW-5(b)	VIII-1-92-89	BC92-216	553
UW-5(b)(2)	VIII-1-89-311	BC90-237	496
	VIII-1-92-56	BC91-475	534
UW-9	VIII-1-86-184	BC87-387	311
UW-9(c)	VIII-1-83-193	BC82-739	108
	VIII-1-83-195	BC83-007	109
	VIII-1-92-45	BC91-567	530
	VIII-1-01-80	BC01-411	828
UW-9(d)	VIII-1-83-78	BC82-683	42
	VIII-1-83-159	BC83-262	93
	VIII-1-86-73	BC85-189	253
	VIII-1-86-199	BC87-475	321
	VIII-1-89-195	BC90-400	437
	VIII-1-95-53	BC95-049	651
UW-9(e)	VIII-1-98-60	BC97-404	752
UW-10	VIII-1-83-155	BC83-197	91
UW-11	VIII-1-83-62	BC81-685B	36
	VIII-1-83-122	BC82-549	69
	VIII-1-83-186R	BC83-071A*	121
	VIII-1-83-272	BC84-116	152
	VIII-1-89-104	BC89-126	391
	VIII-1-92-153	BC93-358	582
	VIII-1-98-09	BC97-263	719
	VIII-1-98-09R	BC03-268*	861
UW-11(a)	VIII-1-89-191	BC90-350	436
	VIII-1-89-227	BC90-412	455
	VIII-1-01-63	BC01-315	817
UW-11(a)(1), (4), and (5)	VIII-1-83-64	BC82-125	37
	VIII-1-86-139	BC85-152	288
UW-11(a)(2)	VIII-1-95-146	BC96-376	706
UW-11(a)(5)	VIII-1-95-105	BC96-104	681
	VIII-1-95-156	BC96-336	709
	VIII-1-04-14	BC03-1657	876
UW-11(a)(5)(b)	VIII-1-83-231	BC83-235	132
	VIII-1-86-159	BC87-192	301
	VIII-1-89-224	BC90-543	453
	VIII-1-92-32	BC91-518	518
	VIII-1-98-109	BC00-081	781
	VIII-1-01-89	BC01-636	832
	VIII-1-01-135	BC02-4115	857
	VIII-1-01-150	BC03-454	868
	VIII-1-04-06	BC03-455	874
UW-11(a)(6)	VIII-1-89-129	BC89-118	408
UW-11(a)(7)	VIII-1-83-45	BC82-513	27
	VIII-1-83-50	BC82-624	29
	VIII-81-16R	BC81-019*, BC83-018	167
	VIII-1-95-156	BC96-336	709
UW-11(b)	VIII-1-83-22	BC82-289	16
	VIII-1-89-224	BC90-543	453
	VIII-1-92-82	BC92-171	544
UW-11(d)	VIII-1-89-299	BC91-050	491
UW-11(e)	VIII-1-95-157	BC96-337, BC96-368	710
UW-12	VIII-1-83-02	BC81-213	7
	VIII-1-83-42	BC82-416	26
	VIII-1-83-63	BC82-027	36
	VIII-1-83-152	BC83-167	90
	VIII-1-83-171	BC83-212	98
	VIII-1-83-177	BC83-286	100
	VIII-1-83-180	BC83-311	101
	VIII-1-83-196	BC83-019	110
	VIII-1-83-246	BC83-643	139
	VIII-1-83-268	BC84-102	149
	VIII-1-83-290	BC84-174	160
	VIII-1-83-291	BC84-191	161
	VIII-1-83-320	BC84-130	181
	VIII-1-83-362	BC83-559	205
	VIII-1-86-08	BC85-284	216
	VIII-1-86-177	BC87-390	308
	VIII-1-86-179	BC87-073	309
Table UW-12	VIII-1-83-02	BC81-213	7
	VIII-1-83-11	BC82-165	11
	VIII-1-83-63	BC82-027	36
	VIII-1-83-113	BC83-033	66
	VIII-1-83-124	BC82-842	70
	VIII-1-83-220	BC83-557	127
	VIII-1-83-265	BC84-087	148
	VIII-1-83-267	BC84-090	149
	VIII-1-86-10	BC85-286	216
	VIII-1-86-180	BC87-203	309
	VIII-1-89-04	BC88-124	344
	VIII-1-89-64	BC88-429	371
	VIII-1-89-67	BC88-163	377
	VIII-1-89-159	BC89-331	420
	VIII-1-89-189	BC90-306	435
	VIII-1-89-201	BC90-326	440
	VIII-1-92-97	BC92-310	556
	VIII-1-92-107	BC92-317	560
	VIII-1-92-138	BC93-110	576
	VIII-1-92-158	BC93-460	584
	VIII-1-92-165	BC93-397	591
	VIII-1-95-40	BC94-569	645
	VIII-1-95-41	BC94-576	646
	VIII-1-95-67	BC95-170	656
	VIII-1-01-154	BC02-3288	883
UW-12(c)	VIII-1-83-07	BC81-664	9
	VIII-1-83-203	BC83-429	113
	VIII-1-83-254R	BC83-664*	168
	VIII-1-83-07R	BC81-664*	189

Location	Interpretation	File No.	Page No.
Part UW (Cont'd)			
UW-12(c) (Cont'd)			
	VIII-1-86-68	BC85-208	247
	VIII-1-86-203	BC86-196	324
	VIII-1-86-218	BC88-043	331
	VIII-1-89-144	BC89-240	414
UW-12(d)	VIII-1-86-181	BC87-245	310
	VIII-1-89-210	BC90-418	448
	VIII-1-89-210R	BC90-418*	475
	VIII-1-92-32	BC91-518	518
	VIII-1-01-63	BC01-315	817
	VIII-1-01-135	BC02-4115	857
UW-12(e)	VIII-1-01-89	BC01-636	832
	VIII-1-01-135	BC02-4115	857
UW-13	VIII-1-83-198	BC83-139	111
	VIII-1-86-90	BC85-225	260
	VIII-1-86-96	BC86-270	263
UW-13(a)(2)	VIII-1-83-72	BC82-593	40
UW-13(b)(2)	VIII-1-95-100	BC95-480	679
UW-13(b)(4)	VIII-1-89-221	BC90-510	452
	VIII-1-92-160	BC93-486	589
UW-13(b)(4)(b)	VIII-1-89-222	BC90-523	453
	VIII-1-89-230	BC90-440	456
UW-13(c)	VIII-1-86-226	BC88-076	335
UW-13(d)	VIII-1-83-357	BC85-096	203
UW-13(e)	VIII-1-83-144	BC83-198	80
	VIII-1-98-62	BC98-510	753
UW-13(e)(3)	VIII-1-98-77	BC99-363	763
UW-13(e)(4)	VIII-1-89-285	BC91-048	486
UW-13(g)	VIII-1-86-26	BC85-466	223
UW-13(g)(1)	VIII-1-83-292	BC84-192	161
Fig. UW-13.1 sketch (a)	VIII-1-95-67	BC95-170	656
	VIII-1-95-100	BC95-480	679
	VIII-1-98-60	BC97-404	752
Fig. UW-13.1 sketch (b)	VIII-1-89-38	BC88-389	360
FIg. UW-13.1 sketch (e)	VIII-1-98-60	BC97-404	752
Fig. UW-13.1 sketch (f)	VIII-1-83-132	BC82-298	74
	VIII-1-89-172	BC90-009	429
	VIII-1-92-210	BC94-134	613
Fig. UW-13.1 sketch (g)	VIII-1-92-02	BC90-684	505
Fig. UW-13.1 sketch (k)	VIII-1-83-57	BC81-404	33
	VIII-1-92-19	BC91-171	512
	VIII-1-92-86	BC92-248	552
	VIII-1-01-40	BC01-199	808
Fig. UW-13.1 sketch (l)	VIII-1-86-221	BC87-042	332
	VIII-1-95-135	BC96-258	702
Fig. UW-13.1 sketch (m)	VIII-1-95-135	BC96-258	702
Fig. UW-13.1 sketch (n)	VIII-1-83-140	BC82-285	78
	VIII-1-98-85	BC99-300	766
Fig. UW-13.1 sketches (n) and (o)	VIII-1-83-72	BC82-593	40
	VIII-1-86-202	BC87-408	323
	VIII-1-92-185	BC93-650	598
Fig. UW-13.2	VIII-1-01-05	BC00-502	791
	VIII-1-04-42	BC04-1015	891
Fig. UW-13.2 sketches (b) and (c)	VIII-1-95-08	BC94-221	627
	VIII-1-95-139	BC96-354	703
	VIII-1-98-78	BC99-359	764
	VIII-1-01-140	BC02-2305	863
Fig. UW-13.2 sketch (d)	VIII-1-89-158	BC89-313	419
	VIII-1-92-128	BC92-383	572
	VIII-1-98-26	BC97-508A	730
	VIII-1-04-05	BC03-1206	874
Fig. UW-13.2 sketch (e)	VIII-1-92-112	BC92-352	561
Fig. UW-13.2 sketch (g)	VIII-1-89-219	BC88-466	452
	VIII-1-89-285	BC91-048	486
Fig. UW-13.2 sketch (h)	VIII-1-89-302	BC90-433	492
Fig. UW-13.2 sketch (i)	VIII-1-01-24	BC01-045	803
Fig. UW-13.2 sketch (m)	VIII-1-89-227	BC90-412	455
Fig. UW-13.2 sketch (q)	VIII-1-89-40	BC87-218	360
Fig. UW-13.3	VIII-1-98-69	BC99-271	755
	VIII-1-01-42	BC01-225	809
	VIII-1-01-67	BC01-301	819
Fig. UW-13.3 sketch (a)	VIII-1-95-04	BC94-287	625
	VIII-1-98-34	BC98-225	738
	VIII-1-98-78	BC99-359	764
Fig. UW-13.3 sketch (b)	VIII-1-95-18	BC92-326	630
	VIII-1-98-78	BC99-359	764
	VIII-1-01-18	BC00-688	800
	VIII-1-01-31	BC01-074	805
Fig. UW-13.4	VIII-1-86-05	BC85-229	214
UW-14	VIII-1-83-208	BC83-465	115
	VIII-1-83-262	BC84-053	147
UW-14(d)	VIII-1-98-46	BC98-293	743
UW-15	VIII-1-83-284	BC84-140	157
	VIII-1-89-208	BC90-467	448
	VIII-1-92-192	BC93-717	606
	VIII-1-92-205	BC93-775	611
	ViII-1-92-205R	BC93-775*	639
	VIII-1-01-44	BC01-302	810
UW-15(b)	VIII-1-83-239	BC83-600	135
UW-15(c)	VIII-1-95-42	BC94-577	646
UW-15(d)	VIII-1-95-151	BC96-526	707
UW-16	VIII-1-83-160	BC83-034	94
	VIII-1-83-219	BC83-556	126
	VIII-1-86-18	BC85-324	219
	VIII-1-86-89	BC84-169	260
	VIII-1-89-61	BC88-424	370
	VIII-1-95-112	BC96-256	688
Fig. UW-16	VIII-1-83-211	BC82-417	123
	VIII-1-83-219	BC83-556	126
UW-16(b)	VIII-1-83-277	BC84-142	154
	VIII-1-89-272	BC90-792	481
	VIII-1-92-72	BC91-303	539
	VIII-1-92-178	BC93-588	595
	VIII-1-01-01	BC00-388	789
UW-16(c)	VIII-1-83-76	BC82-678	42
	VIII-1-86-149	BC87-168	297
	VIII-1-01-34	BC01-098	806
UW-16(c)(2)	VIII-1-86-83	BC85-465	257
UW-16(d)	VIII-1-83-88	BC82-845	52

Location	Interpretation	File No.	Page No.
Part UW (Cont'd)			
UW-16(d) (Cont'd)			
	VIII-1-95-89	BC95-472	669
UW-16(d)(1)	VIII-1-04-12	BC03-1585	875
UW-16(e)(2)	VIII-1-92-170	BC93-489	593
UW-16(f)	VIII-1-83-55	BC81-269	32
	VIII-1-83-61	BC81-661	35
	VIII-1-89-13	BC87-254	348
	VIII-1-92-96	BC91-080	556
	VIII-1-92-130	BC92-459	573
UW-16(f)(3)(a)	VIII-1-83-284	BC84-140	157
	VIII-1-86-86	BC86-293	259
	VIII-1-89-192	BC90-359	436
	VIII-1-89-220	BC89-161	452
	VIII-1-98-29	BC97-267	731
UW-16(f)(5)	VIII-1-92-192	BC93-717	606
Fig. UW-16.1	VIII-1-83-13	BC82-180	12
	VIII-1-83-34	BC82-264	23
	VIII-1-83-76	BC82-678	42
	VIII-1-83-275	BC84-129	153
	VIII-1-83-274R	BC84-128*	169
	VIII-1-86-05	BC85-229	214
	VIII-1-86-89	BC84-169	260
	VIII-1-98-23	BC97-522	729
	VIII-1-01-01	BC00-388	789
Fig. UW-16.1 sketch (a)	VIII-1-83-272	BC84-116	152
Fig. UW-16.1 sketch (d)	VIII-1-92-112	BC92-352	561
Fig. UW-16.1 sketch (g)	VIII-1-89-123	BC87-295	405
Fig. UW-16.1 sketch (h)	VIII-1-89-05	BC88-128	344
Fig. UW-16.1 sketch (k)	VIII-1-83-402	BC82-402	25
Fig. UW-16.1 sketch (v)	VIII-1-86-61	BC86-212	244
	VIII-1-92-28	BC91-530	517
Fig. UW-16.1 sketch (w)	VIII-1-92-170	BC93-489	593
UW-19	VIII-1-89-55	BC88-392	368
	VIII-1-89-253	BC90-484	466
	VIII-1-92-143	BC93-105	578
	VIII-1-98-107	BC99-608	780
UW-20(a)	VIII-1-95-91	BC94-664	676
UW-20(b)	VIII-1-89-267	BC89-253	479
UW-20(c)	VIII-1-95-91	BC94-664	676
UW-26	VIII-1-86-192	BC85-094B	319
	VIII-1-89-79	BC89-027	381
	VIII-1-01-142	BC02-2428	864
UW-26(d)	VIII-1-89-247	BC90-689	464
	VIII-1-89-247R	BC02-2474*	861
	VIII-1-92-167	BC93-411	592
UW-27	VIII-1-83-146	BC80-038C	81
	VIII-1-86-81	BC86-334	256
UW-27(a)	VIII-1-86-141	BC87-172	293
UW-27(b)	VIII-1-86-74	BC86-251	254
UW-28	VIII-1-83-54	BC81-064	31
	VIII-1-83-295	BC84-259	162
	VIII-1-86-210	BC87-496	327
	VIII-1-89-26	BC88-165	355
	VIII-1-89-32	BC88-202	358
UW-28(b)	VIII-1-92-26	BC91-229	516
UW-28(c)(2)	VIII-1-83-312	BC84-340	178
UW-28(c)(2) (Cont'd)			
	VIII-1-83-312R	BC84-340*	190
UW-29	VIII-1-89-26	BC88-165	355
	VIII-1-89-188	BC88-426C	435
UW-29(a)	VIII-1-01-51	BC01-215	813
UW-31	VIII-1-83-54	BC81-064	31
	VIII-1-83-147	BC80-173	81
UW-31(c)	VIII-1-83-93	BC82-783	55
	VIII-1-83-331	BC83-324, BC83-384	192
	VIII-1-92-110	BC92-349	561
	VIII-1-92-214	BC94-179	614
	VIII-1-95-113	BC96-276	688
UW-31(d)	VIII-1-86-104	BC86-372	267
	VIII-1-86-111	BC86-512	275
	VIII-1-86-212	BC88-008	329
	VIII-1-01-85	BC01-325	830
UW-32(a)	VIII-1-86-04	BC85-227	214
UW-33	VIII-1-86-63	BC86-245	245
	VIII-1-86-111	BC86-512	275
	VIII-1-86-183	BC87-385	311
	VIII-1-86-212	BC88-008	329
	VIII-1-89-179	BC90-262	432
	VIII-1-89-264	BC89-234	478
	VIII-1-98-106	BC99-595	779
	VIII-1-04-07	BC03-933	874
UW-33(a)	VIII-1-83-140	BC82-285	78
	VIII-1-98-85	BC99-300	766
	VIII-1-01-85	BC01-325	830
UW-34	VIII-1-01-71	BC01-412	822
UW-35	VIII-1-83-36	BC82-309	24
	VIII-1-83-137	BC82-782	76
	VIII-1-83-143	BC82-222	79
	VIII-1-83-183	BC83-314	102
	VIII-1-86-63	BC86-234	245
	VIII-1-86-217	BC88-029	330
	VIII-1-89-109	BC89-159	399
	VIII-1-89-297	BC91-168	490
UW-35(a)	VIII-1-92-165	BC93-397	591
UW-35(a)(2)	VIII-1-86-39	BC85-610	234
UW-35(b)	VIII-1-95-51	BC95-046	650
UW-35(d)	VIII-1-89-43	BC88-080	362
	VIII-1-92-151	BC93-114	582
	VIII-1-92-151R	BC93-114*	675
	VIII-1-92-174	BC93-604	594
UW-37	VIII-1-86-58	BC86-200	243
UW-37(a)	VIII-1-04-22	BC03-1492	879
UW-38	VIII-1-83-344	BC84-675	198
	VIII-1-92-27	BC91-516	516
	VIII-1-89-88	BC86-519	384
	VIII-1-95-83	BC95-389	667
UW-39	VIII-1-83-255	BC83-683	144
UW-39(b)	VIII-1-92-161	BC93-513	590
UW-40	VIII-1-83-30	BC82-166	21
	VIII-1-83-315	BC84-385	179

Location	Interpretation	File No.	Page No.
Part UW (Cont'd)			
UW-40 (Cont'd)			
	VIII-1-89-186	BC90-305	434
	VIII-1-89-202	BC90-388	440
	VIII-1-95-116	BC96-129	689
UW-40(a)(3)	VIII-1-89-288	BC90-437	487
UW-40(a)(5)	VIII-1-89-229	BC90-438	456
	VIII-1-89-317	BC90-682	498
UW-40(a)(8)	VIII-1-01-52	BC01-216	813
UW-40(c)	VIII-1-98-11	BC97-275	719
	VIII-1-98-110	BC00-082	781
UW-40(f)	VIII-1-92-80	BC92-167	543
	VIII-1-95-96	BC95-164	677
UW-40(f)(5)(a)	VIII-1-95-134	BC96-255	701
UW-40(f)(5)(c)	VIII-1-95-37	BC93-735	644
UW-40(f)(6)	VIII-1-92-176	BC93-641	595
UW-42	VIII-1-83-27R	BC81-100*	18
	VIII-1-89-179	BC90-262	432
UW-46	VIII-1-83-347	BC84-589	199
UW-47	VIII-1-83-347	BC84-589	199
UW-50	VIII-1-86-44	BC85-593	237
	VIII-1-92-73	BC91-401	540
	VIII-1-92-204	BC93-765	610
UW-51	VIII-1-83-53	BC81-056	31
	VIII-1-83-62	BC81-685B	36
	VIII-1-83-85	BC82-811	51
	VIII-1-83-202	BC83-424	113
	VIII-1-83-241	BC83-603A	136
	VIII-1-83-272	BC84-116	152
	VIII-1-83-305	BC83-568	175
	VIII-1-86-43	BC85-592	236
	VIII-1-89-292	BC91-046	489
	VIII-1-98-87	BC99-457	767
UW-51(a)(1)	VIII-1-89-167	BC89-415	428
UW-51(a)(2)	VIII-1-04-21	BC03-1021	878
UW-51(a)(3)	VIII-1-83-158	BC83-210	93
UW-51(a)(3) (Cont'd)			
	VIII-1-86-19	BC85-326	220
UW-51(a)(3), Winter 1982 Addenda	VIII-1-83-156	BC83-201	92
UW-51(b)	VIII-1-83-133R	BC82-718*	87
	VIII-1-86-28	BC85-289	224
	VIII-1-89-251	BC90-743	465
	VIII-1-92-27	BC91-516	516
	VIII-1-92-34	BC91-007	519
UW-52	VIII-1-83-86	BC82-813	51
	VIII-1-83-101	BC82-840	58
	VIII-1-83-141	BC82-833	78
	VIII-1-83-196	BC83-019	110
	VIII-1-83-241	BC83-603A	136
	VIII-1-83-268	BC84-102	149
	VIII-1-83-305	BC83-568	175
	VIII-1-86-43	BC85-592	236
	VIII-1-92-32	BC91-518	518
	VIII-1-98-22	BC97-519	728
UW-52(b)(1)	VIII-1-83-360	BC85-187	204
	VIII-1-95-71	BC95-218	662
UW-52(b)(2)	VIII-1-83-90	BC82-737	53
	VIII-1-98-37	BC98-246	740
UW-52(b)(3)	VIII-1-95-87	BC95-463	669
UW-52(c)	VIII-1-83-248	BC83-649	140
	VIII-1-98-53	BC98-290	750
UW-52(c)(3)	VIII-1-98-14	BC96-477	726
UW-52(d)(2)	VIII-1-95-86	BC95-400	668
UW-52(d)(2)(c)	VIII-1-92-27	BC91-516	516
UW-75(c)	VIII-1-83-273	BC84-118	152
Statement of Policy	VIII-1-92-76	BC92-152	541

SUBJECT INDEX

Subject	Interpretation	File No.	Page No.
Attachments			
caps	VIII-1-83-226	BC81-301	129
closing plugs	VIII-1-83-264	BC84-071	148
couplings	VIII-1-83-217	BC83-544	125
drilled holes	VIII-1-98-102	BC99-599	778
flanges (*see separate listing*)			
flat heads	VIII-1-04-05	BC03-1206	874
head-to-shell	VIII-1-86-226	BC88-076	335
	VIII-1-89-158	BC89-313	419
	VIII-1-92-02	BC90-684	505
	VIII-1-95-100	BC95-480	679
	VIII-1-01-30	BC00-707	805
lifting	VIII-1-01-43	BC01-276	809
loadings on	VIII-1-83-52	BC80-514	30
nonpressure	VIII-1-92-83	BC92-173	544
nozzles (*see separate listing*)			
pad type connection	VIII-1-83-262	BC84-053	147
pipe	VIII-1-89-122	BC86-380	405
pipe	VIII-1-89-215	BC90-291	450
pressure	VIII-1-92-185	BC93-650	598
pressure gages	VIII-1-83-243	BC83-633	137
recording of nonpressure	VIII-1-83-70	BC82-529	39
screwed	VIII-1-83-13	BC82-180	12
	VIII-1-83-274R	BC84-128*	169
	VIII-1-83-358	BC85-124	204
thermocouple	VIII-1-92-01	BC90-235	505
tubesheet	VIII-1-01-24	BC01-045	803
welded	VIII-1-83-55	BC81-269	32
	VIII-1-89-123	BC87-295	405
	VIII-1-89-174	BC90-012	430
	VIII-1-89-192	BC90-359	436
	VIII-1-89-230	BC90-440	456
	VIII-1-89-272	BC90-792	481
	VIII-1-89-285	BC91-048	486
	VIII-1-92-41	BC91-044	529
	VIII-1-92-192	BC93-717	606
	VIII-1-01-01	BC00-388	789
	VIII-1-01-34	BC01-098	806
	VIII-1-01-40	BC01-199	808
Authorized Inspector			
examination	VIII-1-86-131	BC87-079	284
	VIII-1-95-05	BC94-288	626
	VIII-1-98-36	BC98-241	739
multiple duplicate vessels	VIII-1-86-113	BC86-522	277
National Board Commission Number	VIII-1-89-81	BC89-039	382
radiography	VIII-1-86-42	BC85-591	236
responsibilities	VIII-1-95-30	BC94-584	641
	VIII-1-98-35	BC98-229	739
	VIII-1-98-92	BC99-496	773
surface examination	VIII-1-86-51	BC86-086	240
	VIII-1-86-51R	BC86-086*	253
use of multiple	VIII-1-86-72	BC86-230	248
	VIII-1-01-149	BC03-458	867
verification of computer programs	VIII-1-86-64	BC86-236	245
verification of procedures	VIII-1-92-131	BC93-029	573
Boilers			
kettle type reboilers	VIII-1-83-153	BC83-169	90
unfired steam	VIII-1-83-104	BC79-780	60
Bolting			
circle center line	VIII-1-83-173	BC83-261	99
connections	VIII-1-83-314	BC84-379	179
holes	VIII-1-83-173	BC83-261	99
materials	VIII-1-83-48	BC82-521	28
	VIII-1-83-310	BC84-266	178
	VIII-1-86-76R	BC86-253*	275
size	VIII-1-89-107	BC89-185	392
stress values	VIII-1-83-128	BC83-072	72
studs	VIII-1-83-109	BC82-095	63
Braced Surfaces	VIII-1-89-128	BC89-042	408
Bracing			
by non-Certificate Holder	VIII-1-83-312R	BC84-340*	190
filler metals	VIII-1-86-228	BC88-083	335
	VIII-1-89-103	BC89-125	391
Burst Test	VIII-1-89-257	BC90-772	467
	VIII-1-95-43	BC94-666	646
Calibration	VIII-1-89-294	BC91-056	489
Castings	VIII-1-89-119	BC89-228	402
	VIII-1-89-169	BC90-003	428

Subject	Interpretation	File No.	Page No.
Castings (Cont'd)			
	VIII-1-89-202	BC90-388	440
	VIII-1-92-03	BC91-230	505
	VIII-1-92-61	BC92-098	535
	VIII-1-95-59	BC95-050	653
Certification	VIII-1-95-106	BC95-465A	681
	VIII-1-95-126	BC95-465B	693
	VIII-1-95-127	BC96-128	693
Clad Construction			
impact testing	VIII-1-83-58R	BC81-609*	167
overlays	VIII-1-83-36	BC82-309	24
	VIII-1-83-107	BC82-169	62
	VIII-1-83-205	BC83-461	114
	VIII-1-83-287	BC84-154	158
repairs	VIII-1-83-191	BC82-221	107
Clamp Connections			
design	VIII-1-89-25	BC88-164	354
	VIII-1-89-226	BC90-545	454
	VIII-1-92-209	BC94-134	613
	VIII-1-98-32	BC98-177	738
fabrication	VIII-1-98-67	BC99-083	755
requirements	VIII-1-04-11	BC01-279	875
Closures			
flat circular	VIII-1-89-200	BC90-325	439
	VIII-1-89-200R	BC90-325*	440
locking mechanisms	VIII-1-83-08	BC82-066	9
noncircular vessels	VIII-1-83-363	BC84-643	206
quick opening	VIII-1-83-08	BC82-066	9
	VIII-1-86-24	BC84-600	222
	VIII-1-89-48	BC88-212	364
Code Cases	VIII-1-98-41	BC98-327	741
Construction			
economizer	VIII-1-01-147	BC03-175	866
pressure vessel	VIII-1-01-146	BC03-198	866
Corrosion			
allowance	VIII-1-83-228	BC82-824	130
	VIII-1-86-46	BC85-605	238
	VIII-1-89-37	BC88-249	359
	VIII-1-89-126	BC88-242	407
	VIII-1-92-197	BC93-716	607
	VIII-1-95-115	BC96-273	689
	VIII-1-98-28	BC96-534	730
	VIII-1-01-81	BC01-589	829
	VIII-1-01-116	BC01-912	847
coating	VIII-1-89-266	BC90-187	479
of welds	VIII-1-83-31	BC82-196	22
Covers			
bolted	VIII-1-83-170	BC83-208	98

Subject	Interpretation	File No.	Page No.
Covers (Cont'd)			
bolted (Cont'd)			
	VIII-1-83-190	BC82-197	106
	VIII-1-92-52	BC90-299	532
	VIII-1-98-31	BC98-174	737
channel	VIII-1-83-154	BC83-170	91
dished	VIII-1-95-58	BC95-042	652
flat	VIII-1-83-154	BC83-170	91
	VIII-1-83-323	BC84-429	182
	VIII-1-98-48	BC98-333	743
	VIII-1-98-49	BC98-334	744
handhole	VIII-1-83-170	BC83-208	98
manway	VIII-1-95-14	BC94-136	629
spherically-dished	VIII-1-95-07	BC94-191	626
Creep Rate			
average stress	VIII-1-83-130	BC81-717	73
Cryogenic Vessels	VIII-1-01-69	BC01-351	820
Curvature	VIII-1-92-46	BC91-627	530
Cylinders			
axial compression	VIII-1-86-02	BC79-696	213
Data Report Forms			
base materials	VIII-1-83-163	BC81-576	94
creation	VIII-1-83-17	BC82-238	13
	VIII-1-89-153	BC89-281	417
	VIII-1-89-246	BC90-650	463
distribution	VIII-1-83-44	BC82-509	27
	VIII-1-89-234	BC90-497	458
	VIII-1-92-148	BC93-421	580
edition of Code	VIII-1-95-29	BC94-502	641
entries	VIII-1-92-106	BC92-304	559
	VIII-1-92-199	BC93-446	608
	VIII-1-92-202	BC94-036	609
	VIII-1-95-35	BC93-524	643
	VIII-1-95-80	BC94-351	666
	VIII-1-98-27	BC98-062	730
	VIII-1-98-76	BC99-280	763
	VIII-1-01-76	BC01-379	826
	VIII-1-01-104	BC01-793	838
flanges	VIII-1-83-23	BC82-291	16
nonpressure attachments	VIII-1-83-70	BC82-529	39
	VIII-1-83-213	BC83-075	124
	VIII-1-83-322	BC84-411	182
partial	VIII-1-95-12	BC94-056	628
	VIII-1-95-45	BC94-671	647
	VIII-1-95-47	BC94-412	648
	VIII-1-95-148	BC96-522	706
	VIII-1-01-47	BC97-401	811
	VIII-1-01-54	BC01-224	814
	VIII-1-01-75	BC01-377	826
	VIII-1-04-36	BC04-231	888
remarks	VIII-1-92-91	BC92-239	554

Subject	Interpretation	File No.	Page No.
Data Report Forms (Cont'd)			
remarks (Cont'd)			
	VIII-1-92-118	BC92-104	564
	VIII-1-98-56	BC98-367	751
	VIII-1-04-39	BC02-2682	890
sign-off	VIII-1-89-263	BC89-129	477
	VIII-1-92-179	BC93-590	596
U-1	VIII-1-86-185	BC87-398	311
	VIII-1-89-177	BC90-021	431
	VIII-1-92-123	BC92-454	571
	VIII-1-95-76	BC94-417	664
U-1A	VIII-1-83-266	BC84-089	148
	VIII-1-89-111	BC89-170	399
	VIII-1-92-29	BC91-466	517
	VIII-1-98-96	BC98-292	775
	VIII-1-01-48	BC01-194	811
U-2	VIII-1-86-34	BC85-503	226
	VIII-1-86-92	BC86-255	261
	VIII-1-89-214	BC90-498	450
	VIII-1-92-105	BC92-295	559
U-3	VIII-1-83-112	BC83-032	64
	VIII-1-83-259	BC84-050	146
	VIII-1-92-29	BC91-466	517
year built	VIII-1-83-317	BC84-412	180
Design			
formulas in Appendix 1	VIII-1-89-139	BC89-218	412
	VIII-1-89-131	BC89-151	409
methods	VIII-1-92-146	BC93-373	579
	VIII-1-95-22	BC94-280	631
	VIII-1-01-12	BC00-131	794
pressure	VIII-1-95-64	BC95-172	655
	VIII-1-01-138	BC01-405	863
stress	VIII-1-01-70	BC01-380	821
welded joints	VIII-1-95-53	BC95-049	651
Dimpled Assemblies	VIII-1-89-257	BC90-772	467
	VIII-1-89-271	BC90-300	481
	VIII-1-89-291	BC91-045	488
	VIII-1-89-298	BC91-047	491
	VIII-1-92-101	BC92-010	557
	VIII-1-92-102	BC92-345	558
	VIII-1-92-191	BC93-741	605
	VIII-1-95-19	BC94-631	630
	VIII-1-98-105	BC99-456	779
	VIII-1-98-107	BC99-608	780
Direct Fired	VIII-1-98-63	BC97-282	753
Edition of Code	VIII-1-95-29	BC94-502	641
	VIII-1-01-72	BC01-570	822
External Pressure			
boundary	VIII-1-83-195	BC83-007	109
calculations	VIII-1-98-82	BC98-172a	765
conical shell reducer section	VIII-1-83-283	BC84-139	156
External Pressure (Cont'd)			
conical shell reducer section (Cont'd)			
	VIII-1-01-113	BC00-591	846
flanges	VIII-1-95-16	BC94-410	629
heads	VIII-1-98-111	BC00-083	782
MAWP for tubes	VIII-1-83-169	BC83-113	97
nozzle reinforcement	VIII-1-83-332	BC84-115	192
openings	VIII-1-83-185	BC83-317	103
piping	VIII-1-83-199	BC83-226	111
pressure relief devices	VIII-1-83-27	BC80-198	18
proof test	VIII-1-86-07	BC85-283	215
stamping	VIII-1-83-140	BC82-285	78
stiffening rings	VIII-1-83-68	BC82-308	39
	VIII-1-04-24	BC03-1845	883
Extreme Fiber Elongation			
heat treatment	VIII-1-83-12	BC82-170	11
Factors and Dimensions			
C, factor	VIII-1-83-15	BC82-206	13
E, definition of	VIII-1-83-113	BC83-033	64
G, dimension	VIII-1-89-35	BC88-250	359
g_o, dimension	VIII-1-83-43	BC82-508	26
	VIII-1-83-115	BC81-514	66
g_1, dimension	VIII-1-83-115	BC81-514	66
	VIII-1-83-216	BC83-476	125
h, dimension	VIII-1-83-115	BC81-514	66
joint efficiency factors	VIII-1-83-139	BC83-132	77
	VIII-1-83-171	BC83-212	98
	VIII-1-83-177	BC83-286	100
	VIII-1-83-196	BC83-019	110
	VIII-1-86-96	BC86-270	263
	VIII-1-86-218	BC88-043	331
ligament efficiency	VIII-1-83-94	BC82-784	55
s, dimensions	VIII-1-83-110	BC82-864	63
stress reduction	VIII-1-83-42	BC82-416	26
Fatigue			
curves	VIII-1-89-12	BC87-204	348
Field Sites	VIII-1-89-223	BC90-535	453
	VIII-1-95-26	BC94-106	639
	VIII-1-95-127	BC96-128	693
	VIII-1-95-127R	BC96-128*	715
	VIII-1-01-53	BC01-222	813
	VIII-1-04-09	BC03-1491	875
Fittings			
ANSI B16.9	VIII-1-83-67	BC82-306	38
	VIII-1-83-174	BC83-266	99
attachment	VIII-1-98-29	BC97-267	731
	VIII-1-01-115	BC01-870	846
lugs	VIII-1-89-113	BC89-168	400
piping	VIII-1-83-174	BC83-266	99
	VIII-1-89-220	BC89-161	452
	VIII-1-92-96	BC91-080	556

Subject	Interpretation	File No.	Page No.
Fittings (Cont'd)			
piping (Cont'd)			
	VIII-1-92-130	BC92-459	573
pressure–temperature ratings	VIII-1-83-174	BC83-266	99
	VIII-1-89-204	BC90-435	441
small	VIII-1-89-61	BC88-424	370
	VIII-1-83-284	BC84-140	157
Flanges			
attached to tubesheet	VIII-1-83-96	BC82-801	56
attachments	VIII-1-83-21	BC82-274	15
bar	VIII-1-86-171	BC85-177	306
bolted	VIII-1-83-02	BC81-213	7
	VIII-1-83-23	BC82-291	16
	VIII-1-83-91	BC82-738	54
	VIII-1-83-154	BC83-170	91
	VIII-1-83-172	BC83-256	98
	VIII-1-83-176	BC83-285	100
	VIII-1-83-242	BC83-604	136
	VIII-1-83-340	BC84-656	196
	VIII-1-86-117	BC87-006	278
	VIII-1-89-15	BC88-077	349
	VIII-1-89-146	BC89-251	415
	VIII-1-95-73	BC95-313	663
	VIII-1-95-141	BC96-379	704
	VIII-1-01-78	BC01-407	827
cast iron	VIII-1-86-86	BC86-293	259
design	VIII-1-83-39	BC82-398	25
	VIII-1-83-216	BC83-476	125
	VIII-1-92-90	BC92-226	553
	VIII-1-89-323	BC90-192	569
	VIII-1-92-121	BC92-299	570
	VIII-1-95-38	BC94-366	645
	VIII-1-95-69	BC95-234	661
	VIII-1-95-72	BC95-312	662
	VIII-1-98-72	BC99-292	756
	VIII-1-01-20	BC00-696	801
	VIII-1-01-59	BC01-296	815
external pressure	VIII-1-95-16	BC94-410	629
ferritic	VIII-1-92-63	BC92-075	536
	VIII-1-01-114	BC01-606	846
flat face	VIII-1-89-125	BC88-162	406
	VIII-1-01-18	BC00-688	800
forged threaded	VIII-1-83-19	BC82-258	14
forgings	VIII-1-92-180	BC93-627	596
gasket	VIII-1-83-297	BC82-122	171
	VIII-1-83-303	BC83-359	174
	VIII-1-86-173	BC86-247	306
	VIII-1-92-60	BC92-077	535
gasket factor	VIII-1-83-39	BC82-398	25
	VIII-1-89-56	BC88-395	368
girth	VIII-1-83-205	BC83-461	114
hubbed	VIII-1-86-25	BC85-464	222
	VIII-1-86-25R	BC85-464*	253
	VIII-1-89-185	BC90-243	434
	VIII-1-01-67	BC01-301	819
hubless	VIII-1-83-21	BC82-274	15

Subject	Interpretation	File No.	Page No.
Flanges (Cont'd)			
hubless (Cont'd)			
	VIII-1-83-91	BC82-738	54
	VIII-1-86-69	BC85-228	247
	VIII-1-86-138	BC87-120	288
impact testing	VIII-1-98-10	BC97-274	719
integral hub	VIII-1-83-115	BC81-514	66
	VIII-1-89-24	BC88-143	354
	VIII-1-83-356	BC85-074	203
integral type	VIII-1-83-25	BC82-301	17
	VIII-1-83-43	BC82-508	26
	VIII-1-01-38	BC01-121	808
	VIII-1-01-132	BC02-2920	856
	VIII-1-04-42	BC04-1015	891
long weld neck	VIII-1-83-244	BC83-638	138
	VIII-1-89-17	BC88-087	350
loose type hubbed	VIII-1-83-21	BC82-274	15
	VIII-1-92-62	BC92-099	536
loose type without hub	VIII-1-92-57	BC92-053	534
nondestructive examination	VIII-1-98-51	BC98-288	744
optional type	VIII-1-83-43	BC82-508	26
	VIII-1-86-70	BC85-230	248
	VIII-1-86-150	BC86-194	297
plate material	VIII-1-86-95	BC86-267	262
	VIII-1-92-37	BC91-600	520
	VIII-1-92-220	BC94-109	616
	VIII-1-01-45	BC01-303	810
pressure–temperature ratings	VIII-1-98-95	BC98-230	775
	VIII-1-01-45	BC01-303	810
raised-face blind	VIII-1-04-30	BC03-623	886
reverse	VIII-1-83-225	BC79-323	129
	VIII-1-83-292	BC84-192	161
	VIII-1-92-128	BC92-383	572
	VIII-1-95-24	BC94-591	632
	VIII-1-98-26	BC97-508A	730
	VIII-1-98-120	BC00-268	785
seal-welded	VIII-1-83-303	BC83-359	174
seating stress	VIII-1-83-39	BC82-398	25
self-energizing gaskets	VIII-1-86-196	BC86-527	320
	VIII-1-01-136	BC01-329	862
slip-on	VIII-1-89-258	BC90-773	468
socket weld	VIII-1-83-284	BC84-140	157
	VIII-1-86-54	BC86-113	241
Teflon O-ring	VIII-1-83-39	BC82-389	25
thickness	VIII-1-83-235	BC83-590	133
	VIII-1-89-205	BC90-436	441
threaded bolts	VIII-1-86-216	BC88-028	330
weld neck	VIII-1-83-131	BC82-209	73
	VIII-1-92-50	BC90-788	532
	VIII-1-95-140	BC96-373	704
welded to nozzles	VIII-1-86-84	BC86-286	258
welds	VIII-1-89-249	BC99-653	464
	VIII-1-98-20	BC97-512	728

Subject	Interpretation	File No.	Page No.
Forgings			
endcaps	VIII-1-86-53	BC86-106	241
hydrostatic testing after grinding	VIII-1-83-311	BC84-313	178
vessels	VIII-1-89-152	BC89-275	417
	VIII-1-95-44	BC94-669	647
	VIII-1-98-27	BC98-062	730
	VIII-1-01-49	BC01-196	812
Forming			
cold blows	VIII-1-83-148	BC82-403	88
half-pipe jacket	VIII-1-95-13	BC94-131	628
shell sections and heads	VIII-1-95-142	BC96-352	704
Glass-Lined Vessels	VIII-1-95-116	BC96-129	689
	VIII-1-98-91	BC99-478	773
Hand Holes	VIII-1-95-115	BC96-273	689
Headers			
box type	VIII-1-83-03	BC81-260	7
	VIII-1-83-210	BC78-640	122
Heads			
attachment of	VIII-1-92-86	BC92-248	552
	VIII-1-92-210	BC94-137	613
	VIII-1-95-135	BC96-258	702
cast iron	VIII-1-83-172	BC83-256	98
center line	VIII-1-89-78	BC89-018	381
cold spun	VIII-1-83-223	BC83-582	128
	VIII-1-83-224	BC83-586	129
flat	VIII-1-83-181	BC83-315	102
	VIII-1-83-327	BC84-592	184
	VIII-1-83-339	BC84-635	195
	VIII-1-83-355	BC85-066	203
	VIII-1-83-359	BC85-138	204
	VIII-1-89-206	BC90-439	442
	VIII-1-92-195	BC93-670	607
	VIII-1-98-03	BC96-105	716
	VIII-1-98-21	BC97-514	728
	VIII-1-01-107	BC01-651	839
	VIII-1-01-109	BC01-801	840
floating	VIII-1-83-157	BC83-207	92
	VIII-1-83-179	BC83-306	101
formed	VIII-1-89-121	BC88-121	404
	VIII-1-89-184	BC90-193	433
	VIII-1-89-209	BC90-482	448
	VIII-1-92-06	BC91-270	506
	VIII-1-92-46	BC91-627	530
	VIII-1-92-79	BC92-150	542
	VIII-1-92-160	BC93-486	589
	VIII-1-95-132	BC96-351	695
	VIII-1-98-38	BC98-176	740
	VIII-1-01-57	BC01-288	815
heat treatment	VIII-1-89-74	BC88-472	380
hemispherical spherical	VIII-1-83-177	BC83-286	100
identification and marking	VIII-1-83-01	BC81-195	6
openings	VIII-1-83-14	BC82-191	12

Subject	Interpretation	File No.	Page No.
Heads (Cont'd)			
openings (Cont'd)			
	VIII-1-95-94	BC95-473	677
partial data reports	VIII-1-89-96	BC89-084	388
pressure on concave side	VIII-1-83-198	BC83-139	111
	VIII-1-83-215	BC83-404	125
pressure on convex side	VIII-1-86-03	BC85-223	214
radius	VIII-1-83-81	BC82-729	43
repairs	VIII-1-86-112	BC86-513	276
	VIII-1-89-108	BC89-188	393
seamless	VIII-1-83-02	BC81-213	7
	VIII-1-83-86	BC82-813	51
	VIII-1-86-134	BC87-112	286
seamless hemispherical	VIII-1-83-145	BC83-200	80
seamless with skirt	VIII-1-83-182	BC83-312	102
spherical portion of ellipsoidal	VIII-1-83-149	BC83-036	88
	VIII-1-92-156	BC92-419	583
testing	VIII-1-89-74	BC88-472	380
thickness	VIII-1-83-66	BC82-294	38
	VIII-1-83-135	BC83-159	75
	VIII-1-83-211	BC82-417	123
	VIII-1-86-49	BC86-069	239
	VIII-1-86-179	BC87-073	309
	VIII-1-86-181	BC87-245	310
	VIII-1-92-106	BC92-304	559
	VIII-1-92-216	BC93-718	615
thickness for convex side	VIII-1-83-11	BC82-165	11
tolerances	VIII-1-83-229	BC83-024	131
	VIII-1-89-264	BC89-234	478
	VIII-1-92-33	BC90-727	519
toriconical	VIII-1-95-09	BC94-474	627
torispherical formed	VIII-1-83-171	BC83-212	98
	VIII-1-86-77	BC86-254	255
	VIII-1-86-88	BC86-300	260
	VIII-1-86-174	BC86-417	307
	VIII-1-86-175	BC87-302	307
	VIII-1-89-38	BC88-389	360
weld caps	VIII-1-83-174	BC83-266	99
welded	VIII-1-83-159	BC83-262	93
	VIII-1-83-196	BC83-019	110
	VIII-1-86-199	BC87-475	321
Heat Exchangers			
air cooled	VIII-1-83-03	BC81-260	7
	VIII-1-01-142	BC02-2428	864
double pipe	VIII-1-98-74	BC99-269	757
	VIII-1-01-80	BC01-411	828
examination	VIII-1-83-50	BC82-624	29
exemptions	VIII-1-89-41	BC88-015	361
finned	VIII-1-98-01	BC96-536	716
floating head	VIII-1-83-179	BC83-306	101
internal failures	VIII-1-89-84	BC89-009	383
permitted materials	VIII-1-83-60	BC82-659	35
plate type	VIII-81-89R	BC81-258	6

Subject	Interpretation	File No.	Page No.
Heat Exchangers (Cont'd)			
plate type (Cont'd)			
	VIII-1-86-36	BC85-599	233
pressure load	VIII-1-98-77	BC99-363	763
scope	VIII-1-89-59	BC88-422	369
shell and tube	VIII-1-83-232	BC83-355	132
tubes	VIII-1-83-188	BC81-443	105
	VIII-1-83-293	BC84-193	161
	VIII-1-89-82	BC89-056	382
Heat Treatment			
cold formed parts	VIII-1-86-15	BC85-319	218
conditions	VIII-1-92-51	BC88-434	532
elliptical manway rings	VIII-1-83-337	BC84-601	194
extreme fiber elongation	VIII-1-83-71	BC82-587	40
	VIII-1-83-105	BC82-798	61
	VIII-1-83-337	BC84-601	194
fittings	VIII-1-89-140	BC89-224	412
flanges	VIII-1-83-122	BC82-549	69
formed heads	VIII-1-86-48	BC86-068	239
	VIII-1-95-50	BC94-684	649
hot formed parts	VIII-1-86-27	BC85-140	223
	VIII-1-86-27R	BC85-140*	549
local heating	VIII-1-83-353	BC85-025	202
	VIII-1-89-317	BC90-682	498
normalizing	VIII-1-83-06	BC81-660	8
	VIII-1-81-116	BC81-559	66
	VIII-1-86-37	BC85-606	233
	VIII-1-89-19	BC88-120	352
	VIII-1-89-53	BC88-387	367
	VIII-1-89-69	BC88-193	378
	VIII-1-92-39	BC91-565	528
normalizing/quenching	VIII-1-83-13	BC82-180	12
nozzle necks	VIII-1-89-162	BC89-375	421
P-No. 1 materials	VIII-1-83-12	BC82-170	11
	VIII-1-86-48	BC86-068	239
P-No. 3, 4, and 5 materials	VIII-1-89-314	BC90-483	497
postforming	VIII-1-92-59	BC91-289	535
postweld (*see separate listing*)			
rate	VIII-1-92-66	BC92-054	537
test specimens	VIII-77-33R	NA	789
	VIII-1-01-73	BC01-287	825
	VIII-1-01-101	BC01-341	837
thermocouples	VIII-1-98-11	BC97-275	719
Hydrostatic Testing			
after grinding	VIII-1-83-311	BC84-313	178
before final welding	VIII-1-83-137	BC82-782	76
	VIII-1-89-51	BC88-363	366
chambered vessels	VIII-1-86-71	BC85-329	248
closures	VIII-1-89-48	BC88-212	364
completed vessels	VIII-1-89-27	BC88-175	355
	VIII-1-89-27R	BC88-175*	356
	VIII-1-89-245	BC90-649	463
	VIII-1-89-281	BC90-787	485
	VIII-1-92-65	BC92-124	537

Subject	Interpretation	File No.	Page No.
Hydrostatic Testing (Cont'd)			
completed vessels (Cont'd)			
	VIII-1-92-84	BC92-220	551
	VIII-1-98-45	BC98-245	742
contents of water	VIII-1-01-27	BC01-092	804
destructive	VIII-1-83-108	BC80-053	62
	VIII-1-86-137	BC87-117	287
	VIII-1-86-152	BC87-164	298
examination	VIII-1-95-11	BC94-564	628
ferritic steels	VIII-1-86-122	BC86-505	280
gas leak testing	VIII-1-83-118	BC82-397	67
	VIII-1-01-26	BC01-81	803
interconnected vessels	VIII-1-83-301	BC83-308	173
metal temperature	VIII-1-89-211	BC90-480	449
monitoring	VIII-1-01-88	BC01-635	831
painting of vessels	VIII-1-86-66	BC86-238	246
	VIII-1-92-125	BC92-458	571
pressurization	VIII-1-92-204	BC93-765	610
	VIII-1-95-27	BC94-414	640
	VIII-1-95-64	BC95-172	655
	VIII-1-95-93	BC95-420	676
	VIII-1-01-02	BC00-393	789
	VIII-1-01-55	BC01-226	814
shell thickness	VIII-1-83-287	BC84-154	158
single wall vessels	VIII-1-92-115	BC92-389	562
stress values	VIII-79-13R	BC78-847*, BC81-433*	5
	VIII-1-83-128	BC83-072	72
	VIII-1-89-287	BC89-319	487
	VIII-1-01-77	BC01-406	827
temperature recording	VIII-1-98-86	BC99-346	766
threaded fitting	VIII-1-01-127	BC02-105a	850
volumetric expansion method	VIII-1-89-57	BC88-412	368
	VIII-1-89-134	BC89-190	410
Interpretation Statement in Code	VIII-1-95-159	BC96-134	715
Impact Testing			
absorbed energy	VIII-1-86-208	BC87-429	326
attachments	VIII-1-89-217	BC90-496	451
	VIII-1-92-126	BC93-140	572
	VIII-1-95-68	BC95-233	661
base materials	VIII-1-01-06	BC00-503	791
	VIII-1-01-25	BC01-056	803
bolting material	VIII-1-86-231	BC88-117	337
Charpy	VIII-1-89-290	BC90-342	488
clad construction	VIII-1-83-58R	BC81-609*	167
ERW pipe	VIII-1-89-16	BC88-081	350
	VIII-1-89-23	BC88-142	354
electrodes	VIII-1-89-52	BC88-375	366
	VIII-1-89-273	BC90-770	482
exemptions	VIII-1-89-91	BC89-074	386
	VIII-1-89-279	BC90-771	484
	VIII-1-89-248	BC90-690	464
	VIII-1-89-274	BC90-861	482

Subject	Interpretation	File No.	Page No.
Impact Testing (Cont'd)			
exemptions (Cont'd)			
	VIII-1-92-93	BC90-247	554
	VIII-1-92-98	BC92-319	556
	VIII-1-92-122	BC92-406	570
	VIII-1-92-134	BC92-455	574
	VIII-1-92-142	BC93-104	578
	VIII-1-92-144	BC93-349	579
	VIII-1-92-187	BC93-683	599
	VIII-1-92-218	BC93-777A	616
	VIII-1-92-219	BC94-073	616
	VIII-1-95-28	BC94-470	640
	VIII-1-95-54	BC93-438	651
	VIII-1-95-111	BC96-246	687
	VIII-1-95-160	BC96-378	725
	VIII-1-98-93	BC99-565	774
	VIII-1-98-98	BC99-596	776
	VIII-1-01-36	BC01-105	807
	VIII-1-01-37	BC01-106	807
	VIII-1-01-86	BC01-403	830
filler metal	VIII-1-95-129	BC96-372	694
flanges	VIII-1-89-76	BC89-005	380
	VIII-1-92-157	BC93-439	584
	VIII-1-98-13	BC96-342	725
	VIII-1-98-39	BC98-286	740
heat treatment	VIII-1-01-48	BC01-194	811
hydrostatic test temperature	VIII-1-89-216	BC90-399	451
location of specimens	VIII-1-83-209	BC83-537	116
	VIII-1-83-263	BC84-057	147
low temperature service	VIII-1-83-126	BC83-073	71
	VIII-1-83-127	BC83-083	71
	VIII-1-83-279	BC83-318	155
	VIII-1-86-40	BC85-195	234
	VIII-1-86-123	BC87-074	280
	VIII-1-86-206	BC87-069	325
	VIII-1-89-295	BC91-083	490
	VIII-1-92-64	BC92-102	536
materials	VIII-1-83-73	BC82-663	40
	VIII-1-83-117	BC82-305	67
	VIII-1-89-105	BC89-158	392
	VIII-1-89-141	BC89-229	413
	VIII-1-89-190	BC90-261	436
	VIII-1-89-199	BC90-314	439
	VIII-1-92-103	BC92-343	558
	VIII-1-92-135	BC92-456	575
	VIII-1-98-50	BC98-425	744
	VIII-1-98-100	BC99-598	777
	VIII-1-01-56	BC01-285	814
minimum design metal temperature	VIII-1-86-230	BC88-086	336
	VIII-1-89-21	BC88-134	353
	VIII-1-89-155R	BC89-312*	418
	VIII-1-89-239	BC89-162	460
	VIII-1-89-267	BC89-253	479
	VIII-1-89-268	BC90-225	480
	VIII-1-89-270	BC90-295	481
Impact Testing (Cont'd)			
minimum design metal temperature (Cont'd)			
	VIII-1-89-322	BC90-683	551
	VIII-1-95-15	BC94-186	629
	VIII-1-95-85	BC95-397	668
	VIII-1-01-121	BC02-2427	848
number of specimens	VIII-1-89-21	BC88-134	353
production	VIII-1-86-130	BC87-046	284
	VIII-1-92-181	BC93-629	596
	VIII-1-95-06	BC94-292	626
	VIII-1-95-102	BC96-098	679
	VIII-1-95-103	BC96-201	680
	VIII-1-95-155	BC96-409	709
	VIII-1-98-40	BC98-227	741
	VIII-1-01-35	BC01-104	807
	VIII-1-01-93	BC01-647	834
	VIII-1-01-110	BC01-843	840
repairs	VIII-1-89-42	BC88-071	361
retesting	VIII-1-83-276	BC84-131	153
	VIII-1-95-20	BC94-496	631
rings	VIII-1-89-225	BC90-544	454
small vessels	VIII-1-89-321	BC90-441	500
specimens	VIII-1-98-114	BC93-751	783
	VIII-1-04-34	BC04-056	887
testing temperature	VIII-1-86-14	BC85-294	218
	VIII-1-89-166	BC89-414	427
	VIII-1-01-19	BC00-691 (BC00-708)	800
test plates	VIII-1-92-81	BC92-169	543
	VIII-1-92-108	BC92-334	560
	VIII-1-92-175	BC93-638	594
	VIII-1-92-206	BC94-072	611
	VIII-1-95-60	BC95-157	653
thickness	VIII-1-89-308	BC90-726	494
	VIII-1-95-62	BC95-161	654
	VIII-1-98-05	BC96-257	717
	VIII-1-01-84	BC01-607	830
Type 304	VIII-1-83-08	BC82-066	9
	VIII-1-83-222	BC83-580	128
	VIII-1-89-52	BC88-375	366
Type 304L	VIII-1-83-08	BC82-066	9
	VIII-1-83-222	BC83-580	128
Type 316	VIII-1-83-222	BC83-580	128
welded pipe	VIII-1-89-68	BC88-176	377
weld metal	VIII-1-89-130	BC89-127	408
	VIII-1-89-218	BC90-520	451
	VIII-1-89-240	BC89-226	460
	VIII-1-01-46	BC01-192	810
weld overlays	VIII-1-83-250	BC83-652A	141
weld procedures	VIII-1-89-322	BC90-683	551
	VIII-1-92-124	BC92-457	571
	VIII-1-92-129	BC92-404	573
	VIII-1-92-173	BC93-591	594
	VIII-1-92-175	BC93-638	594
	VIII-1-92-221	BC94-110	617

Subject	Interpretation	File No.	Page No.
Impact Testing (Cont'd)			
weld procedures (Cont'd)			
	VIII-1-95-158	BC97-254	710
welds with welding consumables	VIII-1-98-52	BC98-086	749
	VIII-1-01-06	BC00-503	791
	VIII-1-01-64	BC01-317	817
Indicators			
telltale	VIII-1-86-12	BC85-290	217
Inspection			
exemptions	VIII-1-83-201	BC83-420	112
materials	VIII-1-89-146	BC89-251	415
	VIII-1-92-04	BC91-283	506
openings	VIII-1-83-264	BC84-071	148
	VIII-1-83-336	BC84-599	194
	VIII-1-95-46	BC94-679	648
	VIII-1-04-15	BC03-1295	876
repairs	VIII-1-95-32	BC94-589*	642
	VIII-1-95-32R	BC94-589	661
	VIII-1-04-15	BC03-1295	878
Internal Pressure			
formed heads	VIII-1-04-25	BC04-156	883
Jacketed Vessels	VIII-1-89-124	BC88-139	406
	VIII-1-89-165	BC89-413	427
	VIII-1-89-241	BC89-237	461
	VIII-1-89-265	BC89-239	479
	VIII-1-89-278	BC90-747	483
	VIII-1-92-12	BC91-432	509
	VIII-1-92-23	BC91-433	514
	VIII-1-92-77	BC91-629	542
	VIII-1-92-77R	BC91-629*	549
	VIII-1-92-217	BC93-764	615
	VIII-1-95-149	BC96-478	707
half-pipe	VIII-1-92-109	BC92-344	560
Joints			
brazed	VIII-1-86-08	BC85-284	216
categories	VIII-1-83-34	BC82-264	23
	VIII-1-83-160	BC83-034	94
	VIII-1-83-177	BC83-286	100
	VIII-1-83-182	BC83-312	102
	VIII-1-83-246	BC83-643	139
	VIII-1-86-180	BC87-203	309
	VIII-1-86-202	BC87-408	323
	VIII-1-89-05	BC88-128	344
	VIII-1-89-33	BC88-245	358
	VIII-1-92-30	BC91-468	517
	VIII-1-92-30R	BC91-468*	623
	VIII-1-92-107	BC92-317	560
	VIII-1-92-158	BC93-460	584
	VIII-1-95-04	BC94-287	625
	VIII-1-01-63	BC01-315	817

Subject	Interpretation	File No.	Page No.
Joints (Cont'd)			
categories (Cont'd)			
	VIII-1-01-120	BC02-2681	848
circumferential	VIII-1-83-273	BC84-118	152
	VIII-1-04-14	BC03-1657	876
corner	VIII-1-83-161	BC83-268	94
	VIII-1-83-195	BC83-007	109
	VIII-1-86-111	BC86-512	275
	VIII-1-89-40	BC87-218	360
	VIII-1-89-219	BC88-466	452
	VIII-1-89-227	BC90-412	455
	VIII-1-95-139	BC96-354	703
efficiency factors	VIII-1-83-139	BC83-132	77
	VIII-1-83-152	BC83-167	90
	VIII-1-83-171	BC83-212	98
	VIII-1-83-196	BC83-019	110
	VIII-1-83-265	BC84-087	148
	VIII-1-83-268	BC84-102	149
	VIII-1-83-254R	BC83-664*	168
	VIII-1-83-320	BC84-130	181
	VIII-1-83-355	BC85-066	203
	VIII-1-86-153	BC87-166	299
	VIII-1-86-190	BC87-428	314
	VIII-1-89-14	BC87-297	349
	VIII-1-89-97	BC89-085	388
	VIII-1-89-144	BC89-240	414
	VIII-1-89-150	BC89-331	420
	VIII-1-89-201	BC90-326	440
	VIII-1-92-55	BC91-453	533
	VIII-1-92-97	BC92-310	556
	VIII-1-92-138	BC93-110	576
	VIII-1-95-40	BC94-569	645
	VIII-1-95-42	BC94-577	646
	VIII-1-01-89	BC01-636	832
	VIII-1-01-135	BC02-4115	857
expansion	VIII-1-83-54	BC81-064	31
	VIII-1-83-125	BC82-863	70
	VIII-1-83-319	BC83-223C	181
	VIII-1-86-184	BC87-387	311
	VIII-1-89-11	BC87-198	347
	VIII-1-92-78	BC92-148	542
	VIII-1-95-154	BC96-525	708
finished	VIII-1-89-297	BC91-168	490
lap joint stub ends	VIII-1-98-07	BC96-341b	718
longitudinal	VIII-1-83-273	BC84-118	152
longitudinal with backing bar	VIII-1-83-187	BC79-246	105
offset	VIII-1-86-183	BC87-385	311
tapered transitions	VIII-1-86-05	BC85-229	214
	VIII-1-86-221	BC87-042	332
tubesheet	VIII-1-83-56	BC81-403	33
tube-to-tubesheet	VIII-1-83-10	BC82-164	10
	VIII-1-86-227	BC88-082	335
	VIII-1-01-62	BC01-313	816
types	VIII-1-83-124	BC82-842	70
	VIII-1-83-220	BC83-557	127
	VIII-1-83-267	BC84-090	149

Subject	Interpretation	File No.	Page No.
Joints (Cont'd)			
types (Cont'd)			
	VIII-1-83-290	BC84-174	160
	VIII-1-86-10	BC85-286	216
	VIII-1-89-04	BC88-124	344
	VIII-1-89-64	BC88-429	371
	VIII-1-89-67	BC88-163	377
	VIII-1-01-133	BC02-4004	856
Lethal Service	VIII-1-92-24	BC91-455	515
	VIII-1-92-92	BC92-246	554
	VIII-1-92-112	BC92-352	561
	VIII-1-92-194	BC93-684	604
	VIII-1-92-211	BC94-180	613
	VIII-1-95-08	BC94-221	627
	VIII-1-98-23	BC97-522	729
	VIII-1-98-113	BC00-100	783
	VIII-1-98-119	BC00-242	785
	VIII-1-01-14	BC00-598	794
	VIII-1-01-118	BC02-106a	847
Liquid Penetration Examination			
acceptance criteria	VIII-1-83-298	BC82-827	172
	VIII-1-89-157	BC89-302	419
	VIII-1-92-171	BC92-453	593
clad material	VIII-1-83-191	BC82-221	107
corner joints	VIII-1-86-135	BC87-113	286
flat plate	VIII-1-89-180	BC90-025	432
relevant indication	VIII-1-83-306	BC83-592	176
requirements	VIII-1-04-02	BC02-4118	873
rolled plate	VIII-1-83-144	BC83-198	80
Loads			
abnormal pressures	VIII-1-04-29	BC04-325	885
combination	VIII-1-89-84	BC89-064	383
	VIII-1-95-64	BC95-172	655
	VIII-1-01-83	BC01-592	829
impact	VIII-1-04-27	BC04-324	884
operating	VIII-1-83-130	BC81-717	73
	VIII-1-92-184	BC93-621	598
photoelastic strain measurement	VIII-1-89-06	BC88-137	345
shear	VIII-1-01-141	BC02-2426	864
static head	VIII-1-86-191	BC87-313	314
	VIII-1-01-82	BC01-591	829
unknown	VIII-1-89-10	BC87-160	347
	VIII-1-89-143	BC89-238	413
	VIII-1-95-82	BC95-310	667
Low Temperature Service	VIII-1-92-186	BC93-652	598
Magnetic Particle Examination			
acceptance criteria	VIII-1-83-298	BC82-827	172
	VIII-1-92-213	BC94-003	614
corner joints	VIII-1-86-135	BC87-113	286
linear discontinuities	VIII-1-83-41	BC82-409	25
relevant indication	VIII-1-83-306	BC83-592	176
Magnetic Particle Examination (Cont'd)			
relevant indication (Cont'd)			
	VIII-1-95-51	BC95-046	650
rolled plate	VIII-1-83-144	BC83-198	80
Manufacturer Responsibilities	VIII-1-92-22	BC91-267	514
	VIII-1-95-32	BC94-589	642
	VIII-1-01-68	BC01-348	819
Manufacturer's Standard	VIII-1-92-54	BC91-402	533
Manways	VIII-1-95-66	BC95-067	656
	VIII-1-01-122	BC02-2562	849
	VIII-1-01-148	BC03-176	867
Markings			
abbreviations	VIII-1-86-108	BC86-448	268
	VIII-1-86-110	BC86-202	269
arrangement	VIII-1-83-328	BC82-284	190
covers	VIII-1-83-170	BC83-208	98
general	VIII-1-89-183	BC90-239	433
	VIII-1-89-193	BC90-393	437
	VIII-1-89-210	BC90-418	448
	VIII-1-89-210R	BC90-418*	475
	VIII-1-89-224	BC90-543	453
	VIII-1-89-238	BC90-464	459
	VIII-1-92-113	BC92-355	562
	VIII-1-98-30	BC97-405	737
	VIII-1-01-129	BC02-2791	855
	VIII-1-04-32	BC03-777	886
geographical location	VIII-1-86-93	BC86-256	262
heads	VIII-1-83-01	BC81-195	6
	VIII-1-83-145	BC83-200	80
high volume produced vessels	VIII-1-86-47	BC85-607	238
identification	VIII-1-83-19	BC82-258	14
	VIII-1-86-101	BC86-320	265
	VIII-1-86-105	BC86-379	267
material	VIII-1-95-57	BC95-156	652
	VIII-1-95-61	BC95-158	653
nameplate	VIII-1-95-31	BC94-587	642
	VIII-1-95-55	BC93-482	651
	VIII-1-95-120	BC96-216	691
	VIII-1-98-94	BC99-574	774
pressure part	VIII-1-92-145	BC93-113	579
	VIII-1-95-70	BC95-173	662
	VIII-1-01-50	BC01-198	812
	VIII-1-01-75	BC01-377	826
pressure–temperature	VIII-1-83-300	BC83-273	173
	VIII-1-86-223	BC88-049	333
radiography	VIII-1-92-40	BC92-036	528
	VIII-1-01-17	BC00-680	800
	VIII-1-01-21	BC00-698	801
seamless head with welded plug	VIII-1-86-22	BC85-334	221
size of	VIII-1-86-78	BC86-258	255
welding material	VIII-1-83-343	BC84-674	197
welding process	VIII-1-95-117	BC96-130	690

Subject	Interpretation	File No.	Page No.
Markings (Cont'd)			
welding process (Cont'd)			
	VIII-1-01-150	BC03-454	868
Materials			
additional elements	VIII-1-98-70	BC98-488	756
after brazing	VIII-1-83-299	BC83-025	172
alloy steel bars	VIII-1-83-37	BC82-314	24
ASTM Specification	VIII-1-83-164	BC81-610	95
	VIII-1-92-100	BC90-678	557
backing strips	VIII-1-86-116	BC87-005	278
base/weld metal	VIII-1-83-163	BC81-576	95
bolted flange	VIII-1-83-91	BC82-738	54
bolting	VIII-1-83-48	BC82-521	28
	VIII-1-83-260	BC84-051	146
	VIII-1-83-310	BC84-266	178
	VIII-1-86-75	BC86-252	254
bored rolled bar	VIII-1-86-128	BC87-043	283
bronze castings	VIII-1-83-121R	BC81-184*	189
calculated stress	VIII-1-92-87	BC92-249	552
case iron	VIII-1-86-91	BC86-235	261
	VIII-1-86-152	BC87-164	298
	VIII-1-86-197	BC87-070	320
certification	VIII-1-83-364	BC85-179	206
	VIII-1-86-38	BC85-608	233
	VIII-1-86-187	BC87-424	312
	VIII-1-89-07	BC87-430	345
	VIII-1-89-28	BC88-182	356
	VIII-1-89-60	BC88-423	370
	VIII-1-92-149	BC93-111	581
combination	VIII-1-89-316	BC90-679	498
controlled-rolled plate	VIII-1-86-220	BC87-041	332
covers	VIII-1-83-170	BC83-208	98
dual certification	VIII-1-86-118	BC87-007	279
	VIII-1-89-65	BC88-437	372
	VIII-1-89-269	BC90-256	480
	VIII-1-92-166	BC93-399	591
ERW Pipe	VIII-1-83-77	BC82-679	42
	VIII-1-83-77R	BC82-679*	550
	VIII-1-86-32	BC85-496	226
	VIII-1-95-17	BC94-411	630
external pressure chart reference	VIII-1-83-84	BC82-545	50
galvanized	VIII-1-83-309	BC84-264	177
hardness testing	VIII-1-86-194	BC86-105	319
identification	VIII-1-89-136	BC89-208	411
	VIII-1-89-146	BC89-251	415
	VIII-1-89-198	BC90-294	438
	VIII-1-89-243	BC90-651	462
	VIII-1-92-141	BC93-036	577
	VIII-1-95-75	BC94-308	663
inspection	VIII-1-83-161	BC83-268	94
	VIII-1-89-116	BC89-204	401
	VIII-1-89-173	BC90-010	430
	VIII-1-89-181	BC90-226	432
	VIII-1-89-182	BC90-236	433

Subject	Interpretation	File No.	Page No.
Materials (Cont'd)			
inspection (Cont'd)			
	VIII-1-92-189	BC93-034	599
	VIII-1-01-152	BC03-659	869
iron castings	VIII-1-83-342	BC84-667	197
	VIII-1-83-352	BC85-016	202
manufacturer	VIII-1-92-07	BC91-301	507
	VIII-1-95-90	BC93-109	675
marking	VIII-1-89-02	BC88-122	343
	VIII-1-89-197	BC90-255	438
	VIII-1-92-89	BC92-216	553
	VIII-1-92-172	BC92-460	593
	VIII-1-98-44	BC98-242	742
Monel	VIII-1-89-50	BC88-358	365
Non-Code	VIII-1-83-60	BC82-659	35
	VIII-1-83-348	BC82-385B	200
		BC83-085	
	VIII-1-86-188	BC87-425	313
nonmetallic	VIII-1-83-361R	BC77-701*	205
nonmetallic view ports	VIII-1-83-256	BC84-030	144
nut	VIII-1-83-310	BC84-266	178
	VIII-1-86-76	BC86-253	255
ordering	VIII-1-92-74	BC91-412	540
P-No. 1	VIII-1-83-155	BC83-197	91
	VIII-1-83-227	BC82-563	130
P-No. 8	VIII-1-83-155	BC83-197	91
product specification	VIII-1-89-194	BC90-345	437
recertification	VIII-1-89-75	BC89-004	380
	VIII-1-92-18	BC91-399	512
	VIII-1-95-109	BC93-669	687
repairs	VIII-1-83-351	BC84-676	201
	VIII-1-95-65	BC94-067B	655
rod or bar (as pressure parts)	VIII-1-92-95	BC87-296	555
SA-20	VIII-1-98-116	BC99-564	784
SA-36	VIII-1-83-45	BC81-038	87
	VIII-1-89-66	BC88-439	372
	VIII-1-95-03	BC94-286	625
SA-47 Gr. 35018	VIII-1-83-190	BC82-197	106
SA-53	VIII-1-86-75	BC86-252	254
SA-53, Type E, Grade B	VIII-1-83-330	BC83-320	191
	VIII-1-86-44	BC85-593	237
	VIII-1-86-209	BC87-474	327
SA-105	VIII-1-83-25	BC82-301	17
	VIII-1-83-189	BC81-531	106
	VIII-1-83-205	BC83-461	114
	VIII-1-89-47	BC88-207	363
	VIII-1-89-178	BC90-224	431
	VIII-1-89-244	BC90-656	462
SA-106	VIII-1-83-95	BC82-787	56
SA-179	VIII-1-82-253	BC83-663	142
SA-198, Gr. 87	VIII-1-83-26	BC82-311	17
	VIII-1-83-37	BC82-314	24
	VIII-1-83-47	BC82-519	28
	VIII-1-83-57	BC91-404	33

Subject	Interpretation	File No.	Page No.
Materials (Cont'd)			
SA-198, Gr. 87 (Cont'd)			
	VIII-1-83-89	BC92-685	53
SA-214	VIII-1-83-253	BC83-663	142
SA-234	VIII-1-83-226	BC81-301	129
SA-263	VIII-1-83-191	BC82-221	107
SA-266 Class 2	VIII-1-86-166	BC87-251	304
SA-285	VIII-1-83-253	BC83-663	142
	VIII-1-89-44	BC88-111	362
SA-312	VIII-1-86-65	BC86-237	246
SA-350	VIII-1-83-205	BC83-461	114
SA-353	VIII-1-86-213	BC88-010	329
SA-372	VIII-1-89-58	BC88-413	369
SA-372, Type 5, Class B	VIII-1-86-62	BC86-218	244
SA-455	VIII-1-83-218	BC83-546	126
SA-479 Gr. XM-19 and XM-29	VIII-1-83-48	BC82-521	28
SA-515 Gr. 60	VIII-1-83-287	BC84-154	158
SA-515 Gr. 70	VIII-1-83-223	BC83-582	128
SA-516	VIII-1-83-226	BC81-301	129
	VIII-1-98-88	BC99-477	767
SA-516 Gr. 70	VIII-1-86-37	BC85-606	233
SA-553 Type I	VIII-1-86-213	BC88-010	329
	VIII-1-98-25	BC97-317	729
SA-575	VIII-1-83-06	BC81-660	8
SA-612	VIII-1-83-231	BC83-235	132
SA-649	VIII-1-89-73	BC88-471	379
	VIII-1-92-14	BC91-220	510
SA-737 Gr. C	VIII-1-83-84	BC82-545	50
SA-789 UNS S31803	VIII-1-86-106	BC86-381	267
SA-790 UNS S31803	VIII-1-86-106	BC86-381	267
Section II	VIII-1-83-296	BC80-251	170
SB designation	VIII-1-83-164	BC81-610	95
SB-75	VIII-1-83-304	BC83-538	176
SB-111	VIII-1-83-188	BC81-443	105
SB-443	VIII-1-83-34	BC82-264	23
SB-637	VIII-1-89-148	BC89-265	416
stock	VIII-1-95-131	BC96-306	695
structural steel	VIII-1-86-103	BC86-370	265
tensile strength	VIII-1-83-245	BC83-642	139
	VIII-1-89-160	BC89-373	420
test report	VIII-1-83-213	BC83-075	124
	VIII-1-92-49	BC90-004	531
thickness	VIII-1-89-62	BC88-427	371
	VIII-1-89-99	BC89-112	389
	VIII-1-89-106	BC89-169	392
tubesheet	VIII-1-89-80	BC89-036	382
Type 304	VIII-1-83-117	BC82-305	67
Type 304L	VIII-1-83-117	BC82-305	67
undertolerance	VIII-1-86-67	BC86-240	247
verification	VIII-1-86-129	BC87-045	283
vessel	VIII-1-83-04	BC81-526	8
	VIII-1-95-107	BC96-122	682
welded pipe	VIII-1-89-64	BC88-429	371
welded stub ends	VIII-1-95-98	BC95-471	678

Subject	Interpretation	File No.	Page No.
Maximum Allowable Working Pressure	VIII-1-92-163	BC93-540	590
	VIII-1-95-114	BC96-215	688
	VIII-1-01-23	BC00-084	802
	VIII-1-01-117	BC02-102a	847
	VIII-1-01-151	BC03-1035	868
Minimum Design Metal Temperature	VIII-1-95-34	BC91-573	643
Multiple Chamber	VIII-1-98-94	BC99-574	774
Nameplates			
abbreviations	VIII-1-89-22	BC88-135	353
additional markings	VIII-1-01-145	BC03-179	865
adhesive attachment	VIII-1-86-30	BC85-487	225
	VIII-1-98-101	BC99-609	777
	VIII-1-01-112	BC99-573	845
attachment	VIII-1-92-13	BC91-210	510
	VIII-1-95-81	BC93-736	666
	VIII-1-95-108	BC96-099	682
bracket	VIII-1-89-18	BC88-106	351
	VIII-1-89-18R	BC88-106*	351
manufacturer's serial number	VIII-1-89-86	BC89-046	384
	VIII-1-89-86R	BC89-046*	550
marking	VIII-1-89-101	BC89-115	390
	VIII-1-89-101R	BC89-115*	623
	VIII-1-89-151	BC89-269	417
	VIII-1-89-228	BC90-427	455
	VIII-1-92-08	BC91-310	507
	VIII-1-92-09	BC91-386	507
	VIII-1-92-09R	BC91-386*	508
	VIII-1-92-09R-2	BC91-386**	527
	VIII-1-92-98	BC92-319	556
	VIII-1-92-159	BC93-481	589
	VIII-1-92-162	BC93-510	590
	VIII-1-92-190	BC93-145	605
	VIII-1-95-17	BC94-411	630
	VIII-1-95-99	BC95-474	678
	VIII-1-01-100	BC01-644	836
	VIII-1-01-103	BC01-724	837
	VIII-1-01-124	BC02-2314	849
painted background	VIII-1-83-249	BC83-650	140
size of markings	VIII-1-83-251	BC83-661	141
temperature range	VIII-1-89-77	BC89-016	381
welded to vessel	VIII-1-86-167	BC87-235	304
when applied	VIII-1-89-71	BC88-459	379
Noncircular Vessels	VIII-1-92-155	BC92-103	583
	VIII-1-92-222	BC93-512	617
	VIII-1-95-10	BC94-291	627
	VIII-1-95-118	BC96-209 (BC96-228)	690
	VIII-1-01-31	BC01-074	805
	VIII-1-01-42	BC01-225	809
	VIII-1-01-60	BC01-297	816

Subject	Interpretation	File No.	Page No.
Noncircular Vessels (Cont'd)			
	VIII-1-01-123	BC02-2310	849
Nondestructive Examination			
ASNT	VIII-1-83-166	BC82-754B	96
	VIII-1-86-01	BC83-535A	213
	VIII-1-89-90	BC88-354	385
bleed out size	VIII-1-83-167	BC82-830	97
calibration of equipment	VIII-1-83-82R	BC80-289*, BC85-158	189
certification	VIII-1-04-21	BC03-1021	878
contractual agreements	VIII-1-86-203	BC86-203	324
fluoroscopy	VIII-1-83-202	BC83-424	113
heavy walled pressure vessels	VIII-1-83-45	BC82-513	27
indication	VIII-1-83-167	BC82-830	97
	VIII-1-83-298	BC82-827	172
	VIII-1-83-306	BC83-592	176
material repairs	VIII-1-83-351	BC84-676	201
multiple duplicate vessels	VIII-1-83-360	BC85-187	204
personnel	VIII-1-83-85	BC82-811	51
	VIII-1-83-156	BC83-201	92
	VIII-1-83-158	BC83-210	93
	VIII-1-83-166	BC82-754B	96
	VIII-1-83-326	BC84-564	184
piping	VIII-1-83-202	BC83-424	113
SNT-TC-1A	VIII-1-83-156	BC83-201	92
	VIII-1-83-158	BC83-210	93
	VIII-1-83-166	BC82-754B	96
visual examination	VIII-1-86-203	BC86-196	324
welds	VIII-1-92-73	BC91-401	540
	VIII-1-92-204	BC93-765	610
Nozzles			
angle of axis	VIII-1-83-219	BC83-556	126
attachment of	VIII-1-83-102	BC82-843	59
	VIII-1-83-120	BC83-030	68
	VIII-1-83-275	BC84-129	153
	VIII-1-86-86	BC86-293	259
	VIII-1-86-88	BC86-300	260
	VIII-1-86-149	BC87-168	297
	VIII-1-86-151	BC87-110	298
	VIII-1-89-13	BC87-254	348
	VIII-1-89-122	BC86-380	405
	VIII-1-89-175	BC90-023	430
	VIII-1-89-215	BC90-291	450
	VIII-1-92-170	BC93-489	593
	VIII-1-92-178	BC93-588	595
	VIII-1-04-35	BC04-685	887
corrosion allowance	VIII-1-89-37	BC88-299	359
design	VIII-1-01-32	BC01-079	806
	VIII-1-01-66	BC01-335	818
interconnected vessels	VIII-1-83-322	BC84-411	182
in weld seam	VIII-1-83-208	BC83-465	115
lining	VIII-1-83-136	BC83-224	76
load paths	VIII-1-83-212	BC82-882	123
material	VIII-1-01-92	BC01-340	833
necks	VIII-1-83-66	BC82-294	38
Nozzles (Cont'd)			
necks (Cont'd)			
	VIII-1-83-05	BC81-651	8
	VIII-1-83-138	BC82-880	77
	VIII-1-83-184	BC83-328	103
	VIII-1-83-199	BC82-226	111
	VIII-1-83-215	BC83-404	125
	VIII-1-83-217	BC83-544	125
	VIII-1-83-302	BC83-332	174
	VIII-1-83-313	BC84-361	179
	VIII-1-86-147	BC87-159	296
	VIII-1-95-01	BC94-217	624
	VIII-1-95-133	BC96-353	701
	VIII-1-98-08	BC97-262	718
	VIII-1-98-18	BC97-517	727
	VIII-1-01-61	BC01-300	816
openings	VIII-1-83-266	BC84-089	148
	VIII-1-89-196	BC90-234	438
	VIII-1-89-196R	BC90-234*	475
	VIII-1-04-12	BC03-1585	875
pipes	VIII-1-83-293	BC84-193	161
	VIII-1-83-76	BC82-678	42
	VIII-1-83-219	BC83-556	126
	VIII-1-83-07R	BC81-664*	189
	VIII-1-98-55	BC98-365	751
	VIII-1-01-01	BC00-388	789
postweld heat treatment	VIII-1-92-80	BC92-167	543
recessed	VIII-1-86-26	BC85-466	223
	VIII-1-89-87	BC85-600	384
reinforcement	VIII-1-83-261	BC84-052	147
	VIII-1-83-285	BC84-141	157
	VIII-1-83-332	BC84-115	192
	VIII-1-83-341	BC84-662	196
	VIII-1-86-50	BC86-079	239
	VIII-1-86-65	BC86-237	246
	VIII-1-86-144	BC87-167	294
	VIII-1-86-151	BC87-110	298
	VIII-1-86-168	BC87-168	305
	VIII-1-89-49	BC88-221	365
	VIII-1-89-313	BC90-470	497
	VIII-1-98-313R	BC90-470*	749
	VIII-1-92-05	BC91-292	506
	VIII-1-92-69	BC91-102	538
	VIII-1-92-69R	BC91-102*	538
	VIII-1-92-119	BC92-388	569
	VIII-1-95-123	BC96-227	692
	VIII-1-98-118	BC00-157	785
	VIII-1-01-119	BC02-2318	848
seamless	VIII-1-83-239	BC83-600	135
	VIII-1-83-240	BC83-602	135
	VIII-1-83-272	BC84-116	152
shear strength	VIII-1-89-36	BC88-183	359
welds	VIII-1-83-22	BC82-289	16
offset	VIII-1-98-85	BC99-300	766
Openings			
access	VIII-1-83-138	BC82-880	77

Subject	Interpretation	File No.	Page No.
Openings (Cont'd)			
access (Cont'd)			
	VIII-1-83-185	BC83-317	103
adjacent	VIII-1-83-75	BC82-677	41
attachment welds	VIII-1-95-89	BC95-472	669
design	VIII-1-95-124	BC96-236	692
flat head	VIII-1-83-359	BC85-138	204
	VIII-1-98-03	BC96-105	716
flued openings	VIII-1-86-45	BC86-602	237
head	VIII-1-83-14	BC82-191	12
	VIII-1-92-47	BC91-628	531
inspection	VIII-1-83-138	BC82-880	77
	VIII-1-83-336	BC84-599	194
	VIII-1-86-31	BC85-488	225
	VIII-1-89-93	BC89-078	386
large	VIII-1-83-195	BC83-007	109
	VIII-1-98-83	BC99-370	765
maximum size	VIII-1-83-61	BC83-661	35
	VIII-1-92-154	BC93-359	583
multiple	VIII-1-83-35	BC82-273	23
	VIII-1-83-75	BC82-677	41
	VIII-1-83-94	BC82-784	55
	VIII-1-83-324	BC84-430	183
	VIII-1-98-02	BC95-461, BC96-538	716
nozzle	VIII-1-83-266	BC84-089	148
	VIII-1-89-120	BC89-231	403
	VIII-1-98-117	BC00-156	784
	VIII-1-04-03	BC02-2796	873
rectangular flat cover	VIII-1-83-286	BC84-153	158
in rectangular vessels	VIII-1-86-56	BC86-198	242
reinforcement	VIII-1-83-150	BC83-120	88
	VIII-1-83-208	BC83-465	115
	VIII-1-83-238	BC83-599	135
	VIII-1-83-244	BC83-638	138
	VIII-1-83-323	BC84-429	182
	VIII-1-83-324	BC84-430	183
	VIII-1-86-83	BC85-465	257
	VIII-1-04-04	BC03-991	873
threaded	VIII-1-83-358	BC85-124	204
	VIII-1-86-155	BC87-183	299
	VIII-1-86-160	BC87-194	302
	VIII-1-86-176	BC87-383	307
	VIII-1-92-136	BC93-031	575
vessel	VIII-1-83-46	BC82-518	28
	VIII-1-83-206	BC83-463	114
	VIII-1-89-276	BC91-014	483
Out-of-Roundness	VIII-1-92-127	BC92-275	572
	VIII-1-95-78	BC94-111	665
Overpressure Protection	VIII-1-01-07	BC00-501	792
	VIII-1-01-10	BC98-291	793
	VIII-1-01-111	BC99-084	845
	VIII-1-04-38	BC01-910	889

Subject	Interpretation	File No.	Page No.
Parts			
dimpled or embossed assemblies	VIII-1-86-20	BC85-327	220
insulation pins	VIII-1-83-97	BC82-806	56
made to superseded revisions	VIII-1-83-318	BC82-270B	180
manufacture	VIII-1-83-345	BC84-677	198
miscellaneous	VIII-1-89-145	BC89-242	414
	VIII-1-89-320	BC91-265	499
	VIII-1-92-120	BC92-405	570
nonmetallic view ports	VIII-1-89-256R	BC84-030*	377
pressure	VIII-1-83-300	BC83-273	173
	VIII-1-83-330	BC83-320	191
	VIII-1-86-114	BC87-001	277
	VIII-1-86-200	BC87-473	322
	VIII-1-95-150	BC96-523	707
stamping	VIII-1-83-346	BC84-695	199
	VIII-1-89-154	BC89-285	418
standard	VIII-1-98-68	BC99-218	755
studs	VIII-1-83-97	BC82-806	56
	VIII-1-83-109	BC82-195	63
threaded	VIII-1-83-186R	BC83-071A	104
Peening	VIII-1-83-255	BC83-683	144
	VIII-1-89-307	BC91-116	494
	VIII-1-92-161	BC93-513	590
Piping			
ERW	VIII-1-83-77	BC82-679	42
	VIII-1-83-180	BC83-311	101
	VIII-1-83-357	BC85-096	203
	VIII-1-89-104	BC89-126	391
	VIII-1-92-25	BC91-474	515
	VIII-1-92-25R	BC91-474*	605
examination	VIII-1-82-202	BC83-424	113
fittings	VIII-1-83-174	BC83-266	99
geometric scope	VIII-1-83-329	BC82-755	191
joint factor	VIII-1-83-152	BC83-167	90
mill test reports	VIII-1-89-98	BC89-111	389
partial data reports	VIII-1-89-95	BC89-082	387
spiral	VIII-1-83-308	BC84-156	177
standard wall	VIII-1-83-199	BC83-226	111
stress values	VIII-1-83-152	BC83-167	90
thermal expansion	VIII-1-86-172	BC85-288	306
thickness	VIII-1-86-11	BC85-287	217
	VIII-1-92-85	BC92-240	551
welded	VIII-1-83-152	BC83-167	90
Planes			
in shell	VIII-1-83-16	BC82-223	13
plate thickness	VIII-1-98-80	BC99-362	764
Pneumatic Test			
gas leaking test	VIII-1-01-26	BC01-81	803
in lieu of hydrostatic test	VIII-1-83-04	BC81-526	8
	VIII-1-86-75	BC86-252	254
	VIII-1-92-84	BC92-220	551

Subject	Interpretation	File No.	Page No.
Pneumatic Test (Cont'd)			
in lieu of hydrostatic test (Cont'd)			
	VIII-1-95-147	BC96-472	706
pressurization	VIII-1-92-204	BC93-765	610
	VIII-1-01-55	BC01-226	814
Postweld Heat Treatment			
attachments	VIII-1-83-13	BC81-180	12
	VIII-1-89-212	BC90-493	449
	VIII-1-89-212R	BC90-493*	449
	VIII-1-98-110	BC00-082	781
circumferential band	VIII-1-83-30	BC82-166	21
	VIII-1-83-315	BC84-385	179
exemptions	VIII-1-83-335	BC84-384	193
	VIII-1-89-284	BC90-863	486
	VIII-1-92-182	BC93-647	597
	VIII-1-92-183	BC93-648	597
	VIII-1-92-183R	BC93-648*	597
holding temperature	VIII-1-83-103	BC82-873	59
	VIII-1-83-165	BC82-736	96
	VIII-1-83-168	BC83-084	97
	VIII-1-83-307	BC83-636	176
	VIII-1-89-232	BC90-481	457
	VIII-1-89-232R	BC90-481*	457
	VIII-1-01-143	BC02-2819	865
hot-formed head	VIII-1-86-222	BC88-048	333
lined vessels	VIII-1-83-207	BC83-464	114
	VIII-1-98-108	BC00-080	780
material	VIII-1-95-37	BC93-735	644
P-No. 1 material	VIII-1-83-155	BC83-197	91
	VIII-1-83-165	BC82-736	96
	VIII-1-86-06	BC85-245	215
	VIII-1-83-168	BC83-084	97
	VIII-1-83-175	BC83-283	100
	VIII-1-86-41	BC85-468	235
	VIII-1-86-125R	BC87-019*	293
P-No. 3 material	VIII-1-83-168	BC83-084	97
	VIII-1-89-289	BC90-693	488
P-No. 4 material	VIII-1-83-168	BC83-084	97
	VIII-1-92-104	BC92-290	558
P-No. 5 material	VIII-1-86-204	BC85-509	324
	VIII-1-92-153	BC93-358	582
P-No. 8 material	VIII-1-83-155	BC83-197	91
P-No. 10C material	VIII-1-83-271	BC84-113	151
P-No. 1 to P-No. 8 materials	VIII-1-86-17	BC85-323	219
preheating	VIII-1-83-49	BC82-546	29
	VIII-1-92-176	BC93-641	595
pressure to nonpressure parts	VIII-1-83-237	BC83-598	134
procedures	VIII-1-89-288	BC90-437	487
shell-to-nozzle attachments	VIII-1-83-175	BC83-283	100
shell-to-tubesheet	VIII-1-89-186	BC90-305	434
strength welds	VIII-1-83-119	BC82-411	68
test specimens	VIII-1-83-32	BC82-240	22
	VIII-1-83-227	BC82-563	130
	VIII-1-89-300	BC91-194	491
thickness	VIII-1-86-55	BC86-114	241
Postweld Heat Treatment (Cont'd)			
thickness (Cont'd)			
	VIII-1-86-207	BC87-290	326
	VIII-1-89-30	BC88-192	357
	VIII-1-89-63	BC88-428	371
	VIII-1-89-293	BC91-049	489
	VIII-1-95-134	BC96-255	701
time at temperature	VIII-1-83-114	BC81-130	65
	VIII-1-83-165	BC82-736	96
	VIII-1-89-229	BC90-438	456
tube-to-tubesheet joints	VIII-1-83-20	BC82-259	15
	VIII-1-86-80	BC86-268	256
	VIII-1-95-33	BC88-084	642
	VIII-1-98-99	BC99-597	776
Type 316	VIII-1-83-18	BC82-242	14
vessels	VIII-1-83-74	BC82-664	41
	VIII-1-83-100	BC82-825	58
	VIII-1-95-137	BC96-334	703
weld overlays	VIII-1-83-189	BC81-531	106
	VIII-1-83-192	BC82-655	108
weld joints	VIII-1-01-130	BC02-2793	855
	VIII-1-04-17	BC03-1320	877
weld seams	VIII-1-01-52	BC01-216	813
	VIII-1-01-87	BC01-588	831
Proof Test	VIII-1-89-309	BC87-382	495
	VIII-1-92-117	BC92-056	563
	VIII-1-92-140	BC93-052	577
	VIII-1-92-196	BC93-734	607
Pressure			
maximum allowable	VIII-1-83-108	BC80-053	62
	VIII-1-83-333	BC84-125	192
	VIII-1-86-186	BC87-405	312
parts	VIII-1-89-236	BC90-625	458
	VIII-1-89-282	BC90-791	485
	VIII-1-95-122	BC96-219	691
	VIII-1-98-47	BC98-296	743
	VIII-1-01-22	BC00-703	801
	VIII-1-01-31	BC01-074	805
pressure gages	VIII-1-83-243	BC83-633	137
	VIII-1-89-89	BC88-208	385
rapid pressure fluctuations	VIII-1-86-155	BC87-183	299
rating	VIII-1-83-257	BC84-032	145
static head	VIII-1-86-115	BC87-004	277
Pressure Relief Devices			
attachment	VIII-1-86-205	BC86-370	325
	VIII-1-89-312	BC90-343	496
	VIII-1-89-312R	BC90-343*	527
automatic controls	VIII-1-98-06	BC96-259	717
back pressure	VIII-1-83-28	BC80-607	19
buckling pin	VIII-1-92-133	BC92-093	574
capacity certification	VIII-1-86-52	BC85-486	240
coating	VIII-1-92-200	BC93-501A	609
determination of capacity	VIII-1-92-150	BC93-112	581

Subject	Interpretation	File No.	Page No.
Pressure Relief Devices (Cont'd)			
determination of capacity (Cont'd)			
	VIII-1-01-102	BC01-702	837
jacketed vessel	VIII-1-98-59	BC97-398	752
lifting devices	VIII-1-83-33	BC82-260	22
liquid relief valves	VIII-1-86-57	BC86-199	242
materials	VIII-1-92-152	BC93-138	582
	VIII-1-92-177	BC93-583a	595
	VIII-1-01-128	BC02-3595	855
overpressure protection	VIII-1-89-118	BC89-207	402
	VIII-1-98-90	BC99-447	768
pilot operated	VIII-1-92-223	BC94-230	618
	VIII-1-01-96	BC01-701	835
piping	VIII-1-86-100	BC86-317	265
positive control	VIII-1-83-39	BC81-268	20
	VIII-1-89-117	BC89-205	402
	VIII-1-98-64	BC97-280	754
presetting valve springs	VIII-1-83-129	BC81-583	72
rupture disk	VIII-1-83-51	BC82-405	30
	VIII-1-83-69	BC82-511	39
	VIII-1-86-157	BC87-190	300
	VIII-1-98-06	BC96-259	717
	VIII-1-98-43	BC98-178	742
	VIII-1-98-71	BC98-522	756
safety valve	VIII-1-83-27	BC80-198	18
	VIII-1-83-197	BC83-039	110
	VIII-1-83-278	BC82-860	154
	VIII-1-83-280	BC83-591	155
	VIII-1-86-126	BC86-215	282
	VIII-1-04-40	BC04-583	890
safety valve/rupture disk combination	VIII-1-83-194	BC82-740	109
size	VIII-1-86-33	BC85-502	226
	VIII-1-89-304	BC91-012	493
stamping	VIII-1-89-303	BC90-864A	492
	VIII-1-92-212	BC94-190	614
stop valve	VIII-1-83-338	BC84-615	195
	VIII-1-92-67	BC92-055	537
	VIII-1-92-132	BC90-728	574
supplemental devices	VIII-1-98-73	BC99-293	757
	VIII-1-01-94	BC01-649	834
test	VIII-1-01-95	BC01-692	834
valve certification	VIII-1-83-106	BC79-720	61
	VIII-1-83-319	BC83-223C	181
valve chatter	VIII-1-83-106	BC79-720	61
valve flutter	VIII-1-83-106	BC79-720	61
valve machining	VIII-1-04-26	BC03-1329	884
valve recertification	VIII-1-83-106	BC79-720	61
valve set pressure	VIII-1-83-350	BC84-602	201
	VIII-1-89-70	BC88-386	378
	VIII-1-89-315	BC90-631	498
valve welding	VIII-1-83-186R	BC83-071A*	104
Proof Test	VIII-1-01-65	BC01-333	818

Subject	Interpretation	File No.	Page No.
Quality Control			
acceptance criteria	VIII-1-92-106	BC92-304	559
Data Report Forms	VIII-1-83-112	BC83-032	64
inspectors' duties	VIII-1-83-349	BC84-335	200
manual	VIII-1-92-203	BC94-059	610
material certification	VIII-1-95-56	BC92-332	652
multilocation organization	VIII-1-98-66	BC98-307	754
multiple duplicate vessels	VIII-1-83-79	BC82-684	43
	VIII-1-86-113	BC86-522	277
nondestructive examination	VIII-1-83-82	BC80-289	49
	VIII-1-83-166	BC82-754B	96
record retention	VIII-1-86-169	BC87-299	305
required examination	VIII-1-86-131	BC87-079	284
UM vessels	VIII-1-86-161	BC87-197	302
verification of material	VIII-1-86-129	BC87-045	283
welding	VIII-1-83-79	BC82-684	43
	VIII-1-89-250	BC90-725	465
Radiography			
accessibility	VIII-1-83-07	BC81-664	9
	VIII-1-83-45	BC82-513	27
	VIII-1-83-46	BC82-518	28
	VIII-1-83-50	BC82-624	29
	VIII-1-83-220	BC83-557	127
before forming	VIII-1-83-171	BC83-212	98
bleed-out size	VIII-1-83-167	BC82-830	97
corner joint	VIII-1-83-272	BC84-116	152
dished heads/shells	VIII-1-83-122	BC82-549	69
ERW pipe	VIII-1-83-77	BC82-679	42
filmless	VIII-1-83-241	BC83-603A	136
flanges	VIII-1-83-02	BC81-213	7
	VIII-1-83-122	BC82-549	69
	VIII-1-86-140	BC87-171	293
heads	VIII-1-83-177	BC83-286	100
	VIII-1-83-246	BC83-643	139
head-to-shell	VIII-1-83-196	BC83-019	110
high alloy steels	VIII-1-86-16	BC85-321	219
incomplete fusion	VIII-1-83-133R	BC82-718*	87
indications	VIII-1-83-53	BC81-056	31
	VIII-1-83-167	BC82-830	97
	VIII-1-83-221	BC83-578	127
	VIII-1-83-298	BC82-827	172
	VIII-1-83-306	BC83-592	176
and inspector	VIII-1-86-42	BC85-591	236
	VIII-1-89-54	BC88-390	367
intersections	VIII-1-86-73	BC85-189	253
material	VIII-1-89-299	BC91-050	491
mottling	VIII-1-83-53	BC81-056	31
multiple duplicate vessels	VIII-1-83-360	BC85-187	204
	VIII-1-89-101	BC89-115	390
pad type connection	VIII-1-83-262	BC84-053	147
partial	VIII-1-83-231	BC83-235	132
personnel	VIII-1-83-156	BC83-201	92
	VIII-1-83-166	BC82-754B	96

Subject	Interpretation	File No.	Page No.
Radiography (Cont'd)			
personnel (Cont'd)			
	VIII-1-98-87	BC99-457	767
pipe	VIII-1-83-201	BC83-420	112
postweld heat treatment	VIII-1-98-09	BC97-263	719
	VIII-1-98-09R	BC03-268*	861
prior to final machining	VIII-1-83-62	BC81-685B	36
records	VIII-1-83-248	BC83-649	140
repair	VIII-1-89-251	BC90-743	465
	VIII-1-92-34	BC91-007	519
	VIII-1-98-37	BC98-246	740
requirements	VIII-1-83-64	BC82-125	37
	VIII-1-86-202	BC87-408	323
	VIII-1-89-221	BC90-510	452
	VIII-1-89-222	BC90-522	453
	VIII-1-95-137	BC96-334	703
retention	VIII-1-89-167	BC89-415	428
review by AI	VIII-1-86-19	BC85-326	220
	VIII-1-89-54	BC88-390	367
rounded indication	VIII-1-83-133R	BC82-718*	87
	VIII-1-92-169	BC93-485	592
	VIII-1-95-136	BC96-277	702
	VIII-1-98-14	BC96-477	726
	VIII-1-04-18	BC03-1647	877
spot	VIII-1-83-22	BC82-289	16
	VIII-1-83-63	BC82-027	36
	VIII-1-83-86	BC82-813	51
	VIII-1-83-101	BC82-840	58
	VIII-1-83-141	BC82-833	78
	VIII-1-83-191	BC82-221	107
	VIII-1-83-305	BC83-568	175
	VIII-1-86-159	BC87-192	301
	VIII-1-92-32	BC91-518	518
	VIII-1-92-82	BC92-171	544
	VIII-1-95-71	BC95-218	662
	VIII-1-95-86	BC95-400	668
	VIII-1-95-87	BC95-463	669
	VIII-1-98-22	BC97-519	728
	VIII-1-98-53	BC98-290	750
	VIII-1-98-109	BC00-081	781
tubesheet	VIII-1-83-203	BC83-429	113
tungsten inclusions	VIII-1-86-43	BC85-592	236
and ultrasonic examination	VIII-1-81-16R	BC81-019*, BC83-018	167
valves	VIII-1-83-186R	BC83-071A*	104
welds	VIII-1-89-191	BC90-350	436
	VIII-1-89-292	BC91-046	489
	VIII-1-95-63	BC95-167	654
	VIII-1-98-46	BC98-293	743
Reference Standards	VIII-1-01-108	BC01-795	839
Reinforcement			
area	VIII-1-83-98	BC82-807	57
	VIII-1-83-179	BC83-306	101
	VIII-1-86-229	BC88-085	336
cone	VIII-1-83-131	BC82-209	73

Subject	Interpretation	File No.	Page No.
Reinforcement (Cont'd)			
cone (Cont'd)			
	VIII-1-83-139	BC83-132	77
	VIII-1-83-321	BC84-381	182
	VIII-1-86-158	BC87-191	301
heads	VIII-1-83-181	BC83-215	102
	VIII-1-92-151	BC93-114	582
	VIII-1-92-151R	BC93-114*	675
	VIII-1-01-105	BC01-336	838
jackets	VIII-1-92-116	BC90-657	563
limits	VIII-1-92-17	BC91-268	512
	VIII-1-92-42	BC91-089	529
nozzle	VIII-1-83-240	BC83-602	135
	VIII-1-83-261	BC84-052	147
	VIII-1-83-277	BC84-142	154
	VIII-1-83-285	BC84-141	157
	VIII-1-83-289	BC84-158	159
	VIII-1-83-332	BC84-115	192
	VIII-1-92-119	BC92-388	569
openings	VIII-1-83-94	BC82-784	55
	VIII-1-83-150	BC83-120	88
	VIII-1-83-238	BC83-599	135
	VIII-1-83-324	BC84-430	183
	VIII-1-89-72	BC88-467	379
	VIII-1-89-83	BC89-060	383
	VIII-1-89-149	BC89-304	416
	VIII-1-89-171	BC90-006	429
	VIII-1-89-213	BC90-495	450
	VIII-1-92-25	BC91-474	515
	VIII-1-95-121	BC96-217	691
	VIII-1-95-152	BC96-527	708
	VIII-1-01-08	BC00-564	792
	VIII-1-01-90	BC01-639	832
	VIII-1-01-91	BC01-640	833
	VIII-1-01-125	BC96-381	850
rings	VIII-1-83-40	BC82-402	25
	VIII-1-83-315	BC84-385	179
	VIII-1-83-325	BC84-545	183
saddles	VIII-1-86-18	BC85-324	219
shell	VIII-1-83-261	BC84-052	147
	VIII-1-83-277	BC84-142	154
	VIII-1-83-289	BC84-158	159
Repairs			
before stamping	VIII-1-83-83	BC81-267	50
bronze castings	VIII-1-83-121R-2	BC81-184*	189
cast iron vessels	VIII-1-86-137	BC87-117	287
clad material	VIII-1-83-191	BC82-221	107
defect removal	VIII-1-83-107	BC82-169	62
	VIII-1-89-305	BC91-103	493
dents	VIII-1-83-148	BC82-403	88
iron castings	VIII-1-83-342	BC84-667	197
	VIII-1-83-352	BC85-016	202
locations	VIII-1-83-141	BC82-833	78
material	VIII-1-83-351	BC84-676	201
	VIII-1-86-97	BC86-273	263

Subject	Interpretation	File No.	Page No.
Repairs (Cont'd)			
material (Cont'd)			
	VIII-1-92-193	BC94-012	606
porosity defects	VIII-1-83-121R	BC81-184*	168
vessels	VIII-1-83-134	BC83-151	75
welds	VIII-1-83-59	BC81-656	34
	VIII-1-83-63	BC82-027	36
	VIII-1-83-344	BC84-675	198
Rupture Disk Device	VIII-1-01-112	BC99-573	845
Safety Relief Devices	VIII-1-89-254	BC90-542	466
	VIII-1-89-262	BC89-109	476
	VIII-1-92-132	BC90-728	574
	VIII-1-92-132R	BC90-728*	624
	VIII-1-92-43	BC91-560	529
	VIII-1-92-48	BC92-005	531
	VIII-1-92-94	BC92-116	555
	VIII-1-92-94R	BC92-116*	675
	VIII-1-92-99	BC92-321	557
	VIII-1-92-111	BC92-351	561
	VIII-1-92-188	BC92-207	599
	VIII-1-95-25	BC94-058	632
	VIII-1-95-36	BC93-637	644
	VIII-1-95-79	BC94-620	665
	VIII-1-95-95	BC94-267	677
	VIII-1-95-97	BC91-445	678
	VIII-1-95-143	BC95-489	705
	VIII-1-98-17	BC97-443	727
	VIII-1-98-42	BC97-266	741
	VIII-1-01-03	BC00-391	790
	VIII-1-01-11	BC00-047	793
	VIII-1-01-13	BC00-679	794
	VIII-1-01-16	BC00-676	799
	VIII-1-04-13	BC03-1789	876
Scope			
air distribution manifolds	VIII-1-86-85	BC86-292	258
boundary	VIII-1-89-29	BC88-189	357
	VIII-1-89-261	BC90-652	476
	VIII-1-95-88	BC95-466	669
	VIII-1-98-54	BC98-336	750
	VIII-1-01-28	BC00-705	804
	VIII-1-01-99	BC01-326	836
certificate of authorization	VIII-1-89-286	BC89-303	486
directly fired vessels	VIII-1-86-35	BC85-522	227
	VIII-1-95-84	BC95-390	668
exemptions	VIII-1-89-168	BC89-437	428
	VIII-1-89-176	BC90-020	431
	VIII-1-89-203	BC90-257	441
	VIII-1-89-231	BC90-479	456
	VIII-1-92-215	BC94-050	615
	VIII-1-95-44	BC94-669	647
	VIII-1-95-48	BC94-670	649
	VIII-1-95-52	BC95-047	650
	VIII-1-95-74	BC94-118	663

Subject	Interpretation	File No.	Page No.
Scope (Cont'd)			
exemptions (Cont'd)			
	VIII-1-95-130	BC96-380	694
	VIII-1-98-15	BC98-088	726
	VIII-1-98-19	BC97-444	727
	VIII-1-98-89	BC99-479	767
	VIII-1-98-112	BC00-096	782
	VIII-1-01-04	BC00-500	790
	VIII-1-01-09	BC00-596	793
	VIII-1-01-15	BC00-664	799
	VIII-1-01-97	BC00-465	835
	VIII-1-01-98	BC01-227	836
	VIII-1-04-33	BC03-1277	887
external piping	VIII-1-83-282	BC84-137	156
	VIII-1-83-329	BC82-755	191
	VIII-1-86-193	BC85-222	319
design calculations	VIII-1-98-81	BC99-373	765
filter presses	VIII-1-92-164	BC93-503	591
filter tanks	VIII-1-89-03	BC88-123	343
heat exchangers	VIII-1-89-59	BC88-422	369
	VIII-1-95-77	BC94-586	664
hot water heating boilers	VIII-1-86-124	BC87-071	281
hot water supply tanks	VIII-1-86-98	BC86-301	264
	VIII-1-86-132	BC87-107	285
	VIII-1-86-136	BC87-116	287
	VIII-1-04-20	BC03-915	878
hydraulic turbine	VIII-1-89-46	BC88-174	363
immersion heater	VIII-1-95-128	BC95-396	694
indirect-fired storage water heater	VIII-1-86-164	BC87-291	303
jacket	VIII-1-04-37	BC04-346	888
jacketed kettles	VIII-1-89-31	BC88-201	357
liquid capacity	VIII-1-86-13	BC85-291	218
multi-chambered vessels	VIII-1-04-10	BC03-1192	875
pressure	VIII-1-83-259	BC84-050	146
	VIII-1-86-142	BC87-161	294
	VIII-1-86-143	BC87-165	294
	VIII-1-86-145	BC87-169	295
	VIII-1-86-154	BC87-175	299
	VIII-1-89-01	BC88-119	343
proprietary connections	VIII-1-86-224	BC88-051	334
	VIII-1-98-57	BC98-368	751
quick actuating closures	VIII-1-83-258	BC84-033	145
screw feeders or conveyors	VIII-1-86-94	BC86-257	262
size	VIII-1-83-259	BC84-050	146
	VIII-1-86-211	BC88-007	328
stamping	VIII-1-98-24	BC98-115	729
	VIII-1-01-74	BC01-321	825
steam chambers	VIII-1-86-163	BC87-202	303
	VIII-1-89-147	BC89-255	415
	VIII-1-92-139	BC93-032	576
steam coil generators	VIII-1-86-87	BC86-295	259
steam generator	VIII-1-01-33	BC01-091	806

Subject	Interpretation	File No.	Page No.
Scope (Cont'd)			
steam generator (Cont'd)			
	VIII-1-04-31	BC03-775	886
steam drum	VIII-1-86-60	BC86-211	244
stress	VIII-1-95-02	BC94-281	625
threaded plugs	VIII-1-92-208	BC94-114	612
UM stamped vessels	VIII-1-86-89	BC86-313	264
	VIII-1-86-165	BC87-250	304
volume	VIII-1-83-259	BC84-050	146
	VIII-1-89-235	BC90-534	458
water containing capacity	VIII-1-83-247	BC83-648	140
Service Restrictions			
design temperatures	VIII-1-83-250	BC83-652A	141
	VIII-1-83-309	BC84-264	177
examination	VIII-1-92-114	BC92-376	562
lethal service	VIII-1-83-10	BC82-164	10
	VIII-1-83-76	BC82-678	42
	VIII-1-83-365	BC85-194	207
	VIII-1-98-97	BC99-522	775
low temperature service	VIII-1-82-49	BC82-546	29
	VIII-1-83-118	BC82-397	67
	VIII-1-83-126	BC83-073	71
	VIII-1-83-127	BC83-083	71
	VIII-1-82-45	BC81-038	87
	VIII-1-83-253	BC83-663	142
	VIII-1-83-270	BC84-106	151
	VIII-1-83-279	BC83-318	155
	VIII-1-89-156	BC88-052	419
	VIII-1-95-138	BC96-341A	703
noncorrosive	VIII-1-83-336	BC84-599	194
Shells			
alignment	VIII-1-83-140	BC82-285	78
	VIII-1-86-63	BC86-234	245
	VIII-1-86-212	BC88-008	329
conical	VIII-1-83-236	BC83-597	134
courses	VIII-1-83-159	BC83-262	93
drilled holes	VIII-1-86-102	BC86-322	266
dummy layer	VIII-1-83-151	BC82-652	89
ERW pipe	VIII-1-83-357	BC85-096	203
	VIII-1-98-12	BC97-283	717
flat spots	VIII-1-86-198	BC87-108	321
radius	VIII-1-83-95	BC82-787	56
roundness templates	VIII-1-83-297	BC82-122	171
seamless	VIII-1-83-11	BC82-165	11
	VIII-1-83-42	BC82-416	26
	VIII-1-83-145	BC83-200	80
	VIII-1-83-203	BC83-429	113
	VIII-1-83-355	BC85-066	203
section	VIII-1-92-31	BC91-517	518
spiral	VIII-1-83-308	BC84-156	177
stiffening rings	VIII-1-83-297	BC82-122	171
	VIII-1-86-107	BC86-447	268
	VIII-1-89-66	BC88-439	372
thickness	VIII-1-83-151	BC82-652	89

Subject	Interpretation	File No.	Page No.
Shells (Cont'd)			
thickness (Cont'd)			
	VIII-1-83-211	BC82-417	123
	VIII-1-83-228	BC82-824	130
	VIII-1-83-362	BC83-559	205
	VIII-1-86-36	BC85-599	233
	VIII-1-86-177	BC87-390	308
	VIII-1-86-179	BC87-073	309
	VIII-1-86-214	BC88-011	329
	VIII-1-86-225	BC88-053	334
	VIII-1-89-121	BC88-121	404
	VIII-1-89-156	BC88-052	419
	VIII-1-04-08	BC03-1347	874
Stamping			
arrangement	VIII-1-83-328	BC82-284	190
Code	VIII-1-83-269	BC84-105	150
	VIII-1-89-246	BC90-650	463
	VIII-1-92-10	BC91-387	508
	VIII-1-92-53	BC91-384	533
	VIII-1-95-101	BC95-498B	679
external pressure construction	VIII-1-83-140	BC82-285	78
heat exchangers	VIII-1-81-89R	BC81-258*	6
hyperbaric vessels	VIII-1-83-361R	BC77-701*	205
jacketed vessels	VIII-1-86-127	BC86-285	282
multichamber	VIII-1-92-75	BC91-467	541
parts	VIII-1-83-65	BC82-293	37
	VIII-1-83-346	BC84-695	199
	VIII-1-86-133	BC87-109	285
pressure relief devices	VIII-1-83-69	BC82-511	39
radiographed vessels	VIII-1-86-146	BC87-158	295
	VIII-1-86-148	BC87-162	296
	VIII-1-89-318	BC90-685	499
repairs	VIII-1-83-83	BC81-267	50
reshaping for Division 2	VIII-1-86-162	BC87-199	303
statement of policy	VIII-1-92-76	BC92-152	541
UM	VIII-1-83-111	BC83-022	63
	VIII-1-86-119	BC87-009	279
	VIII-1-95-144	BC96-240	705
Standard Pressure Parts	VIII-1-95-21	BC94-494	631
	VIII-1-98-55	BC98-365	751
Staybolts	VIII-1-92-143	BC93-105	578
Stiffening	VIII-1-95-13	BC94-131	628
	VIII-1-98-116	BC00-155 (BC00-267)	784
Stiffening Ring	VIII-1-92-68	BC92-101	538
	VIII-1-92-147	BC93-418	580
	VIII-1-92-198	BC92-219	608
	VIII-1-95-110	BC95-401	687
	VIII-1-98-04	BC96-475	717
	VIII-1-98-103	BC99-611	778
	VIII-1-98-104	BC98-175	779
	VIII-1-01-126	BC02-2744	850

Subject	Interpretation	File No.	Page No.
Stress Values			
allowable compressive	VIII-1-83-92R	BC82-756*	121
allowables	VIII-1-83-174	BC83-266	99
	VIII-1-83-180	BC83-311	101
	VIII-1-83-218	BC83-546	126
	VIII-1-83-239	BC83-600	135
	VIII-1-83-287	BC84-154	158
	VIII-1-83-07R	BC81-664*	189
	VIII-1-86-32	BC85-496	226
	VIII-1-89-160	BC89-373	420
	VIII-1-89-237	BC90-627	459
	VIII-1-92-44	BC91-564	530
	VIII-1-01-106	BC01-521	838
bolting	VIII-1-83-128	BC83-072	72
different	VIII-1-83-211	BC82-417	123
increased	VIII-1-83-57	BC81-404	33
low temperature	VIII-1-83-270	BC84-106	151
	VIII-1-01-29	BC01-094	804
	VIII-1-04-16	BC03-1319	877
metric values	VIII-1-89-09	BC84-661	346
ratio of	VIII-79-13R	BC78-847*, BC81-433*	5
	VIII-1-83-260	BC84-051	146
reduction factor	VIII-1-83-02	BC81-213	7
	VIII-1-83-242	BC83-604	136
	VIII-1-83-289	BC84-158	159
shear	VIII-1-95-39	BC94-567	645
tubesheets	VIII-1-83-203	BC83-429	113
welded pipe or tubing	VIII-1-83-152	BC83-167	90
yield strength	VIII-1-83-287	BC84-154	158
Taper	VIII-1-92-45	BC91-567	530
Tapped Holes	VIII-1-89-161	BC89-374	420
	VIII-1-92-70	BC91-308	539
	VIII-1-95-125	BC96-249	692
Telltale Holes	VIII-1-89-208	BC90-467	448
	VIII-1-89-255	BC90-655	467
Temperature			
minimum design	VIII-1-89-100	BC89-114	389
	VIII-1-89-127	BC88-430	407
	VIII-1-89-132	BC89-160	409
	VIII-1-89-137	BC89-209	411
	VIII-1-89-138	BC89-217	411
	VIII-1-95-153	BC96-233	708
Test Gages	VIII-1-89-207	BC90-405	447
	VIII-1-89-207R	BC90-405*	447
Test Plates			
heat treatment	VIII-1-83-116	BC81-559	66
Thickness			
minimum	VIII-1-95-119	BC96-210	690
Thickness (Cont'd)			
minimum (Cont'd)			
	VIII-1-95-145	BC96-245	705
	VIII-1-98-58	BC98-526	752
nominal	VIII-1-92-72	BC91-303	539
	VIII-1-95-96	BC95-164	677
Threaded Connections	VIII-1-95-23	BC94-416	632
Tolerance	VIII-1-01-85	BC01-325	830
Tubes			
bending	VIII-1-86-170	BC84-170	305
finned	VIII-1-98-01	BC96-536	716
	VIII-1-98-79	BC99-358	764
joint factor	VIII-1-83-152	BC83-167	90
straight	VIII-1-83-169	BC83-113	97
stress values	VIII-1-83-152	BC83-167	90
welded	VIII-1-83-152	BC83-167	90
Tubesheets			
connections	VIII-1-83-42	BC82-416	26
	VIII-1-95-18	BC92-326	630
	VIII-1-98-34	BC98-225	738
corner joints	VIII-1-83-195	BC83-007	109
design	VIII-1-83-157	BC83-207	92
	VIII-1-89-20	BC88-125	352
	VIII-1-92-88	BC92-170	553
	VIII-1-98-69	BC99-271	755
	VIII-1-04-19	BC03-1648	878
	VIII-1-04-23	BC03-1825	879
	VIII-1-04-28	BC04-043	885
	VIII-1-04-41	BC04-864	890
extension	VIII-1-83-176	BC83-285	100
joints	VIII-1-83-56	BC81-403	33
	VIII-1-83-161	BC83-268	94
layered construction	VIII-1-83-354	BC85-028	202
PWHT of weld overlay	VIII-1-83-189	BC81-531	106
radiography	VIII-1-83-203	BC83-429	113
	VIII-1-95-146	BC96-376	706
tube-to-tubesheet joint	VIII-1-83-10	BC82-164	10
	VIII-1-89-32	BC88-202	358
	VIII-1-89-92	BC89-076	386
Ultrasonic Examination			
heat exchangers	VIII-1-83-50	BC82-624	29
heavy wall vessels	VIII-1-83-45	BC82-513	27
imperfections	VIII-1-92-36	BC91-115	520
radiography	VIII-1-81-16R	BC81-019*, BC83-018	167
reference level	VIII-1-89-170	BC90-005	429
	VIII-1-89-187	BC90-303	435
	VIII-1-98-16	BC97-440	726
welded joints	VIII-1-95-157	BC96-337, BC96-368	710
Undertolerance	VIII-1-89-164	BC89-411	427

Subject	Interpretation	File No.	Page No.
Undertolerance (Cont'd)			
	VIII-1-98-33	BC98-180	738
	VIII-1-98-84	BC99-222	766
User Requirements	VIII-1-95-74	BC94-118	663
Vessel Types			
buried	VIII-1-89-102	BC89-117	390
chambered	VIII-1-83-132	BC82-298	74
	VIII-1-83-252	BC83-662	142
	VIII-1-86-68	BC85-208	247
	VIII-1-86-195	BC86-361	321
circuit reclosers	VIII-1-86-120	BC87-018	279
connected	VIII-1-83-27	BC80-198	18
embossed assembly	VIII-1-83-333	BC84-125	192
establishing design conditions	VIII-1-86-121	BC84-598	280
exclusion from scope	VIII-1-83-99	BC82-808	57
forged	VIII-1-89-39	BC88-411	360
	VIII-1-89-252	BC90-686	465
	VIII-1-01-137	BC99-102	862
independent	VIII-1-83-03	BC81-260	7
jacketed	VIII-1-83-162	BC83-246	94
	VIII-1-83-230	BC83-110, BC83-298	131
	VIII-1-83-233	BC83-356	132
	VIII-1-83-288	BC84-157	159
	VIII-1-86-127	BC86-285	282
layered construction	VIII-1-83-27R	BC81-100	49
	VIII-1-83-151	BC82-652	89
	VIII-1-83-334	BC84-334	193
	VIII-1-83-354	BC85-028	202
	VIII-1-86-21	BC85-330	220
multilayer vessels	VIII-1-86-59	BC86-201	243
multiple duplicate	VIII-1-83-79	BC82-684	43
	VIII-1-83-360	BC85-187	204
	VIII-1-86-113	BC85-522	277
	VIII-1-86-215	BC88-027	330
	VIII-1-89-94	BC89-081	387
noncircular	VIII-1-83-15	BC82-206	13
	VIII-1-83-230	BC83-110, BC83-298	131
	VIII-1-83-288	BC84-157	159
	VIII-1-83-363	BC84-643	206
	VIII-1-86-09	BC85-285	216
	VIII-1-86-23	BC84-591	221
	VIII-1-86-182	BC87-381	310
unfired steam boilers	VIII-1-86-201	BC87-486	322
	VIII-1-89-45	BC88-139	362
water containing	VIII-1-89-34	BC88-246	358
Visual Examination			
piping	VIII-1-83-180	BC83-311	101
welded joints	VIII-1-89-43	BC88-080	362
	VIII-1-01-58	BC01-295	815
	VIII-1-01-140	BC02-2305	863
Welding			
acceptance criteria	VIII-1-83-87	BC82-828	52
after testing	VIII-1-83-137	BC82-782	76
alignment tolerances	VIII-1-86-90	BC85-255	260
	VIII-1-86-104	BC86-372	267
	VIII-1-98-106	BC99-595	779
	VIII-1-04-07	BC03-933	874
arc	VIII-1-83-145	BC83-200	80
attachments	VIII-1-98-62	BC98-510	753
backing strips	VIII-1-86-116	BC87-005	278
brazing	VIII-1-83-200	BC83-408	112
	VIII-1-83-299	BC83-025	172
	VIII-1-83-312R	BC84-340*	190
build-up	VIII-1-89-179	BC90-262	432
butt	VIII-1-83-80	BC82-719	43
	VIII-1-83-265	BC84-087	148
	VIII-1-89-109	BC89-159	399
	VIII-1-92-112	BC92-352	561
	VIII-1-95-105	BC96-104	681
buttered joints	VIII-1-83-155	BC83-197	91
	VIII-1-98-78	BC99-359	764
calibration of equipment	VIII-1-83-146	BC80-038C	81
categories	VIII-1-83-22	BC82-289	16
	VIII-1-83-34	BC83-264	23
connections	VIII-1-92-205	BC93-775	611
	VIII-1-92-205R	BC93-775*	639
	VIII-1-95-151	BC96-526	707
corner joints	VIII-1-01-41	BC01-223	809
corrosion resistant overlay	VIII-1-83-107	BC82-169	62
different welders	VIII-1-83-86	BC82-813	51
	VIII-1-83-268	BC84-102	149
double weld butt	VIII-1-86-58	BC86-200	243
EGW	VIII-1-86-141	BC87-172	293
	VIII-1-89-129	BC89-118	408
electrodes	VIII-1-86-210	BC87-496	327
FCAW	VIII-1-86-81	BC86-334	256
fillet welds	VIII-1-83-40	BC82-402	25
	VIII-1-83-160	BC83-034	94
	VIII-1-83-173	BC83-261	99
	VIII-1-83-198	BC83-139	111
	VIII-1-83-277	BC84-142	154
	VIII-1-04-43	BC04-1043	891
fittings	VIII-1-89-61	BC88-424	370
flanges	VIII-1-83-303	BC83-359	174
forgings	VIII-1-89-135	BC89-206	410
formed heads	VIII-1-83-65	BC82-293	37
full penetration	VIII-1-83-87	BC82-828	52
	VIII-1-83-89	BC82-685	53
	VIII-1-83-160	BC83-034	94
	VIII-1-83-222	BC83-580	128
	VIII-1-83-290	BC84-174	160

Subject	Interpretation	File No.	Page No.
Welding (Cont'd)			
full penetration (Cont'd)			
	VIII-1-83-294	BC84-228	162
head skirt	VIII-1-83-159	BC83-262	93
head-to-shell	VIII-1-83-196	BC83-019	110
heat affected zone	VIII-1-83-305	BC83-568	175
incomplete fusion	VIII-1-86-28	BC85-289	224
individual welders	VIII-1-83-90	BC82-737	53
jacket attachment	VIII-1-89-55	BC88-392	368
	VIII-1-92-38	BC91-559	527
joint separation	VIII-1-86-04	BC85-227	214
joint design	VIII-1-89-195	BC90-400	437
joint type	VIII-1-83-124	BC82-842	70
lack of fusion	VIII-1-86-39	BC85-610	234
	VIII-1-92-165	BC93-397	591
	VIII-1-92-174	BC93-604	594
lap joints	VIII-1-95-67	BC95-170	656
	VIII-1-98-60	BC97-404	752
longitudinal	VIII-1-83-122	BC82-549	69
marking of material	VIII-1-83-343	BC84-674	197
metal composition	VIII-1-98-75	BC99-107	763
nozzles	VIII-1-86-61	BC86-212	244
	VIII-1-01-139	BC01-774	863
outside organizations	VIII-1-83-147	BC80-173	81
overlap	VIII-1-98-65	BC99-100	754
overlay	VIII-1-83-205	BC83-461	114
partial penetration	VIII-1-83-160	BC83-034	94
personnel	VIII-1-83-204	BC83-453	113
piping	VIII-1-83-152	BC83-167	90
pressure parts	VIII-1-92-26	BC91-229	516
procedure	VIII-1-83-295	BC84-259	162
process	VIII-1-92-35	BC91-100	519
proof test	VIII-1-83-281	BC84-135	156
qualification of welders	VIII-1-83-93	BC82-783	55
	VIII-1-01-51	BC01-215	813
qualified weld procedure	VIII-1-83-38	BC82-357	24
	VIII-1-83-204	BC83-453	113
quality	VIII-1-92-56	BC91-475	534
quality control procedures	VIII-1-83-79	BC82-684	43
	VIII-1-89-247	BC90-689	464
	VIII-1-92-167	BC93-411	592
nonpressure parts	VIII-1-83-297	BC82-122	171
reduction in thickness	VIII-1-83-183	BC83-314	102
reinforcing rings	VIII-1-83-40	BC82-402	25
repairs	VIII-1-83-59	BC81-656	34
	VIII-1-83-60	BC82-659	35
	VIII-1-83-344	BC84-675	198
	VIII-1-86-192	BC85-094B	319
	VIII-1-92-27	BC91-516	516
	VIII-1-92-168	BC93-448	592
	VIII-1-95-83	BC95-389	667
required penetration	VIII-1-83-88	BC82-845	52
requirements	VIII-1-83-31	BC82-196	22
	VIII-1-83-36	BC82-309	24
	VIII-1-04-22	BC03-1492	879
resistance	VIII-1-83-54	BC81-064	31
resistance (Cont'd)			
	VIII-1-86-74	BC86-251	254
SAW	VIII-1-83-88	BC82-845	52
seal welds	VIII-1-89-26	BC88-165	355
socket welds	VIII-1-86-54	BC86-113	241
spiral	VIII-1-83-233	BC83-356	132
square groove penetration	VIII-1-83-88	BC82-845	52
stayed construction	VIII-1-89-253	BC90-484	466
steel plates	VIII-1-92-207	BC94-108	608
stiffening rings	VIII-1-83-325	BC84-545	183
subcontracting of	VIII-1-86-79	BC86-259	256
	VIII-1-89-79	BC89-027	381
surface porosity	VIII-1-89-88	BC86-519	384
tack	VIII-1-83-93	BC82-783	55
	VIII-1-83-151	BC82-652	89
	VIII-1-83-331	BC83-324, BC83-384	192
	VIII-1-86-29	BC85-451	224
	VIII-1-92-110	BC92-349	561
	VIII-1-95-113	BC96-276	688
tensile strength	VIII-1-83-234	BC83-534	133
testing	VIII-1-89-188	BC88-426C	435
test specimens	VIII-1-83-32	BC82-240	22
	VIII-1-89-319	BC91-055	499
tubing	VIII-1-83-152	BC83-167	90
ultrasonic examination	VIII-1-92-58	BC92-057	534
	VIII-1-95-156	BC96-336	709
unalloyed titanium to zirconium	VIII-1-83-178	BC83-304	101
undercut	VIII-1-86-217	BC88-029	330
	VIII-1-95-51	BC95-046	650
valves	VIII-1-83-186R	BC83-071A*	104
weld metal	VIII-1-04-01	BC02-4117	873
weld metal build-up	VIII-1-83-72	BC82-593	40
	VIII-1-04-06	BC03-455	874
with backing strips	VIII-1-82-45	BC81-038	87
with two or more crosses	VIII-1-83-78	BC82-683	42
WPS	VIII-1-83-123	BC82-834	70
	VIII-1-83-297	BC82-122	171
	VIII-1-83-347	BC84-589	199
Welds			
allowable load	VIII-1-95-41	BC94-576	646
attachments	VIII-1-95-112	BC96-256	688
corner joints	VIII-1-01-05	BC00-502	791
	VIII-1-01-79	BC01-408	828
joint category	VIII-1-98-61	BC98-505	753
	VIII-1-98-62	BC98-510	753
joint detail	VIII-1-95-104	BC96-093	680
plug	VIII-1-01-71	BC01-412	822
refractory material	VIII-1-95-92	BC95-204	676
strength	VIII-1-95-91	BC94-664	676
	VIII-1-01-44	BC01-302	810
terminology	VIII-1-95-105	BC96-104	681